VKAP 3.0

ТД Фаворит
г. Бердянск, г.Запорожье
050 603 35 70, 050 50 200 19
favordn@gmail.com
http://tdfavorit.com.ua
http://tdfavorit.zakupka.com

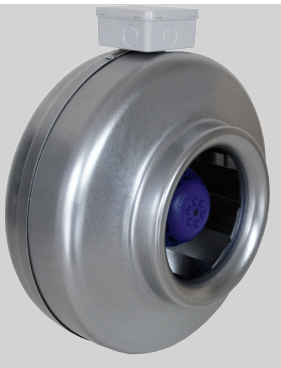

NEW!

ErP 2015

Circular duct fans

Ventilateurs pour gaines circulaires

Rohrventilatoren

Runde kanalventilatorer

Circular duct fans are used for air supply or extract in ventilation and air conditioning systems. These fans are mounted into a system of round air ducts and can be installed in any position. Not suitable for polluted air, aggressive and explosive gases.

Impeller with backward curved blades.

Motor: external rotor, motor protection with built-in thermal-contact with manual reset, maintenance-free ball bearings.

The casing is manufactured from galvanised sheet steel and folded, which ensures high air casing tightness.

All VKAP 3.0 range comply with ERP 2015.

Mounting bracket LAV is included.

Rohrventilatoren für Luftzufuhr oder Extrakt in Lüftungs-und Klimaanlagen eingesetzt. Sind in ein System von Luftkanälen runden montiert. Kann in jeder Position installiert werden. Nicht geeignet für verschmutzte Luft, aggressive und explosive Gase.

Laufrad mit rückwärts gekrümmten Schaufeln.

Motor: Außenläufer, Motorschutz mit integriertem Thermokontakt mit manueller Rückstellung, wartungsfreie Kugellager.

Das Gehäuse besteht aus verzinktem Stahlblech gefaltet und die hohe Luftdichtheit Gehäuse gewährleistet.

Rohrventilatoren Baureihe VKAP 3.0 entspricht der ERP-Richtlinie 2015. Montagewinkel LAV darunter.

Ventilateurs pour gaines destinés aux systèmes de ventilation et de climatisation en montage directe sur conduits d'air circulaires. Utilisation en apport d'air neuf ou extraction d'air vicié. Le produit n'est pas adapté au transport d'air fortement pollué, de gaz agressifs ou explosifs.

Turbine : réaction (pales incurvées vers l'arrière).

Moteur : rotor extérieur, entraînement direct, protection moteur intégrée par thermocontact, roulements à longue durée de vie ne nécessitant pas d'entretien.

Supports de montage LAV.

Runde kanalventilatorer for montage i runde kanalsystemer. Valgfri monteringsposition. Ikke velegnede for uren luft, aggressiv eller eksplosionsfarlig luft.

Ventilatorhjul med bagoverbøjede skovle.

Ekstern rotormotor med indbygget termisk beskyttelse med manuel reset samt vedligeholdelsesfrie kuglelejer.

Serie VKAP 3.0 overholder som minimum ErP 2015

Der medleveres monteringsbeslag, type LAV.

Accessories

Single phase speed controller	Single phase speed controller	Mounting clamp	Guard grille	Back draft shutter	Circular duct silencer
TGRV p. 138	ETY p. 141	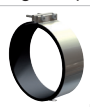 AP p. 152	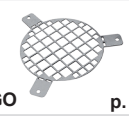 AGO p. 212	RSK p. 205	AKS p. 198

The company reserves the right to make changes of technical data without prior notice

VKAP 3.0

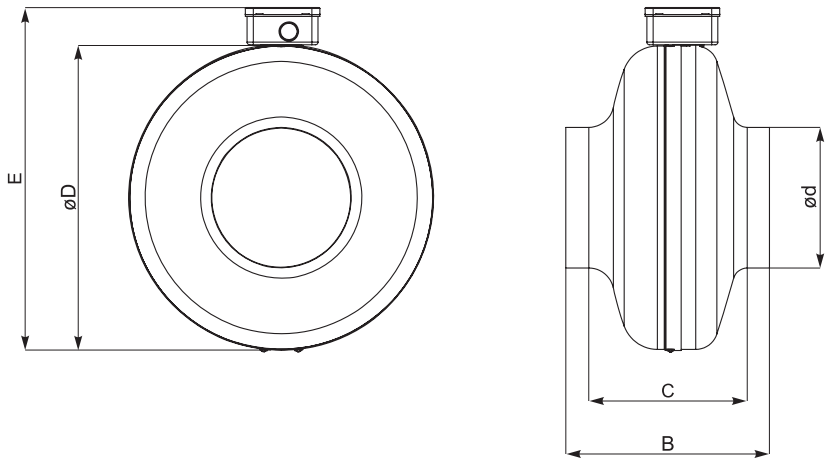

Type	Dimensions [mm]				
	B	C	øD	ød	E
VKAP 100 MD/LD 3.0	189	152	244	100	287
VKAP 125 MD/LD 3.0	182	143	243	125	286
VKAP 150 LD 3.0	217	166	344	150	387
VKAP 160 MD 3.0	189	143	244	160	287
VKAP 160 LD 3.0	217	166	344	160	387
VKAP 200 MD 3.0	219	167	344	200	387
VKAP 200 LD 3.0	231	179	344	200	387
VKAP 250 MD 3.0	223	160	344	250	387
VKAP 250 LD 3.0	230	167	344	250	387
VKAP 315 MD 3.0	243	175	402	315	444
VKAP 315 LD 3.0	256	188	402	315	444

Type	Accessories										
	TGRV	ETY	AP	AGO	RSK	AKS	FD	FDI	EKA	AVS	AVA
VKAP 100 MD/LD 3.0	1,5	1,5	100	100	100	100	100	100	100	100	100
VKAP 125 MD/LD 3.0	1,5	1,5	125	125	125	125	125	125	125	125	125
VKAP 150 LD 3.0	1,5	1,5	150	150	150	150	-	-	-	-	-
VKAP 160 MD 3.0	1,5	1,5	160	160	160	160	160	160	160	160	160
VKAP 160 LD 3.0	1,5	1,5	160	160	160	160	160	160	160	160	160
VKAP 200 MD 3.0	1,5	1,5	200	200	200	200	200	200	200	200	200
VKAP 200 LD 3.0	1,5	1,5	200	200	200	200	200	200	200	200	200
VKAP 250 MD 3.0	1,5	1,5	250	250	250	250	250	250	250	250	250
VKAP 250 LD 3.0	1,5	1,5	250	250	250	250	250	250	250	250	250
VKAP 315 MD 3.0	1,5	1,5	315	315	315	315	315	315	315	315	315
VKAP 315 LD 3.0	1,5	1,5	315	315	315	315	315	315	315	315	315

Accessories

Filter cassette

FD p. 191

Filter cassette

FDI p. 192

Electric duct heater

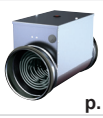

EKA p. 156

Heating coil

AVS p. 174

Duct water cooler

AVA p. 184

The company reserves the right to make changes of technical data without prior notice

VKAP 3.0

VKAP 100 MD 3.0

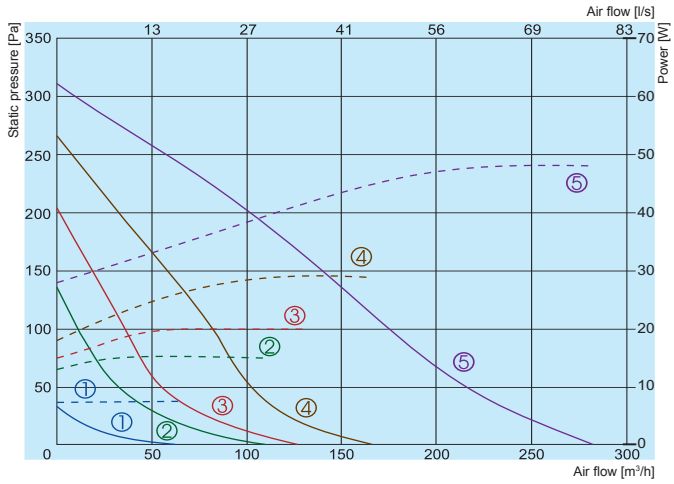

Performance
Power consumption

① 80V
② 120V
③ 140V
④ 170V
⑤ 230V

100 MD 3.0	Lwa total, dB(A)	Lwa, dB(A)						
		125 Hz	250 Hz	500 Hz	1 kHz	2 kHz	4 kHz	8 kHz
Inlet	61	45	57	52	56	51	40	31
Outlet	61	44	58	52	55	50	39	30
Surrounding	46	26	27	36	44	41	30	23

Measured at 200 m³/h, 62 Pa

VKAP 100 LD 3.0

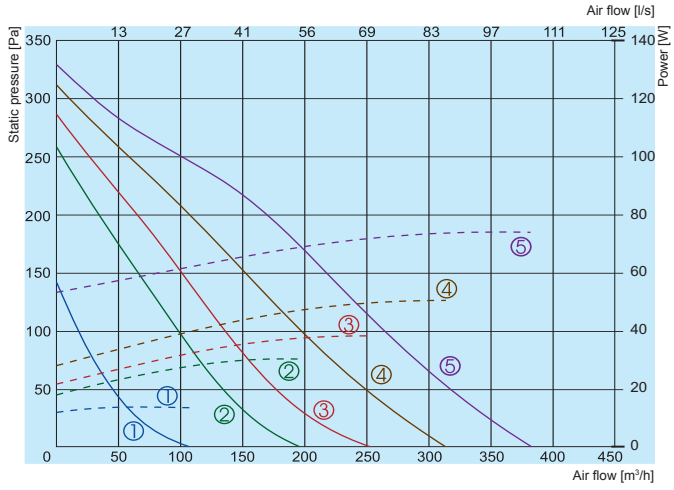

Performance
Power consumption

① 80V
② 120V
③ 140V
④ 170V
⑤ 230V

100 LD 3.0	Lwa total, dB(A)	Lwa, dB(A)						
		125 Hz	250 Hz	500 Hz	1 kHz	2 kHz	4 kHz	8 kHz
Inlet	70	53	58	60	66	65	58	47
Outlet	71	54	60	61	67	66	58	48
Surrounding	61	34	58	44	55	54	47	37

Measured at 257 m³/h, 104 Pa

VKAP 125 MD 3.0

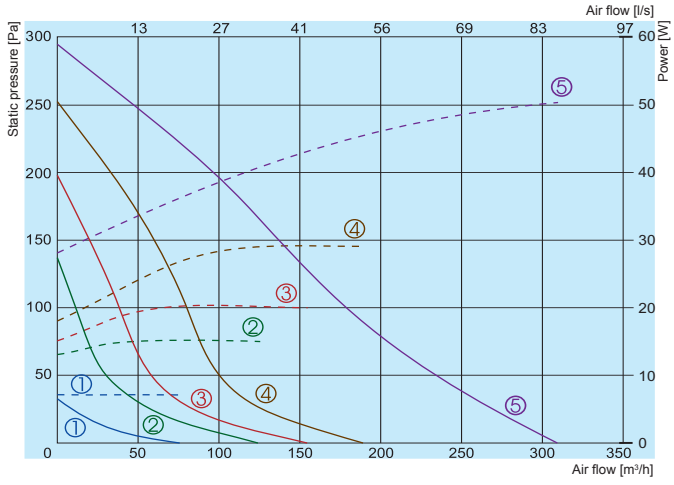

Performance
Power consumption

① 80V
② 120V
③ 140V
④ 170V
⑤ 230V

125 MD 3.0	Lwa total, dB(A)	Lwa, dB(A)						
		125 Hz	250 Hz	500 Hz	1 kHz	2 kHz	4 kHz	8 kHz
Inlet	59	43	52	53	54	51	41	33
Outlet	60	42	53	54	54	52	42	34
Surrounding	45	21	30	36	42	40	29	18

Measured at 191 m³/h, 83 Pa

The fan characteristic curves were determined in accordance with EN ISO 5801. The sound levels were determined in accordance with DIN 45635 resp. ISO 3744 at a distance of 1 m from the fan.

The company reserves the right to make changes of technical data without prior notice

VKAP 125 LD 3.0

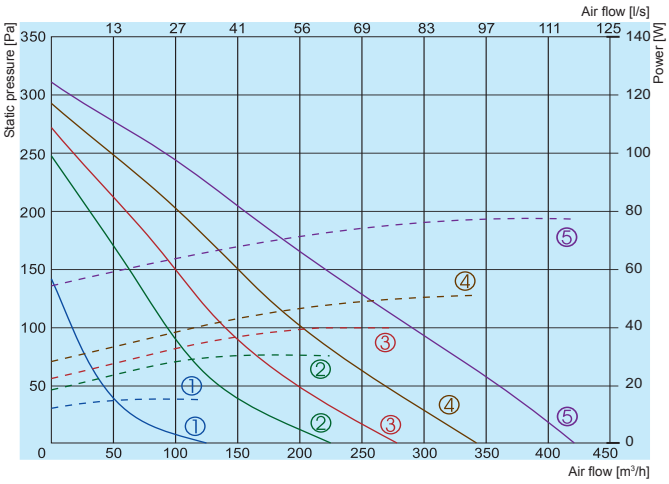

Performance
Power consumption

① 80V
② 120V
③ 140V
④ 170V
⑤ 230V

125 LD 3.0	Lwa total, dB(A)	Lwa, dB(A)						
		125 Hz	250 Hz	500 Hz	1 kHz	2 kHz	4 kHz	8 kHz
Inlet	69	50	54	63	65	64	56	47
Outlet	68	49	53	61	64	63	55	45
Surrounding	56	28	29	45	53	52	44	35

Measured at 280 m³/h, 104 Pa

VKAP 150 LD 3.0

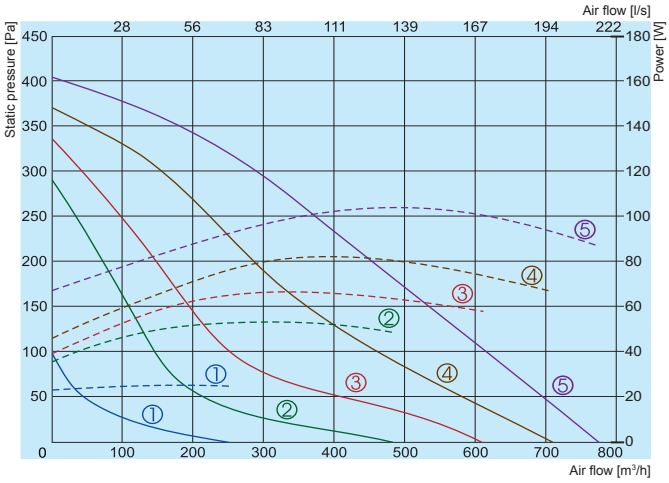

Performance
Power consumption

① 80V
② 120V
③ 140V
④ 170V
⑤ 230V

150 LD 3.0	Lwa total, dB(A)	Lwa, dB(A)						
		125 Hz	250 Hz	500 Hz	1 kHz	2 kHz	4 kHz	8 kHz
Inlet	74	51	66	67	71	62	61	53
Outlet	75	52	67	68	72	64	63	50
Surrounding	62	30	49	51	60	52	50	36

Measured at 595 m³/h, 112 Pa

		100 MD 3.0	100 LD 3.0	125 MD 3.0	125 LD 3.0	150 LD 3.0
Voltage/Frequency	[V/Hz]	230/50	230/50	230/50	230/50	230/50
Power consumption	[kW]	0,048	0,074	0,05	0,077	0,105
Current	[A]	0,2	0,31	0,21	0,32	0,44
Speed	[min⁻¹]	2750	2800	2750	2800	2800
Capacitor	[µF]	4,0	2,0	4,0	2,0	2,0
Max. airflow	[m³/h]	281	379	307	421	773
Max. air temperature	[°C]	40	40	40	40	40
Weight	[kg]	3	3	3	3	3
Wiring diagram		No.2	No.1	No. 2	No.1	No.1
Protection class:	motor	IP-44	IP-44	IP-44	IP-44	IP-44
	terminal box	IP-55	IP-55	IP-55	IP-55	IP-55
Comply with ERP 2015		*	*	*	*	*

* Under 0,125 kW the norms of ErP 2015 are not applicable.

The fan characteristic curves were determined in accordance with EN ISO 5801. The sound levels were determined in accordance with DIN 45635 resp. ISO 3744 at a distance of 1 m from the fan.

VKAP 3.0

VKAP 160 MD 3.0

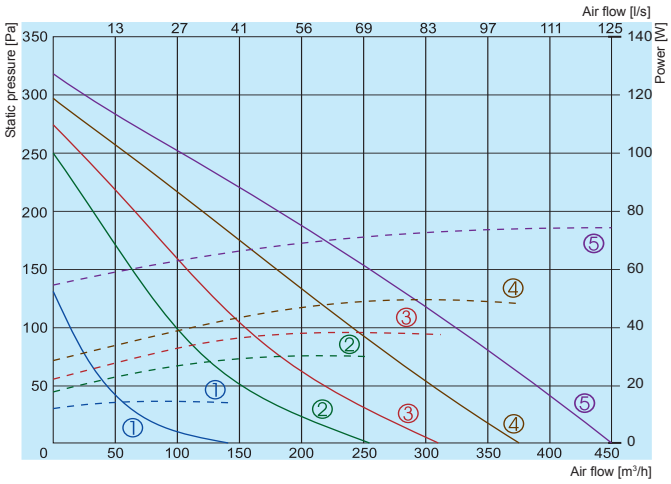

——— Performance
------- Power consumption

① 80V
② 120V
③ 140V
④ 170V
⑤ 230V

160 MD 3.0

	L_{WA} total, dB(A)	Lwa, dB(A)						
		125 Hz	250 Hz	500 Hz	1 kHz	2 kHz	4 kHz	8 kHz
Inlet	68	47	50	56	64	63	61	49
Outlet	69	48	52	57	65	64	63	51
Surrounding	56	26	27	40	53	51	50	35

Measured at 318 m³/h, 103 Pa

VKAP 160 LD 3.0

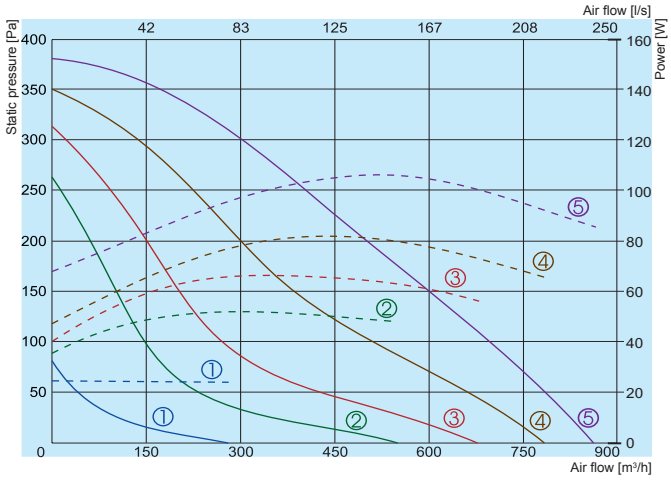

——— Performance
------- Power consumption

① 80V
② 120V
③ 140V
④ 170V
⑤ 230V

160 LD 3.0

	L_{WA} total, dB(A)	Lwa, dB(A)						
		125 Hz	250 Hz	500 Hz	1 kHz	2 kHz	4 kHz	8 kHz
Inlet	74	52	67	68	71	62	62	52
Outlet	75	52	68	68	72	64	63	51
Surrounding	61	31	49	52	59	52	51	36

Measured at 685 m³/h, 104 Pa

VKAP 200 MD 3.0

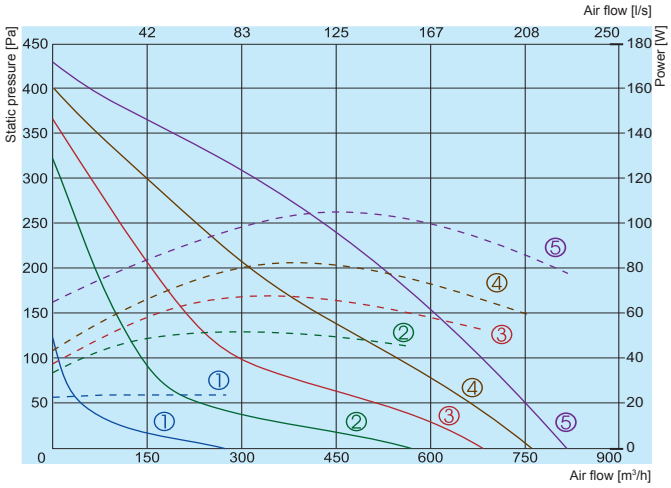

——— Performance
------- Power consumption

① 80V
② 120V
③ 140V
④ 170V
⑤ 230V

200 MD 3.0

	L_{WA} total, dB(A)	Lwa, dB(A)						
		125 Hz	250 Hz	500 Hz	1 kHz	2 kHz	4 kHz	8 kHz
Inlet	70	46	53	62	66	63	64	54
Outlet	71	45	54	61	68	64	65	53
Surrounding	55	22	24	41	49	53	43	40

Measured at 653 m³/h, 125 Pa

The fan characteristic curves were determined in accordance with EN ISO 5801. The sound levels were determined in accordance with DIN 45635 resp. ISO 3744 at a distance of 1 m from the fan.

The company reserves the right to make changes of technical data without prior notice

VKAP 200 LD 3.0

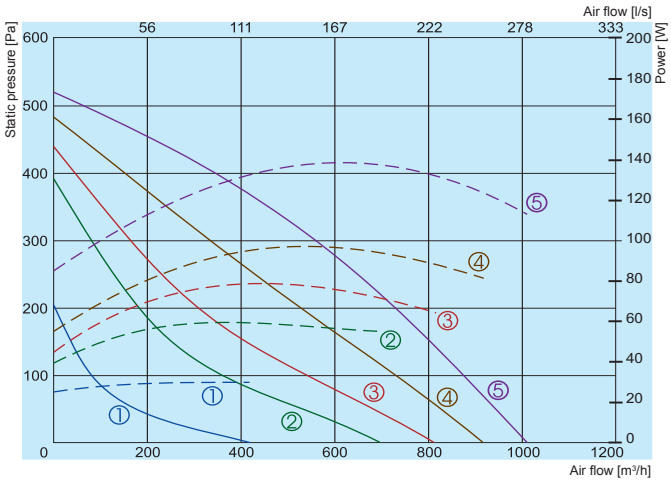

——— Performance
------- Power consumption

① 80V
② 120V
③ 140V
④ 170V
⑤ 230V

200 LD 3.0	Lwa total, dB(A)	Lwa, dB(A)						
		125 Hz	250 Hz	500 Hz	1 kHz	2 kHz	4 kHz	8 kHz
Inlet	73	53	60	66	69	66	65	63
Outlet	74	54	62	65	70	67	67	63
Surrounding	58	25	35	46	53	55	47	45

Measured at 846 m³/h, 123 Pa

		160 MD 3.0	160 LD 3.0	200 MD 3.0	200 LD 3.0
Voltage/Frequency	[V/Hz]	230/50	230/50	230/50	230/50
Power consumption	[kW]	0,075	0,106	0,107	0,135
Current	[A]	0,31	0,45	0,45	0,56
Speed	[min⁻¹]	2800	2800	2600	2660
Max. airflow	[m³/h]	451	866	816	1007
Capacitor	[µF]	2,0	2,0	2,0	4,0
Max. air temperature	[°C]	40	40	40	40
Weight	[kg]	3	4	4	4,7
Wiring diagram		No.1	No.1	No.1	No.1
Protection class:	motor	IP-44	IP-44	IP-44	IP-44
	terminal box	IP-55	IP-55	IP-55	IP-55
Comply with ERP 2015		*	*	*	+

* Under 0,125 kW the norms of ErP 2015 are not applicable.

VKAP 250 MD 3.0

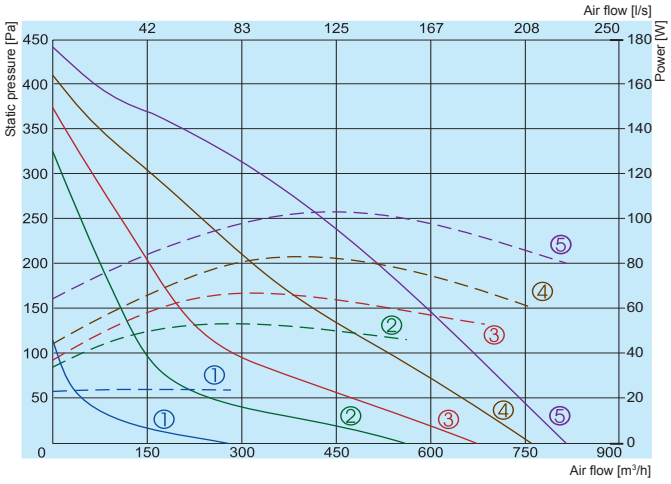

——— Performance
------- Power consumption

① 80V
② 120V
③ 140V
④ 170V
⑤ 230V

250 MD 3.0	Lwa total, dB(A)	Lwa, dB(A)						
		125 Hz	250 Hz	500 Hz	1 kHz	2 kHz	4 kHz	8 kHz
Inlet	71	41	52	61	66	66	64	56
Outlet	72	43	53	60	68	67	65	57
Surrounding	52	24	30	38	48	47	45	40

Measured at 634 m³/h, 125 Pa

The fan characteristic curves were determined in accordance with EN ISO 5801. The sound levels were determined in accordance with DIN 45635 resp. ISO 3744 at a distance of 1 m from the fan.

VKAP 3.0

VKAP 250 LD 3.0

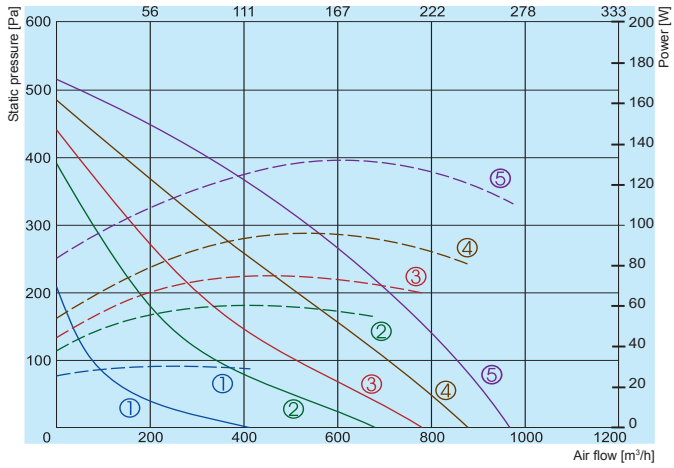

Performance
Power consumption

① 80V
② 120V
③ 140V
④ 170V
⑤ 230V

250 LD 3.0

	Lwa total, dB(A)	Lwa, dB(A)						
		125 Hz	250 Hz	500 Hz	1 kHz	2 kHz	4 kHz	8 kHz
Inlet	74	54	62	67	69	67	67	65
Outlet	75	55	63	66	70	68	67	67
Surrounding	55	33	38	47	50	48	47	46

Measured at 810 m³/h, 123 Pa

VKAP 315 MD 3.0

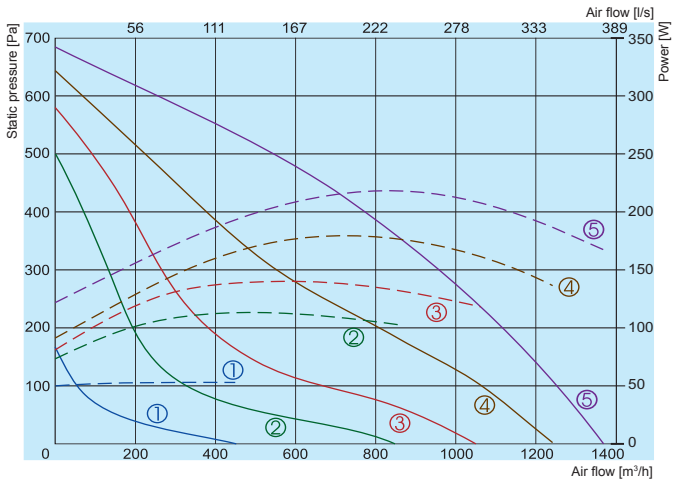

Performance
Power consumption

① 80V
② 120V
③ 140V
④ 170V
⑤ 230V

315 MD 3.0

	Lwa total, dB(A)	Lwa, dB(A)						
		125 Hz	250 Hz	500 Hz	1 kHz	2 kHz	4 kHz	8 kHz
Inlet	78	52	63	71	75	68	65	63
Outlet	79	53	64	71	76	69	68	66
Surrounding	57	35	43	51	53	48	46	43

Measured at 1195 m³/h, 152 Pa

VKAP 315 LD 3.0

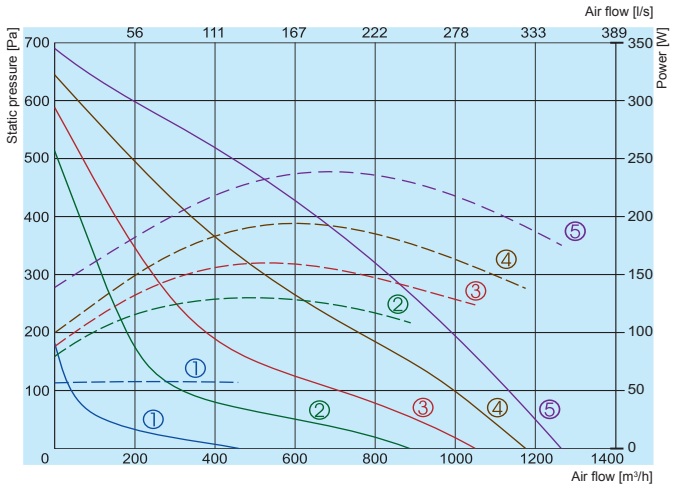

Performance
Power consumption

① 80V
② 120V
③ 140V
④ 170V
⑤ 230V

315 LD 3.0

	Lwa total, dB(A)	Lwa, dB(A)						
		125 Hz	250 Hz	500 Hz	1 kHz	2 kHz	4 kHz	8 kHz
Inlet	73	50	59	67	68	66	65	64
Outlet	74	51	60	66	69	67	66	65
Surrounding	53	33	38	45	48	47	45	43

Measured at 1080 m³/h, 149 Pa

The fan characteristic curves were determined in accordance with EN ISO 5801. The sound levels were determined in accordance with DIN 45635 resp. ISO 3744 at a distance of 1 m from the fan.

The company reserves the right to make changes of technical data without prior notice

		250 MD 3.0	250 LD 3.0	315 MD 3.0	315 LD 3.0
Voltage/Frequency	[V/Hz]	230/50	230/50	230/50	230/50
Power consumption	[kW]	0,106	0,132	0,220	0,238
Current	[A]	0,45	0,56	0,96	1,06
Speed	[min^{-1}]	2600	2460	2567	2600
Capacitor	[µF]	2,0	4,0	5,0	5,0
Max. airflow	[m^3/h]	817	967	1372	1263
Max. air temperature	[°C]	40	40	40	40
Weight	[kg]	4	4,7	5,6	6,0
Wiring diagram		No.1	No.1	No.1	No.1
Protection class:	motor	IP-44	IP-44	IP-44	IP-44
	terminal box	IP-55	IP-55	IP-55	IP-55
Comply with ERP 2015		*	+	+	+

* Under 0,125 kW the norms of ErP 2015 are not applicable.

Wiring diagram No. 1

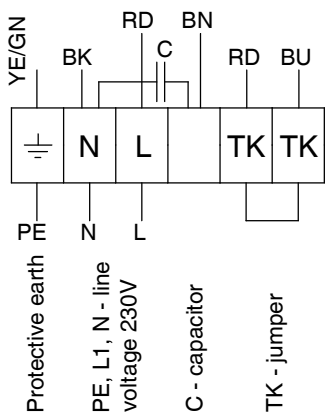

Wiring diagram No. 2

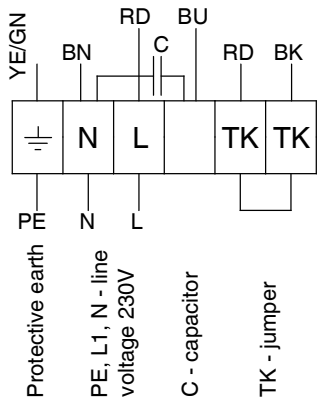

YE/GN - yellow/green
BK - black
RD - red
BN - brown
BU - blue