DEGSON ELECTRONICS CO., LTD.

Product Specification

DG55H-A

Approval	UL	IEC
Electrical		
Standard	**UL**	**IEC**
Rated voltage	300V	450V
Rated current	20A	32A
Wire range	22-12AWG	4.0mm²
With standing voltage	AC2000V/1Min	
Insulation Resistance	500MΩ/DC500V	
Mechanical		
Max. Torque Value	1.2N.m 10.6Lb.in	
Ambient temperature	-40℃~+105℃	
Dimensions		
Pitch	10.0mm(.394″)	
Poles	2P-24P	
Material		
Housing	PA66,UL94V-0	
Terminal	Brass,0.8t,Tin Plated	
Screws	Steel,M4 Ni Plated	

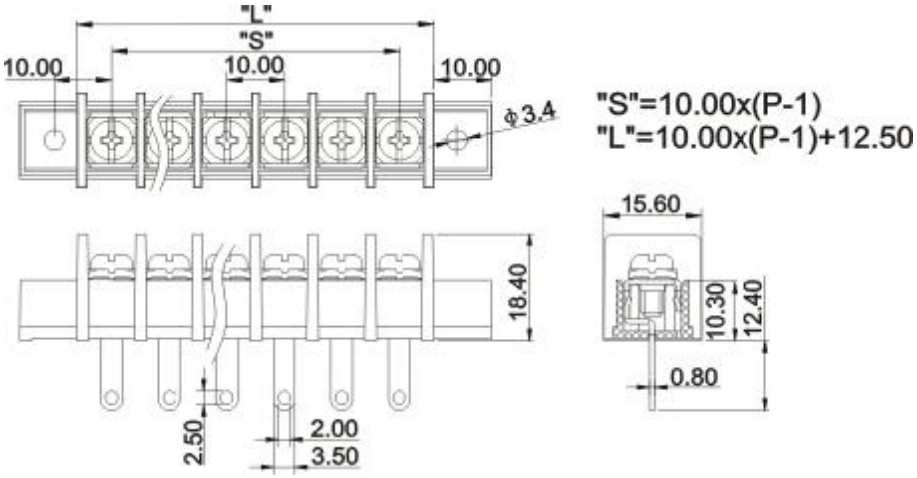

HOW TO ORDER :

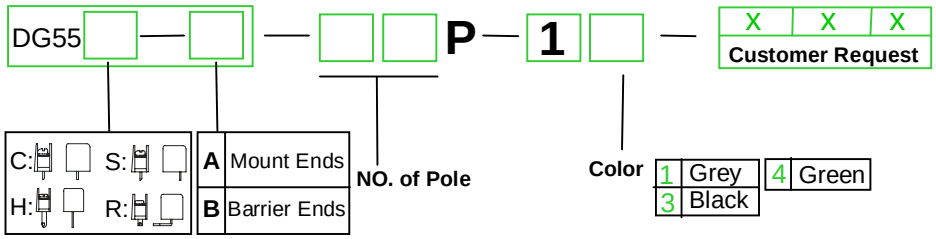

Poles	2	3	4	5	6	7	8	9	10	11	12	13	14	15
L(mm)	22.50	32.50	42.50	52.50	62.50	72.50	82.50	92.50	102.50	112.50	122.50	132.50	142.50	152.50
S(mm)	10.00	20.00	30.00	40.00	50.00	60.00	70.00	80.00	90.00	100.00	110.00	120.00	130.00	140.00

Poles	16	17	18	19	20	21	22	23	24	25	26	27	28	
L(mm)	162.50	172.50	182.50	192.50	202.50	212.50	222.50	232.50	242.50	252.50	262.50			
S(mm)	150.00	160.00	170.00	180.00	190.00	200.00	210.00	220.00	230.00	240.00	250.00			

mm
(INCH)

THIRDANGLE PROJECTION

DEGSON ELECTRONICS CO., LTD.

NAME

DG55H-A