CINTERION
a Gemalto company

AT Command Set

BGS2-E

Version: 00.100
DocId: BGS2-E_ATC_V00.100

Document Name:	**BGS2-E AT Command Set**
Version:	**00.100**
Date:	**November 25, 2010**
DocId:	**BGS2-E_ATC_V00.100**
Status	**Confidential / Preliminary**

GENERAL NOTE
THE USE OF THE PRODUCT INCLUDING THE SOFTWARE AND DOCUMENTATION (THE "PRODUCT") IS SUBJECT TO THE RELEASE NOTE PROVIDED TOGETHER WITH PRODUCT. IN ANY EVENT THE PROVISIONS OF THE RELEASE NOTE SHALL PREVAIL. THIS DOCUMENT CONTAINS INFORMATION ON CINTERION PRODUCTS. THE SPECIFICATIONS IN THIS DOCUMENT ARE SUBJECT TO CHANGE AT CINTERION'S DISCRETION. CINTERION WIRELESS MODULES GMBH GRANTS A NON-EXCLUSIVE RIGHT TO USE THE PRODUCT. THE RECIPIENT SHALL NOT TRANSFER, COPY, MODIFY, TRANSLATE, REVERSE ENGINEER, CREATE DERIVATIVE WORKS; DISASSEMBLE OR DECOMPILE THE PRODUCT OR OTHERWISE USE THE PRODUCT EXCEPT AS SPECIFICALLY AUTHORIZED. THE PRODUCT AND THIS DOCUMENT ARE PROVIDED ON AN "AS IS" BASIS ONLY AND MAY CONTAIN DEFICIENCIES OR INADEQUACIES. TO THE MAXIMUM EXTENT PERMITTED BY APPLICABLE LAW, CINTERION WIRELESS MODULES GMBH DISCLAIMS ALL WARRANTIES AND LIABILITIES. THE RECIPIENT UNDERTAKES FOR AN UNLIMITED PERIOD OF TIME TO OBSERVE SECRECY REGARDING ANY INFORMATION AND DATA PROVIDED TO HIM IN THE CONTEXT OF THE DELIVERY OF THE PRODUCT. THIS GENERAL NOTE SHALL BE GOVERNED AND CONSTRUED ACCORDING TO GERMAN LAW.

Copyright
Transmittal, reproduction, dissemination and/or editing of this document as well as utilization of its contents and communication thereof to others without express authorization are prohibited. Offenders will be held liable for payment of damages. All rights created by patent grant or registration of a utility model or design patent are reserved.

Copyright © 2010, Cinterion Wireless Modules GmbH

Trademark Notice
Microsoft and Windows are either registered trademarks or trademarks of Microsoft Corporation in the United States and/or other countries. All other registered trademarks or trademarks mentioned in this document are property of their respective owners.

Contents

1. Introduction 14
1.1 Scope of the document 14
1.2 Related documents 15
1.3 Document Conventions 16
1.3.1 Quick reference table 16
1.3.2 Superscript notation for parameters and values 17
1.4 AT Command Syntax 18
1.4.1 Using Parameters 18
1.4.2 Concatenating AT Commands 19
1.5 Communication between Customer Application and BGS2-E 20
1.6 Supported character sets 21
1.6.1 GSM alphabet tables and UCS2 character values 22
1.6.2 UCS2 and GSM character coding and conversion 24
1.6.2.1 Output of SIM data (ME to TE) 24
1.6.2.2 Input of SIM data (TE to ME) 25
1.7 Unsolicited Result Code Presentation 26
1.7.1 Common URCs 27
1.8 Errors and Messages 28
1.9 Auxiliary Serial Interface 29
1.10 Serial Interface Flow Control 30
1.10.1 Software Flow Control (XON/OFF Handshake) 30
1.10.2 Hardware Flow Control (RTS/CTS Handshake) 30
1.11 Common PCN Handset Specification (CPHS) 31

2. Configuration Commands 32
2.1 AT&F Reset AT Command Settings to Factory Default Values 32
2.2 AT&V Display current configuration 33
2.2.1 AT&V responses 34
2.3 AT&W Store AT Command Settings to User Defined Profile 36
2.4 ATQ Result Code Presentation Mode 37
2.5 ATV Result code format mode 38
2.5.1 Verbose and numeric result codes 38
2.6 ATX CONNECT Result Code Format 39
2.7 ATZ Restore AT Command Settings from User Defined Profile 40
2.8 AT+CFUN Functionality Level 41
2.8.1 Wake up the ME from SLEEP mode 45
2.9 AT^SMSO Switch Off BGS2-E 46
2.10 AT+GCAP Capabilities List 47
2.11 AT+CMEE Error Message Format 48
2.11.1 CME/CMS Error Code Overview 49
2.12 AT+CSCS Character Set 53
2.13 AT^SCFG Extended Configuration Settings 54
2.14 AT^SM20 Set M20 compatibility mode 65

3. Status Control Commands 66
3.1 AT+CMER Common Event Reporting Configuration 66

3.2 AT+CIND Indicator control ... 68
3.3 AT^SIND Extended Indicator Control ... 71
3.4 AT+CEER Extended Error Report ... 78
3.4.1 Cause Location ID for the extended error report ... 79
3.4.2 Proprietary L2 cause ... 80
3.4.3 GSM release cause for L3 Radio Resource (RR) ... 80
3.4.4 Proprietary release cause for L3 Radio Resource (RR) ... 81
3.4.5 GSM release cause for Mobility Management (MM) or Session Management (SM) ... 81
3.4.6 Proprietary release cause for L3 Mobility Management (MM) ... 82
3.4.7 GSM release cause for L3 Call Control (CC) ... 83
3.4.8 Proprietary release cause for L3 Call Control (CC) ... 84
3.4.9 Proprietary release cause for L3 Advice of Charge (AOC) ... 85
3.4.10 GSM Release cause for Supplementary Service Call ... 85
3.4.11 Proprietary release cause for Call-related Supplementary Services (CRSS) ... 86
3.4.12 Proprietary release cause for Supplementary Services Entity ... 87
3.4.13 Proprietary release cause for Supplementary Services Manager ... 88
3.4.14 Proprietary release cause for GPRS Mobility Management ... 88
3.4.15 Proprietary release cause for Session Management (SM) ... 89
3.4.16 GSM cause for L3 Protocol module or other local cause ... 90
3.4.17 Proprietary release cause for GPRS API ... 90
3.4.18 Proprietary release cause for Link Management ... 90
3.4.19 Proprietary release cause for PPP/IP-Stack ... 91
3.5 ATS18 Extended call release report ... 92
3.6 AT+CPAS Activity Status ... 94
3.7 AT+WS46 Select wireless network ... 95

4. Serial Interface Control Commands ... 96
4.1 AT\Q Flow Control ... 96
4.2 AT&C Set Data Carrier Detect (DCD) Line Mode ... 97
4.3 AT&D Set Data Terminal Ready (DTR) Line Mode ... 98
4.4 AT&S Set Data Set Ready (DSR) Line Mode ... 99
4.5 ATE AT Command Echo ... 100
4.6 AT+ILRR Bit Rate Reporting ... 101
4.7 AT+IPR Bit Rate ... 103
4.7.1 Autobauding ... 104
4.8 AT+CMUX Multiplex mode ... 106
4.8.1 Restrictions on Multiplex mode ... 107

5. Security Commands ... 109
5.1 AT+CPIN PIN Authentication ... 109
5.1.1 What to do if PIN or password authentication fails? ... 111
5.2 AT+CPIN2 PIN2 Authentication ... 113
5.3 AT^SPIC Display PIN counter ... 115
5.4 AT+CLCK Facility lock ... 119
5.5 AT^SLCK Facility lock ... 124
5.6 AT+CPWD Change Password ... 125
5.7 AT^SPWD Change Password ... 129

6. Identification Commands ... 130
6.1 ATI Display product identification information ... 130

6.2 AT+CGMI Request manufacturer identification ... 131
6.3 AT+GMI Request manufacturer identification ... 131
6.4 AT+CGMM Request model identification ... 132
6.5 AT+GMM Request model identification ... 132
6.6 AT+CGMR Request revision identification of software status ... 133
6.7 AT+GMR Request revision identification of software status ... 133
6.8 AT+CGSN Request International Mobile Equipment Identity (IMEI) ... 134
6.9 AT+GSN Request International Mobile Equipment Identity (IMEI) ... 134
6.10 AT+CIMI Request International Mobile Subscriber Identity (IMSI) ... 135

7. Call related Commands ... 136
7.1 Call Status Information ... 136
7.2 ATA Connect to Incoming Call ... 137
7.3 ATD Mobile originated call to specified number ... 138
7.4 ATD><mem><n> Mobile originated call using specific memory and index number ... 140
7.5 ATD><n> Mobile originated call from active memory using index number ... 142
7.6 ATD><str> Mobile originated call from active memory using corresponding field ... 143
7.7 ATDI Mobile originated data call to ISDN number ... 145
7.8 ATDL Redial last number used ... 146
7.9 ATH Disconnect existing connection ... 147
7.10 AT+CHUP Hang up call ... 148
7.11 AT^SHUP Hang up call(s) indicating a specific GSM04.08 release cause ... 149
7.12 ATS0 Set number of rings before automatically answering a call ... 150
7.13 ATS6 Set pause before blind dialing ... 151
7.14 ATS7 Set number of seconds to wait for connection completion ... 152
7.15 ATS8 Comma Dial Pause Time ... 153
7.16 ATS10 Set disconnect delay after indicating the absence of data carrier ... 154
7.17 ATO Switch from command mode to data mode / PPP online mode ... 155
7.18 +++ Escape from Data Mode to AT Command Mode ... 156
7.19 AT+CBST Select Bearer Service Type ... 157
7.20 AT+CRLP Configure RLP Parameters for Outgoing Non-Transparent Data Calls ... 158
7.21 AT+CLCC List of current calls ... 159
7.22 AT^SLCC Extended list of current calls ... 161
7.23 AT+CR Service reporting control ... 166
7.24 AT+CRC Incoming Call Indication Format ... 167
7.25 AT+CSNS Single Numbering Scheme ... 169
7.26 AT^SCNI List Call Number Information ... 170
7.27 AT^SLCD Display Last Call Duration ... 171
7.28 AT^STCD Display Total Call Duration ... 172
7.29 ATP Select pulse dialing ... 173
7.30 ATT Select tone dialing ... 173
7.31 ATS2 Set escape sequence character ... 174

8. Network Service Commands ... 175
8.1 AT+COPN Read operator names ... 175
8.2 AT+COPS Operator Selection ... 176
8.3 AT^SOPS Extended Operator Selection ... 179
8.4 AT^SRPN Replace Operator Names ... 181
8.5 AT+CREG Network registration ... 183
8.6 AT+CSQ Signal quality ... 186

8.7 AT^SMONC Cell Monitoring 187
8.8 AT^SMOND Cell Monitoring 189
8.9 AT^MONI Monitor idle mode and dedicated mode 192
8.9.1 AT^MONI responses 193
8.9.2 Service states 194
8.10 AT^MONP Monitor neighbor cells 195
8.10.1 AT^MONP responses 196
8.11 AT^SMONG Packet Data Monitor 197
8.11.1 AT^SMONG Cell Info Table 198
8.12 AT^SALS Alternate Line Service 199
8.13 AT^SHOM Display Homezone 201
8.14 AT^SPLM Read the PLMN list 202
8.15 AT+CPOL Preferred Operator List 203
8.16 AT^SPLR Read entry from the preferred operators list 204
8.17 AT^SPLW Write an entry to the preferred operators list 205
8.18 AT^SPCL Set Preferred Cell List 206

9. Supplementary Service Commands 208
9.1 AT+CACM Accumulated call meter (ACM) reset or query 208
9.2 AT^SACM Advice of charge and query of ACM and ACMmax 209
9.3 AT+CAMM Accumulated call meter maximum (ACMmax) set or query 211
9.4 AT+CAOC Advice of Charge information 212
9.5 AT+CCUG Closed User Group 213
9.6 AT+CCFC Call forwarding number and conditions control 215
9.7 AT+CCWA Call Waiting 219
9.8 AT+CHLD Call Hold and Multiparty 223
9.9 AT+CLIP Calling Line Identification Presentation 225
9.10 AT+CLIR Calling Line Identification Restriction 227
9.11 AT+COLP Connected Line Identification Presentation 228
9.12 AT+CPUC Price per unit and currency table 230
9.13 AT+CSSN Supplementary service notifications 232
9.14 AT+CUSD Unstructured Supplementary Service Data 234

10. Internet Service Commands 236
10.1 AT^SICS Internet Connection Setup Profile 239
10.1.1 Example: Default values of a CSD connection profile 241
10.1.2 Example: GPRS connection profile 242
10.2 AT^SICI Internet Connection Information 243
10.2.1 Checking Connection Profile Status 244
10.3 AT^SISS Internet Service Setup Profile 246
10.4 AT^SISI Internet Service Information 256
10.5 AT^SISO Internet Service Open 258
10.5.1 Example: Accepting / Rejecting Socket Connection Request from Remote Client 262
10.6 AT^SISC Internet Service Close 264
10.7 AT^SISR Internet Service Read Data 265
10.7.1 Example: Socket Host Reads Small Amounts of UDP Data Packets (URC Mode) 266
10.8 AT^SISW Internet Service Write Data 268
10.8.1 Usage of parameter <eodFlag> 270
10.9 AT^SIST Enter Transparent Access Mode 271
10.10 AT^SISE Internet Service Error Report 273

10.11 Internet Service URC "^SIS" 274
10.11.1 Information Elements Related to the Service Application 275
10.11.2 Information Elements Related to FTP Service 276
10.11.3 Information Elements Related to HTTP Service 277
10.11.4 Information Elements Related to POP3 Service 277
10.11.5 Information Elements Related to SMTP Service 277
10.12 Examples of how to Configure and Use Internet Service Profiles 278
10.12.1 Selecting URC Mode or Polling Mode 278
10.12.2 Configuring Socket Listener 278
10.12.3 Configuring Socket Client for Calling a Socket Listener on Another Host 279
10.12.4 Socket Client Sends Data via TCP Connection (Polling Mode) 279
10.12.5 Socket Client Sends Data via TCP Connection with URCs 280
10.12.6 Configuring and Using FTP Download (URC Mode) 280
10.12.7 Configuring and Using FTP Upload (URC Mode) 281
10.12.8 Configuring SMTP Service Profile 281
10.12.9 Sending Email (URC Mode) 282
10.12.10 Sending Email (Polling Mode) 283
10.12.11 Configuring POP3 Service Profile 284
10.12.12 Retrieving Email (URC Mode) 285
10.12.13 Retrieving Email (Polling Mode) 285
10.12.14 HTTP POST (Polling Mode) 286
10.12.15 HTTP GET (Polling Mode) 287
10.12.16 Creating Transparent TCP Socket Client 288
10.12.17 Opening and Closing Transparent TCP Service 288
10.12.18 Server Disconnects While Transparent TCP Service is in Transparent Access Mode 289
10.12.19 Server Disconnects While Transparent TCP Service is in AT Command Mode 290
10.12.20 Server Disconnects While Transparent TCP Service is in AT Command Mode and Data is Pending 290

11. GPRS Commands 291
11.1 AT+CGACT PDP context activate or deactivate 291
11.2 AT+CGANS Manual response to a network request for PDP context activation 293
11.3 AT+CGATT GPRS attach or detach 295
11.4 AT+CGAUTO Automatic response to a network request for PDP context activation 296
11.5 AT+CGDATA Enter data state 298
11.5.1 Automatic deactivation of PDP context during dial-up PPP 299
11.6 AT+CGDCONT Define PDP Context 300
11.7 AT+CGEQMIN Rel. 99 Quality of Service Profile (Minimum acceptable) 302
11.8 AT+CGEQREQ Rel. 99 Quality of Service Profile (Requested) 306
11.9 AT+CGEREP GPRS event reporting 310
11.10 AT+CGPADDR Show PDP address 312
11.11 AT+CGQMIN Quality of Service Profile (Minimum acceptable) 313
11.12 AT+CGQREQ Quality of Service Profile (Requested) 316
11.13 AT+CGREG GPRS Network Registration Status 319
11.14 AT+CGSMS Select service for MO SMS messages 321
11.15 AT^SGAUTH Set type of authentication for PPP connection 322
11.16 AT^SGCONF Configuration of GPRS related Parameters 323
11.17 ATA Manual acceptance of a network request for PDP context activation 324
11.18 ATD*99# Request GPRS service 325
11.19 ATD*98# Request GPRS IP service 326

11.20 ATH Manual rejection of a network request for PDP context activation 327
11.21 ATS0 Automatic Response to Network Request for PDP Context Activation 328
11.22 Using GPRS AT commands (Examples) 329
11.23 Using the GPRS dial command ATD 331

12. FAX Commands 332
12.1 FAX parameters 332
12.1.1 Summary of Fax Class 2 URCs defined by EIA PN-2388 334
12.2 AT+FBADLIN Bad Line Threshold 335
12.3 AT+FBADMUL Error Threshold Multiplier 336
12.4 AT+FBOR Query data Bit Order 337
12.5 AT+FCIG Query or set the Local Polling ID 338
12.6 AT+FCLASS Fax: Select, read or test service class 339
12.7 AT+FCQ Copy Quality Checking 340
12.8 AT+FCR Capability to Receive 341
12.9 AT+FDCC Query or set capabilities 342
12.10 AT+FDFFC Data Compression Format Conversion 343
12.11 AT+FDIS Query or set session parameters 344
12.12 AT+FDR Begin or continue phase C Data Reception 345
12.13 AT+FDT Data Transmission 346
12.14 AT+FET End a page or document 347
12.15 AT+FK Kill operation, orderly FAX abort 348
12.16 AT+FLID Query or set the Local Id setting capabilities 349
12.17 AT+FMDL Identify Product Model 350
12.18 AT+FMFR Request Manufacturer Identification 351
12.19 AT+FOPT Set bit Order independently 352
12.20 AT+FPHCTO DTE Phase C Response Timeout 353
12.21 AT+FREV Identify Product Revision 354
12.22 AT+FRH Receive Data Using HDLC Framing 355
12.23 AT+FRM Receive Data 356
12.24 AT+FRS Receive Silence 357
12.25 AT+FTH Transmit Data Using HDLC Framing 358
12.26 AT+FTM Transmit Data 359
12.27 AT+FTS Stop Transmission and Wait 360
12.28 AT+FVRFC Vertical Resolution Format Conversion 361

13. Short Message Service (SMS) Commands 362
13.1 SMS Parameters 362
13.2 AT+CMGC Send SMS Command 366
13.3 AT+CMGD Delete short message 367
13.4 AT+CMGF Select SMS message format 368
13.5 AT+CMGL List SMS messages from preferred store 369
13.6 AT+CMGR Read SMS messages 371
13.7 AT+CMGS Send SMS 373
13.8 AT+CMGW Write Short Messages to Memory 375
13.9 AT+CMSS Send short messages from storage 377
13.10 AT+CNMA New Message Acknowledgement to ME/TE 378
13.11 AT+CNMI SMS Event Reporting Configuration 379
13.12 AT+CPMS Preferred SMS message storage 382
13.13 AT+CSCA SMS Service Center Address 384

13.14 AT+CSCB Select Cell Broadcast Message Indication 385
13.15 AT+CSDH Show SMS text mode parameters 386
13.16 AT+CSMP Set SMS text Mode Parameters 387
13.17 AT+CSMS Select Message Service 389
13.18 AT^SLMS List SMS Memory Storage 391
13.19 AT^SMGL List Short Messages from preferred store without setting status to REC READ 392
13.20 AT^SMGO Set or query SMS overflow presentation mode or query SMS overflow 393
13.21 AT^SMGR Read short message without setting status to REC READ 395
13.22 AT^SSCONF SMS Command Configuration 396
13.23 AT^SSDA Set SMS Display Availability 397
13.24 AT^SSMSS Set Short Message Storage Sequence 398

14. SIM related Commands 399
14.1 AT+CRSM Restricted SIM Access 399
14.2 AT+CSIM Generic SIM Access 401
14.3 AT+CXXCID Display card ID 403
14.4 AT^SCID Display SIM card identification number 404
14.5 AT^SCKS Query SIM and Chip Card Holder Status 405
14.6 AT^SSET SIM Data Ready Indication 407
14.7 AT^SXSM Extended SIM Access 408

15. SIM Application Toolkit (SAT) Commands 410
15.1 Usage of Remote-SAT 412
15.1.1 Automatic Response Mode (AR Mode) 412
15.1.2 Explicit Response Mode (ER Mode) 412
15.1.3 Character Sets 412
15.1.4 SIM Update Initiated by the Network 412
15.1.5 Icon Handling 413
15.1.6 Using SMS Related AT Commands 413
15.2 Remote-SAT States 414
15.2.1 Remote-SAT State Transition Diagram 415
15.2.2 Remote-SAT State Transition Table 416
15.3 Remote-SAT Command Types 418
15.4 AT^SSTA Remote-SAT Interface Activation 419
15.5 ^SSTN SAT Notification 421
15.6 AT^SSTGI SAT Get Information 423
15.7 AT^SSTGI SAT Get Information - Refresh (1) 424
15.8 AT^SSTGI SAT Get Information - Set Up Event List (5) 426
15.9 AT^SSTGI SAT Get Information - Set Up Call (16) 427
15.10 AT^SSTGI SAT Get Information - Send SS (17) 429
15.11 AT^SSTGI SAT Get Information - Send USSD (18) 430
15.12 AT^SSTGI SAT Get Information - Send Short Message (19) 431
15.13 AT^SSTGI SAT Get Information - Send DTMF (20) 432
15.14 AT^SSTGI SAT Get Information - Launch Browser (21) 433
15.15 AT^SSTGI SAT Get Information - Play Tone (32) 435
15.16 AT^SSTGI SAT Get Information - Display Text (33) 437
15.17 AT^SSTGI SAT Get Information - Get Inkey (34) 439
15.18 AT^SSTGI SAT Get Information - Get Input (35) 441
15.19 AT^SSTGI SAT Get Information - Select Item (36) 443
15.20 AT^SSTGI SAT Get Information - Set up Menu (37) 445

15.21 AT^SSTGI SAT Get Information - Set up Idle Mode Text (40) ... 447
15.22 AT^SSTGI SAT Get Information - Language Notification (53) ... 448
15.23 AT^SSTR SAT Response ... 449
15.24 AT^SSTR SAT Response - Refresh (1) ... 451
15.25 AT^SSTR SAT Response - Set Up Event List (5) ... 452
15.26 AT^SSTR SAT Response - Set Up Call (16) ... 453
15.27 AT^SSTR SAT Response - Send SS (17) ... 454
15.28 AT^SSTR SAT Response - Send USSD (18) ... 455
15.29 AT^SSTR SAT Response - Send Short Message (19) ... 456
15.30 AT^SSTR SAT Response - Send DTMF (20) ... 457
15.31 AT^SSTR SAT Response - Launch Browser (21) ... 458
15.32 AT^SSTR SAT Response - Play Tone (32) ... 459
15.33 AT^SSTR SAT Response - Display Text (33) ... 460
15.34 AT^SSTR SAT Response - Get Inkey (34) ... 461
15.35 AT^SSTR SAT Response - Get Input (35) ... 463
15.36 AT^SSTR SAT Response - Select Item (36) ... 464
15.37 AT^SSTR SAT Response - Setup Menu (37) ... 465
15.38 AT^SSTR SAT Response - Set Up Idle Mode Text (40) ... 466
15.39 AT^SSTR SAT Response - Language Notification (53) ... 467
15.40 AT^SSTR SAT Event - Menu Selection (211) ... 468
15.41 AT^SSTR SAT Event - User Activity (232) ... 469
15.42 AT^SSTR SAT Event - Idle Screen Available (233) ... 470
15.43 AT^SSTR SAT Event - Language Selection (235) ... 471
15.44 AT^SSTR SAT Event - Browser Termination (236) ... 472
15.45 AT^SSTR SAT Event - Terminate Command (254) ... 473
15.46 Examples for Using Remote-SAT ... 474

16. Phonebook Commands ... 477
16.1 Sort Order for Phonebooks ... 477
16.2 AT+CPBR Read from Phonebook ... 478
16.3 AT+CPBS Select phonebook memory storage ... 481
16.4 AT+CPBW Write into Phonebook ... 483
16.5 AT^SPBC Find first matching entry in sorted phonebook ... 486
16.6 AT^SPBD Purge phonebook memory storage ... 487
16.7 AT^SPBG Display phonebook entries in alphabetical order ... 488
16.8 AT^SPBS Step through the selected phonebook alphabetically ... 491
16.9 AT+CNUM Read own numbers ... 495
16.10 AT^SDLD Delete the 'last number redial' memory ... 496

17. Audio Commands ... 497
17.1 Audio programming model ... 497
17.2 ATL Set monitor speaker loudness ... 498
17.3 ATM Set monitor speaker mode ... 498
17.4 AT+CLVL Loudspeaker volume level ... 499
17.5 AT+CMUT Mute control ... 500
17.6 AT+VTD Tone duration ... 501
17.7 AT+VTS DTMF and tone generation ... 502
17.8 AT^SNFA Set or query of microphone attenuation ... 503
17.9 AT^SNFD Set audio parameters to manufacturer default values ... 505
17.10 AT^SNFG Generate Tone ... 506

17.11 AT^SNFI Set microphone path parameters 508
17.12 AT^SNFM Set microphone audio path and power supply 509
17.13 AT^SNFO Set audio output (= loudspeaker path) parameter 511
17.14 AT^SNFPT Set progress tones 513
17.15 AT^SNFS Select audio hardware set 514
17.16 AT^SNFTTY Signal TTY/CTM audio mode capability 516
17.17 AT^SNFV Set loudspeaker volume 518
17.18 AT^SNFW Write audio setting in non-volatile store 519
17.19 AT^SRTC Ring tone configuration 520

18. Hardware related Commands 522
18.1 AT+CCLK Real Time Clock 522
18.2 AT+CALA Alarm Configuration 523
18.3 AT^SBV Battery/Supply Voltage 526
18.4 AT^SSYNC Configure SYNC Pin 527
18.4.1 ME status indicated by status LED patterns 527
18.5 AT^SCTM Critical Operating Temperature Monitoring 529
18.5.1 Deferred shutdown 530
18.6 AT^SRADC Configure and Read ADC Measurement 532
18.7 AT^SSPI Serial Protocol Interface 535
18.7.1 Transmitting Data over AT Interface 536
18.7.1.1 Structure of Messages on the I²C Bus 538
18.7.2 Example: Using I²C Bus 540
18.8 AT^SWDAC PWM Signal Configuration for DAC 542

19. GPIO Commands 544
19.1 AT^SPIO General Purpose IO Driver Open/Close 544
19.1.1 GPIO configuration table 545
19.2 AT^SCPIN Pin Configuration 546
19.3 AT^SGIO Get IO state of a specified pin 548
19.4 AT^SSIO Set IO state of a specified pin 549

20. Miscellaneous Commands 550
20.1 A/ Repeat Previous Command Line 550
20.2 ATS3 Command Line Termination 551
20.3 ATS4 Response Formatting 552
20.4 ATS5 Command Line Editing 553
20.5 AT^SFDL Firmware Download 554

21. Appendix 555
21.1 Restricted access to SIM data after SIM PIN authentication 555
21.2 Star-Hash (*#) Network Commands 556
21.3 Available AT Commands and Dependency on SIM PIN 559
21.4 Availability of AT Commands Depending on Operating Mode of ME 567
21.5 AT Command Settings storable with AT&W 575
21.6 Factory Default Settings Restorable with AT&F 578
21.7 Summary of Unsolicited Result Codes (URC) 581
21.8 Alphabetical List of AT Commands 584

List of Tables

Table 1.1: Symbols used to mark the type of parameters ... 17
Table 1.2: Symbols used to indicate the correlations with other commands ... 17
Table 1.3: Symbols used to mark different types of default values of parameters ... 17
Table 1.4: Types of AT commands and responses ... 18
Table 1.5: Exemplary escape sequences generated by BGS2-E for its non-UCS2 output ... 21
Table 2.1: Current configuration on ASC0 / MUX channel 1 (example) ... 34
Table 2.2: Current configuration on ASC1 and MUX channels 2 and 3 (example) ... 35
Table 2.3: Wake-up events in NON-CYCLIC and CYCLIC SLEEP modes ... 45
Table 2.4: General "CME ERROR" Codes (GSM 07.07) ... 49
Table 2.5: General "CME ERROR" Codes (proprietary) ... 50
Table 2.6: GPRS related "CME ERROR" Codes (GSM 07.07) ... 50
Table 2.7: SMS related "CMS ERROR" Codes (GSM 07.05) ... 50
Table 4.1: Availability of AT Commands on Virtual Channels ... 107
Table 4.2: Summary of AT commands with Different Behavior in Multiplex mode ... 107
Table 10.1: Applicability of AT^SICS <conParmTag> values ... 239
Table 10.2: Applicability of AT^SISS <srvParmTag> values ... 246
Table 12.1: Summary of Fax Class 2 URCs defined by EIA PN-2388 ... 334
Table 15.1: State: RESET description ... 416
Table 15.2: State: OFF description ... 416
Table 15.3: State: IDLE description ... 416
Table 15.4: State: PAC description ... 417
Table 15.5: State: WAIT description ... 417
Table 15.6: Command Type Table ... 418
Table 18.1: Modes of the LED and indicated ME functions ... 528
Table 18.2: Frame characters and channel close characters specific to ASCII mode ... 537
Table 18.3: Frame characters and channel close characters specific to Transparent mode ... 537
Table 18.4: Response characters valid for ASCII mode and Transparent mode: ... 537
Table 18.5: Structure of Request and Response frames on the I²C bus in ASCII mode ... 538
Table 18.6: Structure of Request and Response frames on the I²C bus in Transparent mode ... 539
Table 21.1: Star-Hash (*#) Command Overview ... 556
Table 21.2: Abbreviations of Codes and Parameters used in Table 21.1 ... 557
Table 21.3: Star-Hash Command Response Parameters ... 558
Table 21.4: Star-Hash Commands for Supplementary Services ... 558
Table 21.5: Available AT Commands and Dependency on SIM PIN ... 559
Table 21.6: Availability of AT Commands Depending on Operating Mode of ME ... 567
Table 21.7: Settings Stored to User Profile on ASC0 / MUX Channel 1 ... 575
Table 21.8: Settings Stored to User Profile on ASC1 / MUX Channels 2 and 3 ... 576
Table 21.9: Factory Default Settings Restorable with AT&F ... 578
Table 21.10: Summary of Unsolicited Result Codes (URC) ... 581
Table 21.11: Alphabetical List of AT Commands ... 584

List of Figures

Figure 1.1: Main character table of GSM 03.38 alphabet 22
Figure 1.2: Extension character table of GSM 03.38 alphabet 23
Figure 15.1: Remote-SAT Context Diagram 411
Figure 15.2: Remote-SAT State Transition Diagram 415
Figure 17.1: Audio programming model for BGS2-E Module 497

1. Introduction

1.1 Scope of the document

This document presents the AT Command Set for
BGS2-E GSM Mobile Engine, Release 00.100.

Before using the BGS2-E or upgrading to a new firmware version please read the latest product information provided in "BGS2-E Release Notes, Version 00.100".

More information is available at http://www.cinterion.com.

1.2 Related documents

[1] BGS2-E Release Notes, Version 00.100

[2] BGS2-E Hardware Interface Description, Version 00.100

[3] GPRS Startup User's Guide

[4] Multiplexer User's Guide

[5] 3GPP TS 27.010 (GSM 07.10): Terminal Equipment to User Equipment (TE-UE) multiplexer protocol

[6] Multiplex Driver Developer's Guide

[7] Multiplex Driver Installation Guide

[8] Application Note 02: Audio Interface Design

[9] Application Note 16: Updating BGS2-E Firmware

[10] Application Note 22: Using TTY / CTM equipment with BGS2-E

[11] Application Note 24: Application Developer's Guide

[12] ISO/IEC10646: "Universal Multiple-Octet Coded Character Set (UCS)"; UCS2, 16 bit coding

[13] ITU-T Recommendation V.24: List of definitions for interchange circuits between data terminal equipment (DTE) and data circuit-terminating equipment (DCE)

[14] ITU-T Recommendation V.250: Serial asynchronous automatic dialling and control

[15] 3GPP TS 100 918/EN 300 918 (GSM 02.04): General on supplementary services

[16] 3GPP TS 100 907 (GSM 02.30): Man-Machine Interface (MMI) of the Mobile Station (MS)

[17] 3GPP TS 23.038 (GSM 03.38): Alphabets and language specific information

[18] 3GPP TS 27.005 (GSM 07.05): Use of Data Terminal Equipment - Data Circuit terminating Equipment (DTE - DCE) interface for Short Message Service (SMS) and Cell Broadcast Service (CBS)

[19] 3GPP TS 27.007 (GSM 07.07): AT command set for User Equipment (UE)

[20] 3GPP TS 27.060 (GSM 07.60): Mobile Station (MS) supporting Packet Switched Services

[21] 3GPP TS 51.011 (GSM 11.11): Specification of the Subscriber Identity Module - Mobile Equipment (SIM - ME) interface

[22] 3GPP TS 11.14 (GSM 11.14): Specification of the SIM Application Toolkit for the Subscriber Identity Module - Mobile Equipment (SIM - ME) interface

[23] 3GPP TS 22.101 (GSM 22.101): Service principles

[24] Common PCN Handset Specification (CPHS) v4.2

1.3 Document Conventions

Throughout this document BGS2-E is also referred to as GSM Mobile Engine or short ME, MS (Mobile Station) or Mobile Terminal (MT). In related documents the equivalent terms DCE (Data Communication Equipment), facsimile DCE or FAX modem may be found.
AT commands are used to control the BGS2-E. The controlling device is referred to as Customer Application or short TE. Related documents may use the equivalent term DTE (Data Terminal Equipment).
All abbreviations and acronyms used throughout this document are based on GSM or 3GPP specifications. For additional definitions please refer to TR 100 350 V7.0.0 (1999-08), (GSM 01.04, version 7.0.0 release 1998).

1.3.1 Quick reference table

Each AT command description includes a table similar to the example shown below. The table is intended as a quick reference to indicate the following functions:

PIN: Is the AT command PIN protected?
- **+** Yes
- **-** No
- **±** Usage is dependent on conditions specified for the command, or not all command types are PIN protected (for example write command PIN protected, read command not).

Note: The table provided in Section 21.3, `Available AT Commands and Dependency on SIM PIN` uses the same symbols.

ASC0: Is the AT command supported on the first physical serial interface ASC0?
- **+** Yes
- **-** No

ASC1: Is the AT command supported on the second physical serial interface ASC1?
- **+** Yes
- **-** No

MUXn: Is the AT command usable on the Multiplexer channels MUX1, MUX2, MUX3?
- **+** Yes
- **-** No
- **±** AT command is usable, but under the restrictions specified in the section related to the command.

Note: Columns MUX1, MUX2 and MUX3 are relevant only if the GSM Mobile Engine operates in Multiplex mode, that is, if the first physical serial interface is partitioned into 3 virtual channels by using the Multiplexer protocol. Command usage is the same on ASC0 and MUX1.

🔔 Is the AT command supported in ALARM mode?
- **+** Yes
- **-** No
- **±** AT command is usable, but under the restrictions specified in the section related to the command.

Last: If commands are concatenated, this AT command must be the last one.
- **+** Yes
- **-** No

Note: See also Section 1.4, AT Command Syntax for details on concatenated AT commands.

Example:

PIN	ASC0	ASC1	MUX1	MUX2	MUX3	🔔	Last
-	+	+	±	±	±	-	-

1.3.2 Superscript notation for parameters and values

Table 1.1: Symbols used to mark the type of parameters

Parameter type	Meaning
<param>$^{(num)}$	Parameter value must be numeric type
<param>$^{(str)}$	Parameter value must be string type

Table 1.2: Symbols used to indicate the correlations with other commands

Parameter option	Meaning
<param>$^{(\&W)}$	Parameter value will be stored with AT&W
<param>$^{(\&V)}$	Parameter value will be displayed with AT&V
<param>$^{(\^SNFW)}$	Parameter value will be stored with AT^SNFW
<param>$^{(+CSCS)}$	Parameter value has to be (is) coded according to current setting of <chset> (see AT+CSCS for details)

Table 1.3: Symbols used to mark different types of default values of parameters

Value option	Meaning
[x]	Default value: if the parameter is omitted, the value 'x' will be assumed
x$^{(\&F)}$	Factory default value, will be restored to 'x' with AT&F
x$^{(P)}$	Powerup default value of a parameter which is not stored at power down
x$^{(D)}$	Delivery default value of a parameter which cannot be restored automatically

1.4 AT Command Syntax

The "AT" or "at" prefix must be set at the beginning of each command line. To terminate a command line enter <CR>. Commands are usually followed by a response that includes "<CR><LF><response><CR><LF>". Throughout this document, only the responses are presented, <CR><LF> are omitted intentionally.

Table 1.4: Types of AT commands and responses

AT command type	Syntax	Function
Test command	AT+CXXX=?	The mobile equipment returns the list of parameters and value ranges set with the corresponding Write command or by internal processes.
Read command	AT+CXXX?	This command returns the currently set value of the parameter or parameters.
Write command	AT+CXXX=<...>	This command sets user-definable parameter values.
Exec(ution) command	AT+CXXX	The execution command reads non-variable parameters determined by internal processes in the GSM engine.

1.4.1 Using Parameters

- Optional parameters are enclosed in square brackets. If optional parameters are omitted, the current settings are used until you change them.
- Optional parameters or subparameters can be omitted unless they are followed by other parameters. If you want to omit a parameter in the middle of a string it must be replaced by a comma. See also example 1.
- A parameter value enclosed in square brackets represents the value that will be used if an optional parameter is omitted. See also example 2.
- When the parameter is a character string, e.g. <text> or <number>, the string must be enclosed in quotation marks, e.g. "Charlie Brown" or "+49030xxxx". Symbols in quotation marks will be recognized as strings.
- All spaces will be ignored when using strings without quotation marks.
- It is possible to omit the leading zeros of strings which represent numbers.
- If an optional parameter of a V.250 command is omitted, its value is assumed to be 0.

Example 1: Omitting parameters in the middle of a string

```
AT+CCUG?                    Query current setting
+CCUG: 1,10,1
OK
AT+CCUG=,9                  Set only the middle parameter
OK
AT+CCUG?                    Query new setting
+CCUG: 1,9,1
OK
```

Example 2: Using default parameter values for optional parameters

```
AT+CFUN=7,0                 Activate CYCLIC SLEEP mode, don't reset ME
OK
AT+CFUN?                    Query ME mode
+CFUN: 7
OK
AT+CFUN=                    Set ME back to normal (default parameters: 1,0)
OK
+CFUN: 1
OK
```

1.4.2 Concatenating AT Commands

Concatenating AT commands on the same line is possible, though not recommended because of restrictions listed below (for more details see [14]).
When concatenating AT commands you need to enter the "AT" or "at" prefix only once at the beginning of a command line. Basic commands (i.e., V.250 commands) are concatenated without delimiter. Extended commands (i.e., commands starting with AT+ or AT^) use a semicolon as delimiter.

Disadvantages and restrictions:

- There is no way to control the minimum time to wait between finishing an AT command and sending the next one. Please refer to Section 1.5, Communication between Customer Application and BGS2-E for details about timing.
- The sequence of processing the AT commands may be different from the sequential order of command input.
- Many AT commands cannot be concatenated (see list below). Concatenating these commands might end up with an error result code, or leads to an unexpected order of responses.

AT command type	Comment
V.250 commands	Cannot be concatenated with FAX commands (prefix AT+F)
GSM 7.07 commands	Cannot be concatenated with extended commands (prefix AT^S)
GSM 7.05 commands (SMS)	To be used standalone
Commands starting with AT&	To be used standalone
AT+IPR	To be used standalone

1.5 Communication between Customer Application and BGS2-E

Leaving hardware flow control unconsidered the Customer Application (TE) is coupled with the BGS2-E (ME) via a receive and a transmit line.
Since both lines are driven by independent devices collisions may (and will) happen. For example, if the TE issues an AT command the BGS2-E starts sending a URC. This will probably cause the TE to misinterpret the URC being part of the AT command's response. To avoid this conflict the following measures must be taken:

- If an AT command is finished (with "OK" or "ERROR") the TE shall always wait at least 100 ms before sending the next one. This applies to bit rates of 9600 bps or higher (see AT+IPR). At bit rates below 9600 bps the delay must be longer: 300 ms at 1200 bps, and 500 ms at 300 bps.
  The pause between two AT commands gives the BGS2-E the opportunity to the transmission of pending URCs and get necessary service.
- The TE shall communicate with the BGS2-E using activated echo (ATE1), i.e. the BGS2-E echoes characters received from the TE.
  Hence, when the TE receives the echo of the first character "A" of the AT command just sent by itself it has control both over the receive and the transmit paths.

Using Backspace at command line:

- As the standard GSM alphabet does not provide a backspace functionality the BGS2-E is designed to use the character "08" (hex 0x08) as backspace for command line input. This allows the user to easily erase the last character when writing an AT command. On the other hand, this solution requires entering the escape sequence \08 for writing the "ò" character in GSM character string parameters.
- If command echo is enabled (ATE1) Backspace may cause 08 - 32 - 08 (decimal) character sequence or no echo, depending on serial interface and speed of character input.

Software flow control:

- Regardless of the selected alphabet, keep in mind that, when using software flow control (AT\Q1), character values 17 and 19 (decimal) are interpreted as XON/XOFF control characters.

1.6 Supported character sets

BGS2-E supports two character sets: *GSM 03.38* (7 bit, also referred to as GSM alphabet or SMS alphabet) and *UCS2* (16 bit, refer to ISO/IEC 10646). See AT+CSCS for information about selecting the character set. Character tables can be found below.

Explanation of terms

- Escape sequence
  The escape sequence used within a text coded in the GSM default alphabet (0x1B) must be correctly interpreted by the TE, both for character input and output. To the BGS2-E, an escape sequence appears like any other byte received or sent.
- TE Character Set
  The character set currently used by the Customer Application is selected with AT+CSCS. It is recommended to select UCS2 setting.
- Data Coding Scheme (DCS)
  DCS is part of a short message and is saved on the SIM. When writing a short message to the SIM in text mode, the DCS stored with AT+CSMP is used and determines the coded character set.

When you enter characters that are not valid characters of the supported alphabets the behavior is undefined.
If GSM alphabet is selected, all characters sent over the serial line (between TE and ME) must be in the range from 0 to 127 (7 bit range).
Note: If the ME is configured for GSM alphabet, but the Customer Application (TE) uses ASCII, bear in mind that some characters have different code values, such as the following:

- "@" character with GSM alphabet value 0 is not displayable by an ASCII terminal program, e.g. Microsoft© Hyperterminal®.
- "@" character with GSM alphabet value 0 will terminate any C string! This is because value 0 is defined as C string end tag. Therefore, the GSM Null character will cause problems on application level when using 'C'-functions, e.g. "strlen()". Using an escape sequence as shown in the table below solves the problem. By the way, this may be the reason why even network providers sometimes replace '@' with "@=*" in their SIM application.
- Some other characters of the GSM alphabet may be misinterpreted by an ASCII terminal program. For example, GSM "ö" (as in "Börse") is assumed to be "|" in ASCII, thus resulting in "B|rse". This is because in both alphabets there are different characters assigned to value 7C (hexadecimal).

If the TE sends characters differently coded or undefined in ASCII or GSM (e.g. Ä, Ö, Ü) it is possible to use escape sequences. The ME's input parser translates the escape sequence to the corresponding GSM character value.

Note:
The ME also uses escape sequences for its non-UCS2 output: Quotation mark (") and the escape character itself (\, respectively Ö in GSM alphabet) are converted, as well as all characters with a value below 32 (hexadecimal 0x20).
Hence, the input parser of the Customer Application needs to be able to translate escape sequences back to the corresponding character of the currently used alphabet.

Table 1.5: Exemplary escape sequences generated by BGS2-E for its non-UCS2 output

Character Value	ASCII Character	GSM 03.38 Character	UCS2 Character	Escape Sequence	Numeric Escape Sequence
0x5C	\	Ö	00D6	\5C	0x5C 0x35 0x43
0x22	"	"	0022	\22	0x5C 0x32 0x32
0x00	NULL	@	n/a	\00	0x5C 0x30 0x30

Usually terminal programs are not able to recognize escape sequences, and thus, handle them as normal characters.
To prevent misinterpretation of control characters or special characters it is recommended to always use USC2 alphabet and PDU mode.

1.6.1 GSM alphabet tables and UCS2 character values

This section provides tables for the GSM 03.38 alphabet supported by the BGS2-E. Below any GSM character find the corresponding two byte character value of the UCS2 alphabet. The related mapping information is available at http://www.unicode.org/Public/MAPPINGS/ETSI/GSM0338.TXT.

Main character table of GSM 03.38 alphabet				b7	0	0	0	0	1	1	1	1
				b6	0	0	1	1	0	0	1	1
				b5	0	1	0	1	0	1	0	1
b4	b3	b2	b1		0	1	2	3	4	5	6	7
0	0	0	0	0	@ 0040	Δ 0394	SP 0020	0 0030	¡ 00A1	P 0050	¿ 00BF	p 0070
0	0	0	1	1	£ 00A3	_ 005F	! 0021	1 0031	A 0041	Q 0051	a 0061	q 0071
0	0	1	0	2	$ 0024	Φ 03A6	" 0022	2 0032	B 0042	R 0052	b 0062	r 0072
0	0	1	1	3	¥ 00A5	Γ 0393	# 0023	3 0033	C 0043	S 0053	c 0063	s 0073
0	1	0	0	4	è 00E8	Λ 039B	¤ 00A4	4 0034	D 0044	T 0054	d 0064	t 0074
0	1	0	1	5	é 00E9	Ω 03A9	% 0025	5 0035	E 0045	U 0055	e 0065	u 0075
0	1	1	0	6	ù 00F9	Π 03A0	& 0026	6 0036	F 0046	V 0056	f 0066	v 0076
0	1	1	1	7	ì 00EC	Ψ 03A8	' 0027	7 0037	G 0047	W 0057	g 0067	w 0077
1	0	0	0	8	ò 00F2 3)	Σ 03A3	(0028	8 0038	H 0048	X 0058	h 0068	x 0078
1	0	0	1	9	ç 00E7	Θ 0398	) 0029	9 0039	I 0049	Y 0059	i 0069	y 0079
1	0	1	0	10 /A	LF [LF] 2)	Ξ 039E	* 002A	: 003A	J 004A	Z 005A	j 006A	z 007A
1	0	1	1	11 /B	Ø 00D8	1)	+ 002B	; 003B	K 004B	Ä 00C4	k 006B	ä 00E4
1	1	0	0	12 /C	ø 00F8	Æ 00C6	, 002C	< 003C	L 004C	Ö 00D6	l 006C	ö 00F6
1	1	0	1	13 /D	CR [CR] 2)	æ 00E6	- 002D	= 003D	M 004D	Ñ 00D1	m 006D	ñ 00F1
1	1	1	0	14 /E	Å 00C5	ß 00DF	. 002E	> 003E	N 004E	Ü 00DC	n 006E	ü 00FC
1	1	1	1	15 /F	å 00E5	É 00C9	/ 002F	? 003F	O 004F	§ 00A7	o 006F	à 00E0

Figure 1.1: Main character table of GSM 03.38 alphabet

1) This code is an escape to the following extension of the 7 bit default alphabet table.
2) This code is not a printable character and therefore not defined for the UCS2 alphabet. It shall be treated as the accompanying control character.
3) See Section 1.5, Communication between Customer Application and BGS2-E for further details on using backspace and "ò" character.

Extension character table of GSM 03.38 alphabet				b7	0	0	0	0	1	1	1	1
				b6	0	0	1	1	0	0	1	1
				b5	0	1	0	1	0	1	0	1
b4	b3	b2	b1		0	1	2	3	4	5	6	7
0	0	0	0	0					| 007C			
0	0	0	1	1								
0	0	1	0	2								
0	0	1	1	3								
0	1	0	0	4		^ 005E						
0	1	0	1	5							€ 20AC	
0	1	1	0	6								
0	1	1	1	7								
1	0	0	0	8			{ 007B					
1	0	0	1	9			} 007D					
1	0	1	0	10 /A	[LF]							
1	0	1	1	11 /B								
1	1	0	0	12 /C				[005B				
1	1	0	1	13 /D				~ 007E				
1	1	1	0	14 /E				] 005D				
1	1	1	1	15 /F			\ 005C					

Figure 1.2: Extension character table of GSM 03.38 alphabet

1) This code value is reserved for the extension to another extension table. On receipt of this code, a receiving entity shall display a space until another extension table is defined.
2) This code represents the EURO currency symbol. The code value is the one used for the character 'e'. Therefore a receiving entity which is incapable of displaying the EURO currency symbol will display the character 'e' instead.
3) This code is defined as a Page Break character and may be used for example in compressed CBS messages. Any mobile which does not understand the 7 bit default alphabet table extension mechanism will treat this character as Line Feed.

If the Customer Application receives a code where a symbol is not represented in Figure 1.2, Extension character table of GSM 03.38 alphabet it shall display the character shown in the main default 7 bit alphabet table (see Figure 1.1, Main character table of GSM 03.38 alphabet).

1.6.2 UCS2 and GSM character coding and conversion

This section provides basic information on how to handle input and output character conversion, e.g. for SMS text mode and Remote SAT, if the character representation of ME and Customer Application differ, i.e. if the Data Coding Scheme and the TE character set use different mappings.

1.6.2.1 Output of SIM data (ME to TE)

Used character set	DCS = 7 bit GSM	DCS = 8 bit Data	DCS = 16 bit UCS2
GSM	Case 1 GSM (1:1)	Case 2 8 bit to IRA (1:2)	Case 3 UCS2 to IRA (2:4)
UCS2	Case 4 GSM to IRA (1:4)	Case 5 8 bit to IRA (1:4)	Case 6 UCS2 to IRA (2:4)

Note: The ratio of SIM bytes to output bytes is given in parentheses.

Case 1
Every GSM character is sent to the TE as it is (8-bit value with highest bit set to zero).
Example: 47'H, 53'H, 4D'H → 47'H, 53'H, 4D'H, displayed as "GSM"

Case 2
Every data byte is sent to the TE as 2 IRA characters each representing a halfbyte.
Example: B8'H (184 decimal) → 42'H, 38'H, displayed as "B8"

Case 3
Every 16-bit UCS2 value is sent to the TE as 4 IRA characters.
Example: C4xA7'H (50343 decimal) → 43'H, 34'H, 41'H, 37'H, displayed as "C4A7"
Problem: An odd number of bytes leads to an error because there are always two bytes needed for each USC2 character

Case 4
Every GSM character is sent to the TE as 4 IRA characters to show UCS2 in text mode.
Example: 41'H ("A") → 30'H, 30'H, 34'H, 31'H, displayed as "0041"

Case 5
Every data byte is sent to the TE as IRA representation of UCS2 (similar to case 4).
Example: B2'H → 30'H, 30'H, 42'H, 32'H, displayed as "00B2"

Case 6
Every 16-bit value is sent to the TE as IRA representation of it. It is assumed that number of bytes is even.
Example: C3x46'H → 43'H, 33'H, 34'H, 36'H, displayed as "C346"

1.6.2.2 Input of SIM data (TE to ME)

Used character set	DCS = 7 bit GSM	DCS = 8 bit Data	DCS = 16 bit UCS2
GSM	Case 1 GSM (1:1)	Case 2 IRA to 8 bit (2:1)	Case 3 IRA to 16 bit (4:2)
UCS2	Case 4 UCS2 to GSM (4:1)	Case 5 UCS2 to 8 bit (4:1)	Case 6 UCS2 to 16 bit (4:2)

Note: The ratio between the number of input characters and bytes stored on the SIM is given in parentheses.

Case 1
Every character is sent from TE to ME as GSM character (or ASCII with standard terminal emulation, e.g. Hyperterminal®).
Character value must be in range from 0 to 127 because of 7-bit GSM alphabet.
To reach maximum SMS text length of 160 characters in 140 bytes space characters will be compressed on SIM. This must be set using the parameter <dcs> of AT+CSMP (add 64).
Example: "ABCDEFGH" typed is sent and stored uncompressed as → 4142434445464748'H (stored compressed as 41E19058341E91'H)

Case 2
Every data byte is sent as 2 IRA characters.
Maximum text length is 280 IRA characters which will be converted into 140 bytes SMS binary user data
Example: "C8" typed is sent as 43'H, 38'H → stored as C8'H

Case 3
Every 16-bit value is sent as 4 IRA characters.
Maximum text length is 280 IRA characters which will be converted into 70 UCS2 characters (16-bit each)
Number of IRA characters must be a multiple of four because always 4 half bytes are needed for a 16-bit value
Example: "D2C8" typed is sent as 44'H, 32'H, 43'H, 38'H → stored as D2C8'H

Case 4
Every GSM character is sent as 4 IRA characters representing one UCS2 character.
Example: To store text "ABC" using UCS2 character set you have to type "004100420043".
This is sent as 30'H,30'H,34'H,31'H, 30'H,30'H,34'H,32'H, 30'H,30'H,34'H,33'H → detected as IRA representation of 3 UCS2 characters, converted to GSM character set and stored as 41'H, 42'H, 43'H.
Maximum input is 640 IRA characters repesenting 160 UCS2 characters when compression is active. These are converted to 160 GSM 7-bit characters.
Without compression only 140 GSM characters can be stored which are put in as 560 IRA characters.
Values of UCS2 characters must be smaller than 80'H (128 decimal) to be valid GSM characters.
Number of IRA characters must be a multiple of four. Problems:
- "41" → Error, there are four IRA characters (two bytes) needed
- "0000" → Error, not an UCS2 character
- "4142" → Error, value of UCS2 character > 7F'H
- "008B" → Error, value of UCS2 character > 7F'H
  This affects the maximum input length of a string)

Case 5
Every UCS2 character is sent as 4 IRA characters and is converted into two 8-bit values. This means that the first two characters have to be '00'.
Example: UCS2 character 009F'H typed as "009F" is sent as 30'H,30'H,39'H,46'H → converted into 8-bit value 9F'H.
Maximum number of UCS2 characters is 140 which are represented by 560 IRA characters. Number of IRA characters must be a multiple of four.

Case 6
Every UCS2 character is sent as 4 IRA characters each and is converted into a 16-bit value again.
Example: UCS2 character 9F3A'H typed as "9F3A" is sent as 39'H,46'H,33'H,41'H → converted into 9F3A'H.
Maximum number of UCS2 characters is 70 which are represented by 280 IRA characters. Number of IRA characters must be a multiple of four.
Invalid UCS2 values must be prevented.

1.7 Unsolicited Result Code Presentation

URC stands for Unsolicited Result Code and is a report message issued by the ME without being requested by the TE, i.e. an URC is issued automatically when a certain event occurs. Hence, an URC is not issued as part of the response related to an executed AT command.
Typical events leading to URCs are incoming calls ("RING"), waiting calls, received short messages, changes in temperature, network registration etc.
For most of these messages, the ME needs to be configured whether or not to send a URC. Descriptions of these URCs are provided with the associated AT command. URCs which are not user definable are described in Section 1.7.1, Common URCs. A summary of all URCs can be found in Section 21.7, Summary of Unsolicited Result Codes (URC).

To announce a pending URC transmission the ME will do the following:

- The ME activates its RING line (logic "1") for 1 second, i.e. the RING line changes to the physical "Low" level. This allows the TE to stay in power saving mode until a ME related event requests service.
  If several URCs occur coincidently or in quick succession each URC triggers the RING line independently, although the line will not be deactivated between each URC. As a result, the RING line may stay low for more than 1 second.
  If an incoming call is answered within less than 1 second (with ATA or if autoanswering is set to ATS0=1) than the RING line will be deactivated earlier.
  The "^SHUTDOWN" URC will not activate the RING line.
- If the AT command interface is busy a "BREAK" will be sent immediately but the URC will not be issued until the line is free. This may happen if the URC is pending in the following cases:
  - During the processing of an AT command (i.e. the time after the TE echoes back the first character "A" of an AT command just sent by itself until the ME responds with "OK" or "ERROR").
  - During a data call.

  Please note that AT command settings may be necessary to enable in-band signaling, e.g. refer to AT+CMER or AT+CNMI.

It is strongly recommended to use the multiplex mode to map logical communication channels onto the serial line of the BGS2-E, for details refer to [4] and AT command AT+CMUX. Doing so it is possible to use one channel to still process URCs while having a data call active on another.
For most of these messages, the ME needs to be configured whether or not to send an URC. Depending on the AT command, the URC presentation mode can be saved to the user defined profile (see AT&W), or needs to be activated every time you reboot the ME. Several URCs are not user definable, such as "^SYSSTART", "^SYSSTART <text>", "^SHUTDOWN" and the Fax Class 2 URCs listed in Section 12.1, FAX parameters.
If autobauding is enabled (as factory default mode or set with AT+IPR=0), URCs generated after restart will be output with 57600 bps until the ME has detected the current bit rate. The URCs "^SYSSTART", "^SYSSTART <text>", however, are not presented at all. For details please refer to Section 4.7.1, Autobauding. To avoid problems we recommend to configure a fixed bit rate rather than using autobauding.

1.7.1 Common URCs

This section contains all URCs not associated to a certain AT command. They cannot be defined by the user and appear automatically when the voltage conditions described below occur. Please refer to [2] for specifications regarding the minimum and maximum operating voltage limits. The automatic shutdown procedure is usually equivalent to the power-down initiated with the AT^SMSO command.

URC 1

^SBC: Undervoltage

The URC indicates that the ME is close to the undervoltage threshold. The URC appears only once. If the voltage continues to decrease until it drops below the threshold a controlled shutdown will be initiated.

URC 2

^SBC: Overvoltage

The URC indicates that the ME is close to the overvoltage threshold. The URC appears only once. If the voltage continues to increase until it crosses the threshold a controlled shutdown will be initiated.

1.8 Errors and Messages

The command result codes "+CME ERROR: <err>" and "+CMS ERROR: <err>" indicate errors related to mobile equipment or network functionality.

The format of <err> can be either numeric or verbose and is selectable via AT+CMEE.

A result error code terminates the execution of the command and prevents the execution of all remaining commands that may follow on the same command line. If so, neither "ERROR" nor "OK" result codes are returned for these commands. A 30 seconds timeout will deliver "ERROR" when the input of a command is not complete.

Using the wrong command syntax may result in errors: For example, using the execute command syntax although the command has no execute format, causes "ERROR" to be returned. Likewise, using the write command syntax although the command has no write format causes "+CME ERROR: <err>" to be returned.

See also:

- Section 2.11.1, CME/CMS Error Code Overview
- Section 2.5.1, Verbose and numeric result codes
- Section 3.4, AT+CEER

1.9 Auxiliary Serial Interface

The second serial interface (ASC1) is designed as an additional interface for applications which need multiple parallel access to the BGS2-E, e.g. to query status information while a data connection is in progress on ASC0. However, the auxiliary interface provides only limited functionality:

- Multiplex mode via AT+CMUX is not supported.
- DTR, DSR, DCD, RING hardware lines do not exist. AT commands for controlling the behavior of these lines (AT&D, AT&C, AT&S) are not allowed and return ERROR.
- No CSD calls, so all related AT commands cannot be used and return ERROR, such as AT+CBST, ATS7, AT+CRLP.
- No fax calls, so all AT+F commands cannot be used and return ERROR.
- When you set up packet switched connections take care that your application uses only AT commands, parameters and signal lines supported on the ASC1 interface. For example, keep in mind that Microsoft Dial-up connections are typically trying to request the DCD line status and that common modem drivers use to send commands such as AT+CBST or ATS7, which may not be supported.
- No Autobauding. The hardware is not capable of automatically detecting the baudrate on this interface, so the AT command which selects autobauding (AT+IPR=0) is not allowed and returns ERROR.

ASC1 is disabled when the multiplexer is enabled on the first serial interface ASC0. Yet, both ASC1 and the multiplexer channel 2 are using the same parameters, and thus, the same user defined profile (if any). As a result, a user profile stored on multiplexer channel 2 takes effect on ASC1 after closing the multiplexer and starting up ASC1. Likewise, a user profile stored on ASC1 will be loaded on multiplexer channel 2.
This may be a problem when ASC1 is not connected, but flow control (for example AT\Q1 or AT\Q3) is stored to the user profile on the multiplexer channel 2. In this case, flow control takes effect on ASC1, when the multiplexer is switched off. If then for example a large amount of URCs is generated, their transmission might be stopped due to the flow control. To avoid this problem we recommend that you do not activate flow control on multiplexer channel 2 when you set up a user profile with AT&W.

1.10 Serial Interface Flow Control

Flow control is essential to prevent loss of data or avoid errors when, in a data or fax call, the sending device is transferring data faster than the receiving side is ready to accept. When the receiving buffer reaches its capacity, the receiving device should be capable to cause the sending device to pause until it catches up.
There are basically two approaches to regulate data flow: Software flow control and hardware flow control. The High Watermark (HWM) of the input/output buffer should be set to approximately 60% of the total buffer size, the Low Watermark (LWM) is recommended to be about 30%. The data flow should be stopped when the buffer capacity rises close to the High Watermark and resumed when it drops below the Low Watermark. The time required to cause stop and go results in a hysteresis between the High and Low Watermarks.

1.10.1 Software Flow Control (XON/OFF Handshake)

Software flow control can be used to control the data flow in both directions, from Customer Application to BGS2-E and vice versa, i.e. ME to TE. Software flow control uses different characters to stop (XOFF, decimal 19) and resume (XON, decimal 17) data flow. Hence, all data that represent XON or XOFF characters will be interpreted as control characters. This applies also to characters included within the data stream to be transmitted (usually plain ASCII text files do not inlude such characters). The only advantage of software flow control is that three wires would be sufficient on the serial interface.

1.10.2 Hardware Flow Control (RTS/CTS Handshake)

Hardware flow control sets or resets the RTS/CTS wires. This approach is faster and more reliable, and therefore, the better choice. When the HWM is reached, CTS is set inactive. When the LWM is passed, CTS goes active again. To achieve smooth data flow, ensure that the RTS/CTS lines are present on your application platform.

Configuring hardware flow control

- Hardware flow control must be set on both sides: with AT\Q3 in the ME and an equivalent RTS/CTS handshake option in the host application.
- The default setting of the ME is AT\Q0 (no flow control) which must be altered to AT\Q3 (RTS/CTS hardware handshake on). The setting is stored volatile and must be restored each time after rebooting the ME.
- AT\Q has no read command. To verify the current setting of AT\Q, simply check the settings of the active profile with AT&V.
- Often, fax programs run an intialization procedure when started up. The intialization commonly includes enabling RTS/CTS hardware handshake, eliminating the need to set AT\Q3 once again. However, before setting up a CSD call, you are advised to check that RTS/CTS handshake is set.

Buffer design considerations

- After deactivating the RTS line, the ME may still send up to 264 bytes (worst case). This can be easily handled if the buffer of the host application is sufficiently sized, and if a hysteresis is implemented regarding its Rx buffer. For host applications that are required to handle a large amount of data at high speed, a total buffer capacity of 512 bytes is recommended.

1.11 Common PCN Handset Specification (CPHS)

The ME provides features to implement a device following the prerequisites of the Common PCN Handset Specification (CPHS) Phase 2.

CPHS Feature	Description/Remarks	AT command
Alternate Line Service	Using two phone numbers with one SIM card.	AT^SALS
Voice Message Waiting Indication	Indicate the receipt of a short message coded as Voice Message Waiting Indicator as defined by the CPHS Phase 2 standard.	AT^SIND, AT+CMER, indicators "vmwait1" and "vmwait2"
Operator (Service provider) name from SIM	Read specific Elementary Files (6F14h, 6F18h) from SIM.	AT+CRSM
Network and Service Provider Lock	Lock/Unlock an ME to specific HPLMN and service provider.	AT+CLCK, (AT+CPIN)
Call Forwarding	Get and set diverted call status. Access specific Elementary File (6F13h) from SIM.	AT+CCFC, AT+CRSM
Customer Service Profile (CSP)	Setting services and their menu entries depending on customer profiles.	AT+CRSM
Information numbers	Hierarchically structured service numbers phonebook on SIM according to CPHS 4.2 (mandatory).	AT+CRSM

2. Configuration Commands

The AT Commands described in this chapter allow the external application to determine the BGS2-E's behaviour under various conditions.

2.1 AT&F Reset AT Command Settings to Factory Default Values

AT&F resets AT command settings to their factory default values.
Every ongoing or incoming call will be terminated.
For a list of affected parameters refer to Section 21.6, Factory Default Settings Restorable with AT&F.

Syntax

Exec Command
AT&F[<value>]
Response(s)
OK

PIN	ASC0	ASC1	MUX1	MUX2	MUX3		Last
-	+	+	+	+	+	-	-

Reference(s)
V.250

Parameter Description

<value>(num)	
[0]	Reset parameters in Section 21.6, Factory Default Settings Restorable with AT&F to their factory default values.

2.2 AT&V Display current configuration

AT&V returns the current parameter setting. The configuration varies depending on whether or not PIN authentication has been done and whether or not Multiplex mode is enabled (see AT+CMUX).

Syntax

Exec Command

AT&V[<value>]

Response(s)

ACTIVE PROFILE:
... (see Section 2.2.1, AT&V responses)
OK

PIN	ASC0	ASC1	MUX1	MUX2	MUX3	🔔	Last
-	+	±	+	±	±	-	-

Reference(s)

V.250

Parameter Description

<value>(num)

[0] Profile number

Notes

- The parameters of AT^SMGO can only be displayed after the SMS data from the SIM have been read successfully for the first time. Reading starts after successful SIM authentication has been performed, and may take up to 30 seconds depending on the SIM used. While the read process is in progress, an attempt to read the parameter will result in empty values.
- The parameter of AT+CSDH will only be displayed in SMS PDU mode, see AT+CMGF.

2.2.1 AT&V responses

The following tables show four different kinds of responses depending on whether or not the PIN is entered and whether or not the Multiplex mode is enabled (see AT+CMUX).

Table 2.1: Current configuration on ASC0 / MUX channel 1 (example)

PIN authentication done	No PIN authentication
ACTIVE PROFILE: E1 Q0 V1 X4 &C1 &D2 &S0 \Q0 S0:000 S3:013 S4:010 S5:008 S6:000 S7:060 S8:000 S10:002 S18:000 +CBST: 7,0,1 +CRLP: 61,61,78,6 +CR: 0 +FCLASS: 0 +CRC: 0 +CMGF: 1 +CSDH: 0 +CNMI: 0,0,0,0,1 +ILRR: 0 +IPR: 57600 +CMEE: 2 ^SMGO: 0,0 +CSMS: 0,1,1,1 ^SACM: 0,"000000","000000" ^SLCC: 0 ^SCKS: 0,1 ^SSET: 0 +CREG: 0,1 +CLIP: 0,2 +CAOC: 0 +COPS: 0,0,"operator" +CGSMS: 3 OK	ACTIVE PROFILE: E1 Q0 V1 X4 &C1 &D2 &S0 \Q0 S0:000 S3:013 S4:010 S5:008 S6:000 S7:060 S8:000 S10:002 S18:000 +CBST: 7,0,1 +CRLP: 61,61,78,6 +CR: 0 +FCLASS: 0 +ILRR: 0 +IPR: 57600 +CMEE: 2 ^SCKS: 0,1 ^SSET: 0 OK

Table 2.2: Current configuration on ASC1 and MUX channels 2 and 3 (example)

PIN authentication done	No PIN authentication
ACTIVE PROFILE: E1 Q0 V1 X4 &C1 &D0 &S0 \Q0 S0:000 S3:013 S4:010 S5:008 +CR: 0 +CRC: 0 +CMGF: 1 +CSDH: 0 +CNMI: 0,0,0,0,1 +ILRR: 0 +IPR: 57600 +CMEE: 2 ^SMGO: 0,0 +CSMS: 0,1,1,1 ^SACM: 0,"000000","000000" ^SLCC: 0 ^SCKS: 0,1 ^SSET: 0 +CREG: 0,1 +CLIP: 0,2 +CAOC: 0 +COPS: 0,0,"operator" +CGSMS: 3 OK	ACTIVE PROFILE: E1 Q0 V1 X4 &C1 &D0 &S0 \Q0 S0:000 S3:013 S4:010 S5:008 +CR: 0 +ILRR: 0 +IPR: 57600 +CMEE: 2 ^SCKS: 0,1 ^SSET: 0 +CGSMS: 3 OK

2.3 AT&W Store AT Command Settings to User Defined Profile

AT&W stores the current AT command settings to a user defined profile in non-volatile memory of BGS2-E. The AT command settings will automatically be restored from the user defined profile during power-up or if ATZ is used. AT&F restores AT command factory default settings. Hence, until first use of AT&W, ATZ works as AT&F. A list of parameters stored to the user profile can be found at Section 21.5, AT Command Settings storable with AT&W.

Syntax

Exec Command
AT&W[<value>]
Response(s)
OK ERROR +CME ERROR: <err>

PIN	ASC0	ASC1	MUX1	MUX2	MUX3		Last
-	+	+	+	+	+	-	-

Reference(s)
V.250

Parameter Description

<value>(num)

[0]	User Profile Number

2.4 ATQ Result Code Presentation Mode

ATQ controls if the BGS2-E transmits any result code to the TE. Other information text transmitted as response is not affected.

Syntax

Exec Command

ATQ[<n>]

Response(s)

If <n>=0:
OK
If <n>=1:
(none)

PIN	ASC0	ASC1	MUX1	MUX2	MUX3		Last
-	+	+	+	+	+	-	-

Reference(s)

V.250

Parameter Description

<n>(num)(&W)(&V)

Result Code Presentation Mode.
It is not recommended to change this value.

[0](&F)	ME transmits result code.
1	Result codes are suppressed and not transmitted.

2.5 ATV Result code format mode

This command determines the contents of header and trailer transmitted with AT command result codes and information responses. Possible responses are described in Section 2.5.1, Verbose and numeric result codes.

Syntax

Exec Command
ATV[<value>]
Response(s)
OK ERROR

PIN	ASC0	ASC1	MUX1	MUX2	MUX3		Last
-	+	+	+	+	+	-	-

Reference(s)
V.250

Parameter Description

<value>(num)(&W)(&V)	
[0]	Information response: <text><CR><LF> Short result code format: <numeric code><CR>
1(&F)	Information response: <CR><LF><text><CR><LF> Long result code format: <CR><LF><verbose code><CR>

2.5.1 Verbose and numeric result codes

Verbose format	Numeric format	Meaning
OK	0	command executed, no errors
CONNECT	1	link established
RING	2	ring detected
NO CARRIER	3	link not established or disconnected
ERROR	4	invalid command or command line too long
NO DIALTONE	6	no dial tone, dialling impossible, wrong mode
BUSY	7	remote station busy
NO ANSWER	8	no answer
CONNECT 2400/RLP	47	link with 2400 bps and Radio Link Protocol
CONNECT 4800/RLP	48	link with 4800 bps and Radio Link Protocol
CONNECT 9600/RLP	49	link with 9600 bps and Radio Link Protocol
CONNECT 14400/RLP	50	link with 14400 bps and Radio Link Protocol
ALERTING		alerting at called phone
DIALING		mobile phone is dialing

2.6 ATX CONNECT Result Code Format

ATX determines whether or not the BGS2-E transmits particular result codes to the TE. It also controls whether or not the ME verifies the presence of a dial tone when it begins dialing, and if engaged tone (busy signal) detection is enabled.

Syntax

Exec Command

ATX[<value>]

Response(s)

OK
ERROR

PIN	ASC0	ASC1	MUX1	MUX2	MUX3		Last
-	+	+	+	+	+	-	-

Reference(s)

V.250

Parameter Description

<value>(num)(&W)(&V)

[0]	CONNECT result code only returned. Dial tone and busy detection are disabled.
1	CONNECT <text> result code only returned. Dial tone and busy detection are both disabled.
2	CONNECT <text> result code returned. Dial tone detection is enabled, busy detection is disabled.
3	CONNECT <text> result code returned. Dial tone detection is disabled, busy detection is enabled.
4(&F)	CONNECT <text> result code returned. Dial tone and busy detection are both enabled.

2.7 ATZ Restore AT Command Settings from User Defined Profile

First ATZ resets the AT command settings to their factory default values, similar to AT&F. Afterwards the AT command settings are restored from a user defined profile in non-volatile memory of BGS2-E, if one was stored with AT&W before. Any additional AT command on the same command line may be ignored. A delay of 300 ms is required before next AT command is sent.
If a connection is in progress, it will be terminated.

Syntax

Exec Command
ATZ[<value>]
Response(s)
OK

PIN	ASC0	ASC1	MUX1	MUX2	MUX3		Last
-	+	+	+	+	+	-	-

Reference(s)
V.250

Parameter Description

<value>(num)	
[0]	User Profile Number

2.8 AT+CFUN Functionality Level

AT+CFUN controls the BGS2-E's functionality level. It can be used to reset the ME, to choose one of the power save (SLEEP) modes or to return to full functionality.
Intended for power saving, SLEEP mode usage reduces the functionality of the ME to a minimum and thus minimizes the current consumption. Further information, particularly power supply ratings during the various operating modes and the timing of hardware signals in SLEEP mode can be found in the "BGS2-E Hardware Interface Description, Version 00.100".
Power save (SLEEP) modes fall in two categories:

- NON-CYCLIC SLEEP mode selectable with <fun>=0
- and CYCLIC SLEEP modes selectable with <fun>= 7 or 9.

NON-CYCLIC SLEEP mode permanently blocks the serial interface. The benefit of CYCLIC SLEEP mode is that the serial interface remains accessible and that, in intermittent wake-up periods, characters can be sent or received without terminating the selected mode. This allows the ME to wake up for the duration of an event and, afterwards, to resume power saving. By setting/resetting the CTS signal the ME indicates to the application whether or not the UART is active. A summary of all SLEEP modes and the different ways of waking up the module can be found in Section 2.8.1, Wake up the ME from SLEEP mode.

For NON-CYCLIC and CYCLIC SLEEP mode both the ME and the application must be configured to use hardware flow control. The default setting of hardware flow control is AT\Q0 which must be altered to AT\Q3. For use after restart you are advised to add it to the user profile saved with AT&W.
If both interfaces ASC0 and ASC1 are connected, hardware flow control must be set in either application. See notes below for further detail.

AT+CFUN test command returns the values of the supported parameters.
AT+CFUN read command returns the current functionality value.
AT+CFUN write command can be used to reset the ME, to choose one of the SLEEP modes or to return to full functionality.

Syntax

Test Command

```
AT+CFUN=?
```

Response(s)

```
+CFUN: (list of supported <fun>s) , (list of supported <rst>s)
OK
```

Read Command

```
AT+CFUN?
```

Response(s)

```
+CFUN: <fun>
OK
```

Write Command

```
AT+CFUN=[<fun>[, <rst>]]
```

Response(s)

```
OK
ERROR
+CME ERROR: <err>
```

PIN	ASC0	ASC1	MUX1	MUX2	MUX3	Last
-	+	+	±	±	±	+	-

Reference(s)

GSM 07.07

Unsolicited Result Code

^SYSSTART

Indicates that the ME has been started and is ready to operate. If autobauding is active (AT+IPR=0) the URC is not generated.

Parameter Description

<fun>(num)	
0	NON-CYCLIC SLEEP mode: In this mode, the AT interface is not accessible. Consequently, after setting <fun>=0, do not send further characters. Otherwise these characters remain in the input buffer and may delay the output of an unsolicited result code. The first wake-up event stops power saving and takes the ME back to full functionality level <fun>=1.
[1](&F)(P)	Full functionality (no power saving). If the ME is in one of the CYCLIC SLEEP modes you can issue AT+CFUN=1 to stop power saving and return to full functionality. Keep in mind that, unlike the reset command described below, this action does not restart the ME but only changes the level of functionality. See parameter <rst> for details on the reset.
7	CYCLIC SLEEP mode: In this mode, the serial interface is shortly enabled while CTS is active. If characters are recognized on the serial interface, the ME stays active for 2 seconds after the last character was sent or received. The ME exits SLEEP mode only, if AT+CFUN=1 is entered.
9	CYCLIC SLEEP mode: In this mode, the serial interface is shortly enabled while CTS is active. If characters are recognized on the serial interface, the ME stays active after the last character was sent or received for at least the time, which can be configured by AT^SCFG="PowerSaver/Mode9/Timeout",<psm9to> (temporary wakeup). In contrast to SLEEP mode 7 assertion of RTS can also be used to temporarily wake up the ME. In this case too, activity time is at least the time set with AT^SCFG="PowerSaver/Mode9/Timeout",<psm9to>. RTS can be activated either from ASC0 or ASC1. The ME exits SLEEP mode only, if AT+CFUN=1 is entered.

<rst>(num)	
The parameter can only be used if the serial interface is enabled. Due to the command syntax, you need to enter parameter <fun>, followed by <rst>, where <fun> is only a placeholder and has no effect. See examples below.	
[0]	Placeholder for <fun> as stated above.
1	ME resets and restarts to full functionality. After reset and restart, PIN1 authentication is necessary (AT+CPIN).

Notes

- The settings made with AT+CFUN apply to both serial interfaces ASC0 and ASC1.
- CYCLIC SLEEP mode cannot be activated or resumed as long as data is buffered in one of the output buffers of the ME (ASC0 or ASC1). Therefore, ensure that the following requirements be met:
  a) If hardware flow control is set in the ME (AT\Q3), the host must also use hardware flow control.
  b) Remember that AT\Q3 takes effect only on the interface where the command was set. Therefore, if both interfaces ASC0 and ASC1 are connected ensure to set AT\Q3 on each interface. However, if only one interface shall be operated ensure that, on the unused interface, AT\Q3 is neither enabled nor stored to the AT&W user profile. This is necessary to avoid that URCs, outstanding AT command responses or, after restart even the "^SYSSTART" URC might be buffered on the unused interface without being collected by the host application.

- In Multiplex mode, the CFUN profile is shared by all multiplexer channels.
- If the ME is in Multiplexer mode, it is not recommended to activate SLEEP mode with AT+CFUN=<fun>. The best approach to properly control SLEEP mode in this case is to issue the PSC messages described in [4], Section "Power saving control".
- While a circuit-switched call is in progress, <fun>=7 or 9 can be activated without terminating the call. However, setting <fun>=0 during a circuit-switched call immediately disconnects this call.
- Power saving works properly only when PIN authentication has been done. If you attempt to activate power saving while the SIM card is not inserted or the PIN is not correctly entered, the selected <fun> level will be set, though power saving does not take effect. Furthermore, in order to accept incoming calls, SMS or network related URCs in SLEEP mode the ME must be registered when it enters the SLEEP mode.
- To check whether power saving is on, you can query the status with the read command AT+CFUN? only if the module is in full functionality mode or in CYCLIC SLEEP mode.
- Recommendation: In NON-CYCLIC SLEEP mode, you can set an RTC alarm to wake up the ME and return to full functionality. This is a useful approach because, in this mode, the AT interface is not accessible.

Examples

EXAMPLE 1

To check the level of functionality use the read command:

```
AT+CFUN?
+CFUN: 1                    Default mode after ME was restarted
```

Remember that the AT interface is not accessible in NON-CYCLIC SLEEP mode. The read command is only useful when the ME is set to full functionality or CYCLIC SLEEP mode.

```
AT+CFUN?
+CFUN: 9                    CYCLIC SLEEP mode
```

EXAMPLE 2

To set the ME to NON-CYCLIC SLEEP mode enter

```
AT+CFUN=0
OK
```

When, for example, an SMS is being received and indicated by an unsolicited result code (URC), the ME wakes up to full operation.

```
+CMTI: "SM",5               Note that the URC used in this example will appear only, if
                            AT+CNMI=1,1 was configured before.
```

After this, you may want to verify the operating status:

```
AT+CFUN?
+CFUN: 1                    Indicates that ME has entered full functionality mode.
```

EXAMPLE 3

To stop CYCLIC SLEEP mode and return to full functionality:

```
AT+CFUN?
+CFUN: 9
OK
AT+CFUN=1
OK
```

Remember that this approach is not applicable to the NON-CYCLIC SLEEP mode (since the serial interface is disabled). The NON-CYCLIC SLEEP mode ends with the first wake-up event.

EXAMPLE 4

To reset and restart the ME:

```
AT+CFUN=1,1                 or alternatively, AT+CFUN=0,1 or 7,1 or 9,1
```

OK	
^SYSSTART	The ^SYSSTART URC confirms that the ME has been rebooted. Note that ^SYSSTART appears only if AT+IPR ≠ 0. Remember to enter the SIM PIN after restart.

2.8.1 Wake up the ME from SLEEP mode

A wake-up event is any event that causes the ME to draw more current. Depending on the selected mode, the wake-up event either switches the SLEEP mode off and takes the ME back to full functionality AT+CFUN=1, or activates the ME temporarily without terminating the selected SLEEP mode.

Definitions of the state transitions described in Table 2.3:

- Quit: ME exits SLEEP mode.
- Temporary: ME becomes active temporarily for the duration of the event and the mode-specific follow-up time after the last character was sent or received on the serial interface.
- No effect: Event is not relevant in the selected SLEEP mode. The ME does not wake up.

Table 2.3: Wake-up events in NON-CYCLIC and CYCLIC SLEEP modes

Event	Selected mode: <fun>=0	Selected mode: <fun>=7 or 9
Ignition line	No effect	No effect
RTS0 or RTS1 activation	Quit	Mode 7: No effect (RTS is only used for flow control) Mode 9: Temporary
Unsolicited Result Code (URC)	Quit	Temporary
Incoming voice or data call	Quit	Temporary
Any AT command (incl. outgoing SMS, voice or data call)	Not possible (UART disabled)	Temporary
Incoming SMS (AT+CNMI is set to 0,0 (this is the default setting)	No effect	No effect
Incoming SMS (AT+CNMI is set to 1,1)	Quit	Temporary
GPRS data transfer	Not possible (UART disabled)	Temporary
RTC alarm (AT+CALA)	Quit	Temporary
AT+CFUN=1	Not possible (UART disabled)	Quit

2.9 AT^SMSO Switch Off BGS2-E

AT^SMSO initiates BGS2-E's power-off procedure. Do not send any other AT command after this.

Low level of the ME's V180/V285 pins notifies that the procedure has completed and the ME has entered the POWER DOWN mode. Therefore, be sure not to disconnect the operating voltage until the V180/V285 pins are low or until the URC "^SHUTDOWN" is displayed. Otherwise, you run the risk of losing data. For further details on how to turn off the ME refer to [2]. Particular attention should be paid to the sections dealing with an external power indication circuit and back powering.

Syntax

Test Command

```
AT^SMSO=?
```

Response(s)

```
OK
```

Exec Command

```
AT^SMSO
```

Response(s)

```
^SMSO: MS OFF
OK
ERROR
```

PIN	ASC0	ASC1	MUX1	MUX2	MUX3		Last
-	+	+	+	+	+	+	+

Unsolicited Result Code

^SHUTDOWN

Indicates that the power-off procedure is finished and the module will be switched off in less than 1 second.

Notes

- If AT^SMSO is entered on one of the Multiplexer channels the ME closes the Multiplexer channels, terminates the Multiplexer and deactivates all other functions. Then, the URC "^SHUTDOWN" will be issued on the physical serial interface (ASC0). The URC will be transmitted at the bit rate last activated on ASC0 for use with the Multiplex driver.
- If both interfaces ASC0 and ASC1 are connected the URC appears on both of them.

2.10 AT+GCAP Capabilities List

AT+GCAP displays a list of basic capabilities supported by the BGS2-E. This allows the TE to determine which groups of extended-syntax AT commands can be used with the ME.

Syntax

Test Command
AT+GCAP=?
Response(s)
OK

Exec Command
AT+GCAP
Response(s)
+GCAP: <name> OK

PIN	ASC0	ASC1	MUX1	MUX2	MUX3		Last
-	+	+	+	+	+	-	-

Reference(s)
V.250

Parameter Description

<name>(str)

e.g. +CGSM, +FCLASS

2.11 AT+CMEE Error Message Format

AT+CMEE controls the format of error result codes that indicates errors related to BGS2-E functionality. Format can be selected between plain "ERROR" output, error numbers or verbose "+CME ERROR: <err>" and "+CMS ERROR: <err>" messages.
Possible error result codes are listed in Table 2.4, General "CME ERROR" Codes (GSM 07.07), Table 2.5, General "CME ERROR" Codes (proprietary), Table 2.6, GPRS related "CME ERROR" Codes (GSM 07.07) and Table 2.7, SMS related "CMS ERROR" Codes (GSM 07.05).
In multiplex mode (refer AT+CMUX) the setting applies only to the logical channel where selected. The setting on the other channels may differ.

Syntax

Test Command
AT+CMEE=?
Response(s)
+CMEE: (list of supported<errMode>s) OK

Read Command
AT+CMEE?
Response(s)
+CMEE: <errMode> OK

Write Command
AT+CMEE=<errMode>
Response(s)
OK ERROR +CME ERROR: <err>

PIN	ASC0	ASC1	MUX1	MUX2	MUX3	Last
-	+	+	+	+	+	-	-

Reference(s)
GSM 07.07

Parameter Description

<errMode>(num)(&W)(&V)	
0(&F)(D)	Disable result code, i.e. only "ERROR" will be displayed.
1	Enable error result code with numeric values.
2	Enable error result code with verbose (string) values.

Example

To obtain enhanced error messages it is recommended to choose <errMode>=2.

```
AT+CMEE=2
OK
```

2.11.1 CME/CMS Error Code Overview

Table 2.4: General "CME ERROR" Codes (GSM 07.07)

<err> Code	Text (if AT+CMEE=2)
0	phone failure
1	no connection to phone
2	phone adapter link reserved
3	operation not allowed
4	operation not supported
5	PH-SIM PIN required
6	PH-FSIM PIN required
7	PH-FSIM PUK required
10	SIM not inserted
11	SIM PIN required
12	SIM PUK required
13	SIM failure
14	SIM busy
15	SIM wrong
16	incorrect password
17	SIM PIN2 required
18	SIM PUK2 required
20	memory full
21	invalid index
22	not found
23	memory failure
24	text string too long
25	invalid characters in text string
26	dial string too long
27	invalid characters in dial string
30	no network service
31	network timeout
32	network not allowed - emergency calls only
40	network personalization PIN required
41	network personalization PUK required
42	network subset personalization PIN required
43	network subset personalization PUK required
44	service provider personalization PIN required
45	service provider personalization PUK required
46	corporate personalization PIN required
47	corporate personalization PUK required
48	PH-SIM PUK (master phone code) required
100	unknown
132	service option not supported

<err> Code	Text (if AT+CMEE=2)
133	requested service option not subscribed
134	service option temporary out of order
256	operation temporary not allowed
257	call barred
258	phone busy
259	user abort
260	invalid dial string
261	SS not executed
262	SIM blocked
263	invalid block

Table 2.5: General "CME ERROR" Codes (proprietary)

<err> Code	Text (if AT+CMEE=2)
615	network failure
616	network is down
639	service type not yet available
640	operation of service temporary not allowed
764	missing input value
765	invalid input value
767	operation failed

Table 2.6: GPRS related "CME ERROR" Codes (GSM 07.07)

<err> Code	Text (if AT+CMEE=2)
103	illegal MS
106	illegal ME
107	GPRS services not allowed
111	PLMN not allowed
112	location area not allowed
113	roaming not allowed in this location area
148	unspecified GPRS error
149	PDP authentication failure
150	invalid mobile class

Table 2.7: SMS related "CMS ERROR" Codes (GSM 07.05)

<err> Code	Text (if AT+CMEE=2)
1	unassigned (unallocated) number
8	operator determined barring
10	call barred
21	short message transfer rejected
27	destination out of service
28	unidentified subscriber
29	facility rejected
30	unknown subscriber

<err> Code	Text (if AT+CMEE=2)
38	network out of order
41	temporary failure
42	congestion
47	resources unavailable, unspecified
50	requested facility not subscribed
69	requested facility not implemented
81	invalid short message transfer reference value
95	invalid message, unspecified
96	invalid mandatory information
97	message type non-existent or not implemented
98	message not compatible with short message protocol state
99	information element non-existent or not implemented
111	protocol error, unspecified
127	interworking, unspecified
128	telematic interworking not supported
129	short message type 0 not supported
130	cannot replace short message
143	unspecified TP-PID error
144	data coding scheme (alphabet) not supported
145	message class not supported
159	unspecified TP-DCS error
160	command cannot be actioned
161	command unsupported
175	unspecified TP-command error
176	TPDU not supported
192	SC busy
193	no SC subscription
194	SC system failure
195	invalid SME address
196	destination SME barred
197	SM rejected-duplicate SM
198	TP-VPF not supported
199	TP-VP not supported
208	do SIM SMS storage full
209	no SMS storage capability in SIM
210	error in MS
211	memory capacity exceeded
212	SIM application toolkit busy
213	SIM data download error
255	unspecified error cause
300	ME failure
301	SMS service of ME reserved

<err> Code	Text (if AT+CMEE=2)
302	operation not allowed
303	operation not supported
304	invalid PDU mode parameter
305	invalid text mode parameter
310	SIM not inserted
311	SIM PIN required
312	PH-SIM PIN required
313	SIM failure
314	SIM busy
315	SIM wrong
316	SIM PUK required
317	SIM PIN2 required
318	SIM PUK2 required
320	memory failure
321	invalid memory index
322	memory full
330	SMSC address unknown
331	no network service
332	network timeout
340	no +CNMA acknowledgement expected
500	unknown error
512	user abort
513	unable to store
514	invalid status
515	invalid character in address string
516	invalid length
517	invalid character in PDU
518	invalid parameter
519	invalid length or character
520	invalid character in text
521	timer expired
522	operation temporary not allowed

2.12 AT+CSCS Character Set

AT+CSCS write command informs the BGS2-E which character set is used by the TE. This enables the ME to convert character strings correctly between TE and ME character sets. Please also refer to Section 1.6, Supported character sets.

Syntax

Test Command

```
AT+CSCS=?
```

Response(s)

```
+CSCS: (list of supported<chset>s)
OK
```

Read Command

```
AT+CSCS?
```

Response(s)

```
+CSCS: <chset>
OK
```

Write Command

```
AT+CSCS=[<chset>]
```

Response(s)

```
OK
ERROR
+CME ERROR: <err>
```

PIN	ASC0	ASC1	MUX1	MUX2	MUX3		Last
-	+	+	+	+	+	-	-

Reference(s)

GSM 07.07, GSM 11.11

Parameter Description

<chset>(str)	
"GSM"(&F)(P)	GSM default alphabet (GSM 03.38 subclause 6.2.1). Note: This setting may cause software flow control problems since the codes used to stop and resume data flow (XOFF = decimal 19, XON = decimal 17) are interpreted as normal characters.
"UCS2"	16-bit universal multiple-octet coded character set (ISO/IEC10646 [32]). UCS2 character strings are converted to hexadecimal numbers in the range 0000 to FFFF; e.g. "004100620063" equates to three 16-bit characters with decimal values 65, 98 and 99.

2.13 AT^SCFG Extended Configuration Settings

AT^SCFG can be used to query and configure various settings of the BGS2-E.
AT^SCFG read command returns a list of all supported parameters and their current values.
AT^SCFG write command queries a configuration parameter (if no value is entered) or sets its value(s).
Input of parameter names is always coded in GSM character set, parameter values are expected to be given as specified via AT+CSCS.

Syntax

Test Command

AT^SCFG=?

Response(s)

^SCFG: "Audio/AMR", (list of supported <amr>s)
^SCFG: "Audio/Loop", (list of supported <al>s)
^SCFG: "Call/ECC", (list of supported <ecc>s)
^SCFG: "Call/SpeechVersion1", (list of supported <csv1>s)
^SCFG: "GPRS/ATS0/withAttach", (list of supported <gs0aa>s)
^SCFG: "GPRS/AutoAttach", (list of supported <gaa>s)
^SCFG: "GPRS/RingOnIncomingData", (list of supported <groid>s)
^SCFG: "MEopMode/CregRoam", (list of supported <mrs>s)
^SCFG: "PowerSaver/Mode9/Timeout", (list of supported <psm9to>s)
^SCFG: "Radio/Band/HandOver", (list of supported <HandOverStatus>s)
^SCFG: "Tcp/IRT", (list of supported <tcpIrt>)
^SCFG: "Tcp/MR", (list of supported <tcpMr>)
^SCFG: "Tcp/OT", (list of supported <tcpOt>)
^SCFG: "Tcp/WithURCs", (list of supported <tcpWithUrc>)
^SCFG: "URC/CallStatus/CIEV", (list of supported <succ>s)
^SCFG: "URC/CallStatus/SLCC", (list of supported <sucs>s)
^SCFG: "URC/Datamode/Ringline", (list of supported <udri>s)
^SCFG: "URC/Ringline", (list of supported <uri>s)
^SCFG: "URC/Ringline/ActiveTime", (list of supported <urat>s)
OK

Read Command

AT^SCFG?

Response(s)

^SCFG: "Audio/AMR", $<amr>_1$[, $<amr>_2$[, $<amr>_3$...[$<amr>_{10}$]]]
^SCFG: "Audio/Loop", <al>
^SCFG: "Call/ECC", <ecc>
^SCFG: "Call/SpeechVersion1", <csv1>
^SCFG: "GPRS/ATS0/withAttach", <gs0aa>
^SCFG: "GPRS/AutoAttach", <gaa>
^SCFG: "GPRS/RingOnIncomingData", <groid>
^SCFG: "MEopMode/CregRoam", <mrs>
^SCFG: "PowerSaver/Mode9/Timeout", <psm9to>
^SCFG: "Radio/Band/HandOver", <HandOverStatus>
^SCFG: "Tcp/IRT", <tcpIrt>
^SCFG: "Tcp/MR", <tcpMr>
^SCFG: "Tcp/OT", <tcpOt>
^SCFG: "Tcp/WithURCs", <tcpWithUrc>
^SCFG: "URC/CallStatus/CIEV", <succ>
^SCFG: "URC/CallStatus/SLCC", <sucs>
^SCFG: "URC/Datamode/Ringline", <udri>
^SCFG: "URC/Ringline", <uri>

Read Command (Continued)

AT^SCFG?

Response(s)

^SCFG: "URC/Ringline/ActiveTime", <urat>
OK

Write Command

Adaptive Multi Rate (AMR):

AT^SCFG="Audio/AMR"[, <amr>]

Response(s)

^SCFG: "Audio/AMR", $<amr>_1$[, $<amr>_2$[, $<amr>_3$...[$<amr>_{10}$]]]
OK
ERROR
+CME ERROR: <err>

Write Command

Configure Audio Loop:

AT^SCFG="Audio/Loop"[, <al>]

Response(s)

^SCFG: "Audio/Loop", <al>
OK
ERROR
+CME ERROR: <err>

Write Command

Query/Configure Emergency numbers for SIM without ECC field

AT^SCFG="Call/ECC"[, <ecc>]

Response(s)

^SCFG: "Call/ECC", <ecc>
OK
ERROR
+CME ERROR: <err>

Write Command

Call/Configure SpeechVersion1

AT^SCFG="Call/SpeechVersion1"[, <csv1>]

Response(s)

^SCFG: "Call/SpeechVersion1", <csv1>
OK
ERROR
+CME ERROR: <err>

Write Command

GPRS ATS0 with automatic attach

AT^SCFG="GPRS/ATS0/withAttach"[, <gs0aa>]

Response(s)

^SCFG: "GPRS/ATS0/withAttach", <gs0aa>
OK
ERROR
+CME ERROR: <err>

Write Command

Automatic GPRS attach

AT^SCFG="GPRS/AutoAttach"[, <gaa>]

Response(s)

^SCFG: "GPRS/AutoAttach", <gaa>
OK
ERROR
+CME ERROR: <err>

Write Command

Ring on incoming GPRS IP data packets

AT^SCFG="GPRS/RingOnIncomingData"[, <groid>]

Response(s)

^SCFG: "GPRS/RingOnIncomingData", <groid>
OK
ERROR
+CME ERROR: <err>

Write Command

AT^SCFG="MEopMode/CregRoam"[, <mrs>]

Response(s)

^SCFG: "MEopMode/CregRoam", <mrs>
OK
ERROR
+CME ERROR: <err>

Write Command

Query/Set timeout value for power saving mode 9

AT^SCFG="PowerSaver/Mode9/Timeout"[, <psm9to>]

Response(s)

^SCFG: "PowerSaver/Mode9/Timeout", <psm9to>
OK
ERROR
+CME ERROR: <err>

Write Command

Control Special Call Handover Setting

AT^SCFG="Radio/Band/HandOver"[, <HandOverStatus>]

Response(s)

^SCFG: "Radio/Band/HandOver", <HandOverStatus>
OK
ERROR
+CME ERROR: <err>

Write Command

Configuration of TCP parameter 'InitialRetransmissionTimeout':

AT^SCFG="Tcp/IRT"[, <tcpIrt>]

Response(s)

^SCFG: "Tcp/IRT", <tcpIrt>
OK
ERROR
+CME ERROR: <err>

Write Command

Configuration of TCP parameter 'MaxRetransmissions':

AT^SCFG="Tcp/MR"[, <tcpMr>]

Response(s)

^SCFG: "Tcp/MR", <tcpMr>
OK
ERROR
+CME ERROR: <err>

Write Command

Configuration of TCP parameter 'OverallTimeout':

AT^SCFG="Tcp/OT"[, <tcpOt>]

Response(s)

^SCFG: "Tcp/OT", <tcpOt>
OK
ERROR
+CME ERROR: <err>

Write Command

Configuration of Internet Service URCs:

AT^SCFG="Tcp/WithURCs"[, <tcpWithUrc>]

Response(s)

^SCFG: "Tcp/WithURCs", <tcpWithUrc>
OK
ERROR
+CME ERROR: <err>

Write Command

Configuration of URC "+CIEV: call" Call Status Indication

AT^SCFG="URC/CallStatus/CIEV"[, <succ>]

Response(s)

^SCFG: "URC/CallStatus/CIEV", <succ>
OK
ERROR
+CME ERROR: <err>

Write Command

Configuration of URC "^SLCC" Call Status Indication

AT^SCFG="URC/CallStatus/SLCC"[, <sucs>]

Response(s)

^SCFG: "URC/CallStatus/SLCC", <sucs>
OK
ERROR
+CME ERROR: <err>

Write Command

URC indication in datamode via Ring line:

AT^SCFG="URC/Datamode/Ringline"[, <udri>]

Response(s)

^SCFG: "URC/Datamode/Ringline", <udri>
OK
ERROR
+CME ERROR: <err>

Write Command

URC indication via Ring line:

AT^SCFG="URC/Ringline"[, <uri>]

Response(s)

^SCFG: "URC/Ringline", <uri>
OK
ERROR
+CME ERROR: <err>

Write Command

Duration of active RING line for URC indications:

AT^SCFG="URC/Ringline/ActiveTime"[, <urat>]

Response(s)

^SCFG: "URC/Ringline/ActiveTime", <urat>
OK
ERROR
+CME ERROR: <err>

PIN	ASC0	ASC1	MUX1	MUX2	MUX3		Last
-	+	+	+	+	+	-	-

Parameter Description

<amr>(str)(+CSCS)

Adaptive Multi Rate

This parameter can be used to control the usage of the feature "Adaptive Multi Rate" (AMR). It is possible to enable or disable this feature for all network operators, or to enable it for selected operators (max. 10). If the feature is enabled for all operators, any request to enable it for a specific operator will result in a "+CME ERROR: operation temporary not allowed".
Changes of this parameter become active with the next call.
Parameter is global for all interfaces, volatile and will not be reset by AT&F.

“enabled“(P)	AMR is used for every operator.
“disabled“	AMR is not used for any operator.
00000...999999	Enable AMR for the specified operator (in BCD or IRA format; see AT+COPS).

<al>(str)

Audio Loop Setting

This parameter can be used to configure an audio loop for performing a simple verification of audio connections. The feature is intended for testing only.
Full audio processing will be performed. Audio parameterization capabilities remain nearly unrestricted. Microphone and loudspeaker ports can be selected with random access. Neither a SIM nor a GSM network is necessary to turn the audio loop on.
Turning the audio loop on activates audio mode 0 which cannot be selected during normal operation of the ME. Turning the audio loop off activates audio mode 1. The active audio mode can be verified via AT^SNFS.
Audio mode 0 contains linear filters and neither echo canceller nor noise suppression are activated. It is also possible to select any other audio mode. These audio modes use the parameterization set as default during normal operation of the ME.
Activation of the audio loop turns sidetone off, even if sidetone is on in the selected audio mode during normal operation.
Audio mode can be selected via AT command AT^SNFS.
Parameter is global for all interfaces, volatile and will not be reset by AT&F.

“0“(P)	No audio loop active
“1“	Audio loop active

<ecc>(str)(+CSCS)

Emergency call numbers on non-ECC SIM

This parameter specifies emergency call numbers on SIM without ECC field. The parameter has no influence on the commonly used emergency numbers 112 and 911 which are always supported.
Please refer also to Section 7.3, ATD where you can find a list of emergency call numbers supported if no SIM is inserted.
The value range of <ecc> is "0"..."255". To select or deselect an emergency number calculate the sum of the values of all desired numbers and use the resulting value. For example, for "08" (2) and "118" (8) please enter the value (10).
Parameter is global for the ME, non-volatile and will not be reset by AT&F.

" 0"(D)	No additional emergency numbers
" 1"	000
" 2"	08
" 4"	110
" 8"	118
"16"	119
"32"	999
"64"	Reserved
"128"	Reserved
"255"	All additional emergency call numbers are supported.

<csv1>(str)(+CSCS)

Call Speech Version1

This parameter can be used to query or configure the speech version 1 indication in the bearer capabilities in case of voice calls (see GSM 04.08).
If you try to change this parameter as long as a circuit switched call is active, the command returns the new value and "OK", but the changes will not take effect before next call setup.
Parameter is global for the ME, volatile and will not be reset by AT&F.

"0"(P)	Full rate (FR) and half rate (HR) codecs are enabled for speech calls - full rate (FR) codec is preferred.
"1"	Full rate (FR) and half rate (HR) codecs are enabled for speech calls - half rate (HR) codec is preferred.
"2"	Half rate (HR) codec is disabled and full rate (FR) codec is enabled for speech calls.

<gs0aa>(str)(+CSCS)

GPRS ATS0 with Attach

This parameter can be used to control the behaviour of ATS0.
Parameter is global for all interfaces, volatile and will not be reset by AT&F.

"on"(P)	When the ATS0=<n> (<n>>0) command is received, the MT will attempt to perform a GPRS attach.
"off"	When the ATS0=<n> (<n>>0) command is received, the MT will not attempt to perform a GPRS attach.

<gaa>(str)(+CSCS)

GPRS with AutoAttach

This parameter can be used to control whether the ME will perform a GPRS attach immediately after power-up and registering to the network or not. If the setting is changed to "enabled" and the ME is not attached yet, it will not initiate an attach immediately but after the next power-up and registration to the network.
Parameter is global for all interfaces, non-volatile and will not be reset by AT&F.

“disabled“(D)	GPRS auto attach is disabled
“enabled“	GPRS auto attach is enabled

<groid>(str)(+CSCS)

Ring on incoming GPRS IP data packets

This parameter can be used to control the behaviour of the RING line for incoming IP packets in GPRS online mode.
Parameter is local for the interface, volatile and will not be reset by AT&F.

“on“	If the ME is in power saving mode 7 or 8 or 9 (see AT+CFUN) and hardware flow control is in use (AT\Q3) and the RTS line is inactive and there are incoming IP packets for a GPRS context which is online, then the RING line will be activated once, for a time which is configured by the parameter "URC/Ringline/ActiveTime" (<urat>). The RING line to be used can be configured with the parameter "URC/Ringline" (<uri>).
“off“(P)	RING line is not activated for incoming IP packets.

<psm9to>(str)(+CSCS)

Power saving mode 9 timeout

This parameter can be used to query or configure the wake up time for power saving mode 9 (see AT+CFUN with parameter <fun>=9).
Parameter is global for the ME, volatile and will not be reset by AT&F.

5...20(P)...36000	The granularity of the timeout value is 100ms (i.e. a value of 10 equal 1 second). The minimum timeout value that can be applied is 5, but accuracy is only guaranteed for timeout values greater than 20.

<HandOverStatus>(str)(+CSCS)

Call Handover Status

This parameter offers a workaround to prevent problems during call handover into the 1900 MHz band, caused by non-conforming configurations of the 1900 MHz GSM network.

“0“(P)	Disable workaround.
“1“	Enable workaround. This value should be selected when handover into a 1900 MHz GSM network fails. If required for permanent use the value needs to be set each time the ME is restarted.

<tcpIrt>(str)(+CSCS)

Initial Retransmission Timeout (IRT)

1...3(D)...60	This parameter determines the time (in seconds) the TCP/IP stack will wait before starting the first retransmission of packets during the initial connection establishment phase. The TCP protocol ensures the retransmission of packets several times at increasing intervals until some upper limit is reached. This mechanism prevents packet loss and serious congestion problems. In addition, the parameters <tcpMr> and <tcpOt> can be set to further optimize

this mechanism for special conditions depending on the mobile network.
Parameter is global for the ME and non-volatile. Use of default value is recommended. If changed the new value takes effect the next time you start an Internet service with AT^SISO.

<tcpMr>(str)(+CSCS)

Maximum Number of Retransmissions (MR)

1...10(D)...30

This parameter determines the maximum number of times to retransmit TCP packets.
The value set with <tcpMr> will be assumed as default for the <srvParmTag> "tcpMR" when a new service profile is created with AT^SISS. In each service profile, you can set another "tcpMR" value which has precedence over the global value set with AT^SCFG. Existing service profiles are not affected when you change the global value via AT^SCFG.
Parameter is global for the ME and non-volatile. Use of default value is recommended.

<tcpOt>(str)(+CSCS)

Overall TCP Timer for outstanding connections (tcpOT)

1...6000(D)

This parameter specifies the number of seconds to wait before closing a connection if TCP/IP packets are not acknowledged.
Setting the maximum value is practically equivalent to deactivating the tcpOT mechanism because the maximum time would never be reached by the TCP/IP stack.
The value set with <tcpOt> will be assumed as default for the <srvParmTag> "tcpOT" when a new service profile is created with AT^SISS. However, in each service profile, you can set another "tcpOT" value which has precedence over the global value set with AT^SCFG. Existing service profiles are not affected when you change the global value via AT^SCFG.
Parameter is non-volatile. Use of default value is recommended.

<tcpWithUrc>(str)(+CSCS)

URC mode or polling mode for Internet service commands

This parameter enables or disables the presentation of the following URCs related to Internet service commands: "^SISR" URC, "^SISW" URC and "^SIS" URC for parameter <urcCause>=0 (Internet service events). "^SIS" URCs with <urcCause>=1 or 2 used to indicate incoming Socket connections are always enabled.
Parameter is global for the ME and non-volatile.

“on“(D)

Enable URCs related to Internet service commands.
Throughout the Chapter "Internet Service AT Commands" the mode is also referred to as URC mode.

“off“

Disable URCs related to Internet service commands.
This requires the TE to employ polling techniques when using the Internet service AT commands: The TE is responsible to retrieve all status information needed to control an Internet session. The method is referred to as polling mode.

<succ>(str)(+CSCS)

CIEV Call Status Indication

This parameter can be used to control the behaviour of URC "+CIEV: call". See also AT+CIND, AT+CMER and Section 7.1, Call Status Information.
Parameter is global for all interfaces and will not be reset by AT&F.

“restricted“(P)	URC "+CIEV: call" will be issued only when a Call Status transition ends in state "active" or "unknown" (see Section 7.1, Call Status Information) for a call in the list of active calls.
“verbose“	URC "+CIEV: call" will be issued when any state transition (including transitions beginning or ending in state "unknown") occurs in the list of active calls, or when a traffic channel is established.

<sucs>(str)(+CSCS)

SLCC Call Status Indication

This parameter can be used to control the behaviour of URC "^SLCC". See also AT^SLCC and Section 7.1, Call Status Information.
Parameter is global for all interfaces and will not be reset by AT&F.

“restricted“	URC "^SLCC" will be issued only when a Call Status transition ends in state "active" or "unknown" (see Section 7.1, Call Status Information) for a call in the list of active calls
“verbose“(P)	URC "^SLCC" will be issued when any state transition (including transitions beginning or ending in state "unknown") occurs in the list of active calls, or when a traffic channel is established.

<uri>(str)(+CSCS)

URC RING line

This parameter can be used to control the behaviour of the RING line to indicate URCs (both for idle interfaces and, if configured by the parameter "URC/Datamode/Ringline", if link is reserved) and, if configured, the indicator for incoming IP packets (see parameter "GPRS/RingOnIncomingData" (<groid>).
Parameter is local for the interface, volatile and will not be reset by AT&F.

“off“	URC is not indicated by RING.
“local“(P)	URC will be indicated by an activated RING line of the interface on which the URC appears
“asc0“	URC is indicated by an activated RING0 line.

<udri>(str)(+CSCS)

URC Datamode RING line

This parameter specifies whether RING or BREAK is used for the signaling of URCs when the ME-TE link is reserved (e.g. during circuit-switched data calls, fax connections, in GPRS data mode, in transparent TCP access mode opened with AT^SIST or during the execution of an AT command).
Parameter is global for all interfaces, volatile and will not be reset by AT&F.

“off“(P)	URC will be indicated by BREAK
“on“	URC is indicated by an active RING line for a time which is configured by the parameter "URC/Ringline/ActiveTime" (<urat>). The RING line which will be used, can be configured by the parameter "URC/Ringline" (<uri>).

`<urat>`(str)(+CSCS)

URC RING line Active Time

This parameter can be used to control how long the RING line is activated to indicate URCs (both for idle interfaces and, if configured by the parameter "URC/Datamode/Ringline" (`<udri>`), if link is reserved) and, if configured by the parameter "GPRS/RingOnIncomingData", to indicate incoming GPRS IP data packets (`<groid>`).
Parameter is global for all interfaces, volatile and will not be reset by `AT&F`.

"0"	RING line will be activated for a time between 4.6 and 9.2 ms.
"1"	RING line will be activated for about 100ms.
"2"(P)	RING line will be activated for about 1s.

`<mrs>`(str)

Modified Roaming Status

This parameter enables or disables the modified roaming status displayed by `AT+CREG`. If it is enabled, the registration status is "registered to home network" instead of "registered, roaming", when the registered PLMN and the Home PLMN from SIM Elementary File EF_{IMSI} are mapped to the same network name in the BGS2-E internal operator list.
Parameter is global for all interfaces, non-volatile and will not be reset by `AT&F`.

"0"(D)	Disable the Modified Roaming Status Display.
"1"	Enable the Modified Roaming Status Display.

Note

- Parameters "GPRS/ATS0/withAttach" (`<gs0aa>`) and "GPRS/RingOnIncomingData" (`<groid>`) are available only if ME supports GPRS.

Examples

EXAMPLE 1

Usage of "Audio/AMR":

```
AT+CSCS="UCS2"                                  Switch to UCS2 character set.
OK
AT^SCFG?                                        Query all parameters.
...
^SCFG:"Audio/AMR","0065006E00610062006C00650064"
...
OK
AT+CSCS="GSM"
OK
AT^SCFG?
...
^SCFG:"Audio/AMR","enabled"                     AMR will be used for any operator.
...
OK
AT^SCFG="Audio/AMR","disabled"
^SCFG:"Audio/AMR","disabled"                    AMR is disabled for any operator.
OK
AT^SCFG="Audio/AMR","23405"
^SCFG:"Audio/AMR","23405"                       AMR is disabled for any operator, but enabled for
                                                operator "23405".
OK
AT^SCFG="Audio/AMR","23203"
```

^SCFG:"Audio/AMR","23405","23203"	AMR is disabled for any operator, but enabled for operators "23405" and "23203".
OK	
AT^SCFG="Audio/AMR"	Query parameter "Audio/AMR"
^SCFG:"Audio/AMR","23405","23203"	
OK	

EXAMPLE 2

Usage of "URC/Ringline" and "URC/Datamode/Ringline":

AT+CSCS="GSM"	Switch to GSM character set.
OK	
AT^SCFG?	Query all parameters.
...	
^SCFG:"URC/Datamode/Ringline","off"	While the ME-TE link is reserved URCs will be indicated by BREAK.
^SCFG:"URC/Ringline","local"	URCs on this interface will be indicated by Ring line associated to the interface (e.g. RING0 for ASC0).
...	
OK	
AT^SCFG="URC/Datamode/Ringline","on"	
^SCFG:"URC/Datamode/Ringline","on"	While the ME-TE link is reserved URCs will be indicated by an activated "local" Ring line.
OK	
AT^SCFG="URC/Ringline","asc0"	
^SCFG:"URC/Ringline","asc0"	URCs on *this* interface will be indicated by an activated RING0 no matter whether or not the ME-TE link is reserved.
OK	
AT^SCFG="URC/Datamode/Ringline","off"	
^SCFG:"URC/Datamode/Ringline","off"	URCs on *this* interface will be indicated by an activated RING0 if the ME-TE link is *not* reserved and by BREAK if the ME-TE link is reserved.
OK	
AT^SCFG="URC/Ringline"	Disable any Ring line indication for URCs on this interface.
^SCFG:"URC/Ringline","off"	
OK	

2.14 AT^SM20 Set M20 compatibility mode

M20 is an earlier, widely used GSM engine. The AT^SM20 command selects different modes of responses returned upon execution of the commands ATD and sms commands like e.g. AT+CMGW. Please note that the AT^SM20 command has no effect on any other features and is not intended to adjust other differences between M20 and BGS2-E.

Syntax

Test Command

```
AT^SM20=?
```

Response(s)

```
OK
```

Read Command

```
AT^SM20?
```

Response(s)

```
^SM20:<CallMode>, <CmgwMode>
OK
```

Write Command

```
AT^SM20=<CallMode>[, <CmgwMode>]
```

Response(s)

```
OK
```

PIN	ASC0	ASC1	MUX1	MUX2	MUX3	🔔	Last
-	+	+	+	+	+	-	-

Parameter Description

<CallMode>(num)

Call setup response mode

Applies only to voice calls.

0	Set compatibility to Cinterion Wireless Modules. ME will return "OK" immediately after attempting a call with the ATD command. In case of failure, additional call release indications, such as "NO DIALTONE, "NO CARRIER", "BUSY" will follow.
1(&F)	Default call setup mode, compatible to M20. ME will return "OK" in case of a successful connection, otherwise one of the call release indications "NO DIALTONE, "NO CARRIER", "BUSY" are indicated.

<CmgwMode>(num)

Response mode for sending and writing short messages

Applies to the sms commands like e.g. AT+CMGS and AT+CMGW command.

0	Set compatibility to Cinterion Wireless Modules. ME will return +CMS ERROR: <err> when writing or sending of short messages fails.
1(&F)	Default mode for sending and writing short messages, compatible to M20. ME will return "OK", no matter whether or not sms command was successfully executed.

3. Status Control Commands

The AT Commands described in this chapter allow the external application to obtain various status information from the BGS2-E.

3.1 AT+CMER Common Event Reporting Configuration

AT+CMER controls details of the "+CIEV" URC presentation related to AT^SIND and AT+CIND. If registered via those commands the URCs are sent whenever a value of the related indicator changes.
In addition, AT+CMER controls "^SLCC" URCs related to AT^SLCC. For details refer to Call Status Information, AT^SLCC and AT^SCFG, parameter <sucs>.
The read command returns the URC presentation mode <mode> and among others, the indicator event reporting status <ind>.
The write command enables and disables the presentation of "+CIEV: <indDescr>, <indValue>$_1$[, <indValue>$_2$]" URCs. <indDescr> refers to the name of a "+CIEV" indicator and <indValue> is the new value of this indicator.
After AT+CMER has been switched on, initial URCs for all registered indicators will be issued. See examples provided in Section 3.2, AT+CIND and Section 3.3, AT^SIND.
AT+CNMI is a similar command to control SMS related URCs.

Syntax

Test Command

AT+CMER=?

Response(s)

+CMER: (list of supported<mode>s), (list of supported <keyp>s), (list of supported <disp>s), (list of supported <ind>s), (list of supported <bfr>s)
OK

Read Command

AT+CMER?

Response(s)

+CMER: <mode>, <keyp>, <disp>, <ind>, <bfr>
OK

Write Command

AT+CMER=[<mode>[, <keyp>[, <disp>[, <ind>[, <bfr>]]]]]

Response(s)

OK
ERROR
+CME ERROR: <err>

PIN	ASC0	ASC1	MUX1	MUX2	MUX3	Last	
-	+	+	+	+	+	-	-

Reference(s)

GSM 07.07

Unsolicited Result Code

+CIEV: <indDescr>, <indValue>$_1$[, <indValue>$_2$]
A value of an indicator has changed.

Parameter Description

<mode>(num)	
0(&F)	Always discard "+CIEV" and "^SLCC" URCs.
1	"+CIEV" and "^SLCC" URCs are forwarded directly to the TE. However, if this is not possible because ME-TE link is reserved, e.g. during a data call, these URCs are discarded.
2	"+CIEV" and "^SLCC" URCs are forwarded directly to the TE. However, if this is not possible because ME-TE link is reserved these URCs are buffered and flushed to the TE afterwards.
3	"+CIEV" and "^SLCC" URCs are forwarded directly to the TE. However, if this is not possible because ME-TE link is reserved these URCs are buffered and flushed to the TE afterwards. Additionally, while ME-TE link is reserved, buffered URCs are signaled to the TE via sending a BREAK or activating the RING line, according to AT^SCFG parameters <uri>, <udri> and <urat>.

<keyp>(num)	
0(&F)	Keypad event reporting is not supported by BGS2-E.

<disp>(num)	
0(&F)	Display event reporting is not supported by BGS2-E.

<ind>(num)	
0(&F)	Disable indicator event reporting.
2	Enable indicator event reporting.

<bfr>(num)	
0(&F)	ME's buffer of "+CIEV" and "^SLCC" URCs is cleared when <mode> 1, 2 or 3 is entered.

<indDescr>(str)

Name of indicator; for a list of all supported indicators please refer to AT+CIND and AT^SIND.

<indValue>(num)

Value of indicator; for a list of all values for the supported indicators please refer to AT+CIND and AT^SIND.

Note

- If ME operates on different instances (Multiplex mode channels 1, 2, 3 or ASC0/ASC1) avoid different settings for routing and indicating SMS. For example, if messages shall be routed directly to one instance of the TE (set with AT+CNMI, AT^SSDA), it is not possible to activate the presentation of URCs with AT+CMER or AT+CNMI on another instance. Any attempt to activate settings that conflict with existing settings on another interface, will result in "+CME ERROR", or accordingly "+CMS ERROR".

3.2 AT+CIND Indicator control

The AT+CIND command controls the presentation of Indicator Event Reports related to various functions such as signal quality, service availability, sound generation, indication of unread short messages, full SMS storage, call in progress or roaming activities.
Use of AT+CIND has become outdated. Rather we recommend the more powerful AT^SIND command which is easier to use and provides additional indicators. All indicators provided by AT+CIND can be handled with AT^SIND as well.

AT+CIND supports two ways to get the values related to indicators:

- One approach is to query the current status of each indicator by using the read command AT+CIND?. It returns the status no matter whether the indicator has been registered with the write command AT+CIND=[<mode>[,<mode>[,...]]].
- The other way is an event-driven notification based on the "+CIEV" URCs. In this case, the ME will automatically send a message to the application, whenever the value of an indicator changes. The application should be designed to react adequately when receiving a URC.
  The presentation of these URCs depends on two settings:
  - The indicators must be registered with the write command AT+CIND=[<mode>[,<mode>[,...]]]. When the ME is switched on all of them are in registered mode. Any indicator can be excluded if deregistered with <mode>=0. To register or deregister an indicator the AT+CIND write command requires to type the value <mode>=1 or 0 exactly at the position where the indicator is located in the list. This is not necessary with AT^SIND which allows to specify indicators by name. See examples below.
  - The presentation of the registered indicators must be enabled with AT+CMER.

Syntax

Test Command

```
AT+CIND=?
```

Response(s)

```
+CIND: (<indDescr>, list of supported <indValue>s)[, (<indDescr>, list of supported <indValue>s)[, ...]]
OK
```

Read Command

```
AT+CIND?
```

Response(s)

```
+CIND: <indValue>[, <indValue>[, ...]]
OK
ERROR
+CME ERROR: <err>
```

Write Command

```
AT+CIND=<mode>[, <mode>[, ...]]
```

Response(s)

```
OK
ERROR
+CME ERROR: <err>
```

PIN	ASC0	ASC1	MUX1	MUX2	MUX3		Last
-	+	+	+	+	+	-	-

Reference(s)

GSM 07.07

Parameter Description

<indValue>(num)

Integer type value, which shall be in range of corresponding <indDescr>

<indDescr>(str)	
String values and their <indValue> ranges. More indications are available via AT^SIND. Therefore use of AT^SIND for control of all indications is recommended. The following indications are accessible via AT+CIND:	
“battchg“	Battery charge level always equals 5, i.e. value is not relevant for BGS2-E
“signal“	Signal quality (0..7) or (99) if not measurable The indicated value is the bit error rate of the signal received. Bit errors are estimated values. See also AT+CSQ.
“service“	Service availability (0-1) 0: Not registered to any network 1: Registered to home network or, if "roam"=1 then registered to another network
“sounder“	Sounder activity (0-1) Reports every event that causes the ME to generate a tone. Value 1 means for example: Incoming call - ME is ringing. Note that the URC "+CIEV: sounder" will be output only if ringing tones are activated with AT^SRTC. Waiting call - ME generates waiting call tone (if call waiting is enabled). Outgoing call - ME generates Call Progress tone. Outgoing call - ME generates BUSY tone. The value changes to 0 when the tone stops.
“message“	Unread received short message (0-1)
“call“	Call in progress (0-1). Indicator value is "1" if at least one call is in state "active" or "held". Depending on the parameter <succ> selected with AT^SCFG the indicator "call" will be issued • when a state transition ends in state "active" or state "unknown", if <succ>="restricted", • when any state transition (including transitions beginning or ending in state "unknown") occurs in the list of active calls or when a traffic channel is established, if <succ>="verbose". Also refer to Section 7.1, Call Status Information.
“roam“	Roaming indicator (0-1) 0: Registered to home network or not registered 1: Registered to other network
“smsfull“	A short message memory storage in the MT has become full (1) or memory locations are available (0), i.e. range is (0-1)
“rssi“	Received signal (field) strength (0..5) or (99) if not measurable 0: signal strength ≤ -112 dBm 1-4: signal strength in 15 dB steps 5: signal strength ≥ -51 dBm 99: not known or not detectable Received signal (field) strength can also be obtained with AT+CSQ. However, the signal strength is scaled to value range 0..31 by this command.

<mode>(num)	
0	Indicator is deregistered. The indicator will not be presented as "+CIEV" URC, but can be queried with AT+CIND?.
[1](&F)(P)	Indicator is registered, indicator event report allowed.

Notes

- Due to its restrictive value range, indicator "call" does not clearly reflect specific call states (such as alerting, active, held etc.), but rather serves to trigger the application to retrieve the new call status from the list of current calls with the AT commands AT^SLCC, AT+CLCC or AT^SCNI.
- If AT^SCFG setting <succ>="verbose", indicator "call" will be issued also when a traffic channel is established, or when a call enters states "terminating" or "dropped" (see Call Status Information).
  In these cases, the relevant information about the cause of the display is available only from AT command AT^SLCC.

Examples

EXAMPLE 1

^SYSSTART	
AT+CPIN=9999	
OK	
AT+CIND?	
+CIND: 5,99,1,0,0,0,0,0	The battery is either full or no battery is connected to the ME. The bit error rate of the signal quality is not available (since there is no call in progress). The ME is registered to its home network.
OK	
AT+CMER=2,0,0,2	Now activate the Indicator Event Report with AT+CMER.
OK	
+CIEV: battchg,5	
+CIEV: signal,0	
+CIEV: service,1	
+CIEV: sounder,0	
+CIEV: message,0	
+CIEV: call,0	
+CIEV: roam,0	
+CIEV: smsfull,0	
+CIEV: rssi,5	Full receive signal strength.
ATD0123456;	Make a call.
OK	
+CIEV: sounder,1	A set of "+CIEV" URCs is received.
+CIEV: call,1	
+CIEV: sounder,0	
+CIEV: call,0	Called party hangs up.
NO CARRIER	
AT+CIND=,,,0,,0	Deregister the indicators "sounder" and "call".
OK	
ATD0123456;	Dial the same call.
OK	This time, no URCs are displayed.
NO CARRIER	Called party hangs up.

EXAMPLE 2

Deactivation of indicator "sounder" via AT+CIND

AT+CIND?	Query the current status of indicators.
+CIND: 5,99,1,0,1,0,0,0,4	
OK	
AT+CIND=,,,0	To deactivate indicator "sounder" (= fourth item in list of indicators).
OK	

EXAMPLE 3

Deactivation of indicator "sounder" via AT^SIND

AT^SIND="sounder",0	To deactivate indicator "sounder".
^SIND: sounder,0,0	
OK	

3.3 AT^SIND Extended Indicator Control

Designed for extended event indicator control AT^SIND

- offers greater flexibility than the standard command AT+CIND,
- offers several extra indicators,
- can show the current status of all indicators supported by AT+CIND and AT^SIND,
- can be used to register or deregister the indicators of both commands,
- displays all indicator event reports via "+CIEV" URCs.

Presentation mode of the generated URCs is controlled via AT+CMER.

AT^SIND read command provides a list of all indicators supported by AT+CIND and AT^SIND. Each indicator is represented with its registration mode and current value.
AT^SIND write command can be used to select a single indicator in order to modify its registration and to view the current value.

Syntax

Test Command

```
AT^SIND=?
```

Response(s)

```
^SIND: (<indDescr>, list of supported <indValue>s)[, (<indDescr>, list of supported <indValue>s)[, ...]], (list of supported <mode>s)
OK
```

Read Command

```
AT^SIND?
```

Response(s)

```
^SIND: <indDescr>, <mode>[, <indValue>]
[^SIND: <indDescr>, <mode>[, <indValue>]]
...

In case of <indDescr>="eons"
^SIND: "eons", <mode>, <eonsOperator>, <servProvider>

In case of <indDescr>="nitz"
^SIND: "nitz", <mode>, <nitzUT>, <nitzTZ>, <nitzDST>
OK
ERROR
+CME ERROR: <err>
```

Write Command

```
AT^SIND=<indDescr>, <mode>
```

Response(s)

```
^SIND: <indDescr>, <mode>[, <indValue>]

In case of: <indDescr>="eons" and <mode>=2
^SIND: "eons", <mode>, <indValue>, <eonsOperator>, <servProvider>

In case of: <indDescr>="nitz" and <mode>=2
^SIND: "nitz", <mode>, <nitzUT>, <nitzTZ>, <nitzDST>
OK
ERROR
+CME ERROR: <err>
```

PIN	ASC0	ASC1	MUX1	MUX2	MUX3		Last
-	+	+	+	+	+	-	-

Unsolicited Result Codes

URC 1

Format of the standard indicator:

`+CIEV: <indDescr>[, <indValue>]`

Indicator related event has occured, e.g. value has changed.

URC 2

Format of the "simdata" indicator follows `AT^SSTGI` response:

`+CIEV: <indDescr>, <cmdType>, <commandDetails>[, <pathLen>, <fileNum>, <fileList>]`

This URC is issued if BGS2-E is in Remote-SAT Autoresponse mode (`AT^SSTA`) and the SIM sent a SAT REFRESH command (i.e. `<cmdType>`=1) indicating that the content of one or more Elementary Files has been changed.
The ME holds a limited storage available to keep numerous "simdata" events received while `AT^SIND` setting was not enabled or ME-TE link was reserved, e.g. in online data mode. In case of storage overflow a special URC "+CIEV: simdata,1,254" is issued.

URC 3

Format of the Voice Message indicator, if the number of waiting messages is delivered by the network:

`+CIEV: <indDescr>, <indValue>, <vmCounter>`

If the number of waiting messages is not delivered the standard indicator applies.

URC 4

Format of the "eons" indicator:

`+CIEV: <indDescr>, <indValue>, <eonsOperator>, <servProvider>`

One URC is issued for each new LAI (Location Area Information) broadcast by the network.

URC 5

Format of the "nitz" indicator:

`+CIEV: <indDescr>, <nitzUT>, <nitzTZ>, <nitzDST>`

Parameter Description

`<indDescr>`(str)

String values and their `<indValue>` ranges.
All indicators supported by `AT+CIND` are accessible with this command, too. A detailed description of these indicators can be found there.
The following indicators are accessible via `AT^SIND` only:

“audio“	Activity of the built-in audio unit. 0 Audio unit not active. 1 Audio unit is active, for example: MO voice call: Indicator is output with value 1 when dialing starts. MT voice call: Indicator is output with value 1 when call is ringing.
“simdata“	SIM notifies of changed Elementary File data. All data provided by the SIM is stored in one of many of its so-called Elementary Files. This data can be queried by the TE directly via `AT+CRSM` and `AT+CSIM`, or implicitly via many AT commands presented by this document. For instance the SIM's identification number (IMSI) can be queried via `AT+CIMI`, but actually is stored in EF_{IMSI}, as defined in 3GPP TS 51.011 (GSM

11.11) [21].
However, be aware that this Elementary File data can be changed at any time by the network provider or an application running on the SIM. For details refer to SAT feature "Data Download to SIM" in 3GPP TS 11.14 (GSM 11.14) [22]. If this happens the TE urgently needs to refresh its internal representation (i.e. copy) of the changed data to ensure its safe and consistent use!
Therefore, a "+CIEV: "simdata"" URC is issued if BGS2-E is in Remote-SAT Autoresponse mode (AT^SSTA) and the SIM sent a SAT REFRESH command indicating that the content of one or more Elementary Files has been changed.

“simtray“

Indication of SIM tray status as indicated by CCIN line. Result does not depend on whether the tray holds a SIM or not.
Generating a URC on status change is not supported.
0 SIM tray empty.
1 SIM tray plugged in.

“vmwait1“

Voice Message Waiting Indication for line 1
0 The value 0 notifies that no new voice message is available, and is provided by the service center to clear the voice message indication after the subscriber has retrieved all voice messages.
1 The value 1 notifies the subscriber that the mailbox contains one or several messages.
"vmwait1" and "vmwait2" indicate the receipt of a special short message with a Voice Message Waiting Indicator. The service must be provisioned by the operator.
The numbers 1 or 2 in "vmwait1" and "vmwait2" are related to the two lines of the Alternate Line Service (ALS), also defined in CPHS Phase 2 standard. For further details refer to the AT^SALS command.
The presentation mode of the indicator varies with the operator: If more than one message are waiting, some operators only indicate the first one, others deliver the indicator each time a new voice message is put into the mailbox. After the subscriber has retrieved all voice messages the service center automatically sends another message indication which provides the value 0.
Some operators may also send the number of waiting voice messages along with the indication. In this case, the number will be displayed by the BGS2-E as part of the URC. For example, "+CIEV: vmwait1,1,5" notifies that five new voice messages are waiting. However, it should be noted that neither the read command AT^SIND? nor the write command AT^SIND=<mode>,2 display the number of waiting messages.
The "vmwait" indicators do not apply if a network provider signals new voice mail(s) via standard SMS. In this case the indicator "message" will be displayed (see AT+CIND).

“vmwait2“

Voice Message Waiting Indication for line 2
0 See description of "vmwait1".
1 See description of "vmwait1".

“ciphcall“

Ciphering Status Change Indication
0 Current call or SMS is not ciphered.
1 Current call or SMS is ciphered.
As stated in GSM specifications 02.07 and 02.09 the ciphering indicator feature allows the BGS2-E to detect that ciphering is not switched on and to indicate this to the user.
The ciphering indicator feature may be disabled by the home network operator setting data in the "administrative data" field (EF_{AD}) in the SIM, as defined in 3GPP TS 51.011 (GSM 11.11) [21].
If this feature is not disabled by the SIM, then whenever a connection is in place, which is, or becomes unenciphered, an indication shall be given to the user. This enables the user's decision how to proceed.
Read command returns valid ciphering status only if a call is in progress or active.
If EF_{AD} setting disables the ciphering indicator feature read command always indicates a ciphered link and no URC presentaion will take place.

The following restrictions apply if the same serial channel is used for AT^SIND "ciphcall" indication and for the action triggering this URC. In general, the recommended solution is to use a dedicated channel for all status signalling via URCs.

- If an unciphered mobile originated SMS is performed, AT^SIND "ciphcall" URCs on the same serial channel will be issued after the related "OK" and indicate the ciphering state at *this* time. Because the SMS is already sent at this time, two URCs will be issued on this channel, but both are indicating that ciphering is enabled.
- If an unciphered mobile originated data call is performed, AT^SIND "ciphcall" URCs on the same serial channel will be issued after the interface is not longer blocked by the call (call is released or temporarily stopped) and indicate the ciphering state at *this* time.

“eons“

Enhanced Operator Name String (EONS) Indication
The Enhanced Operator Name String indicator feature allows the BGS2-E to output various operator names for different PLMN identities via URC. It also allows the output of a different operator name based on a subset of the registered network by using a range of Location Area Codes (LACs) or a single LAC. The presentation of the "eons" indicator is determined by network activity. For example, the indicator appears every time a location update occurs or a NITZ information is sent, no matter whether or not the status of the EONS information has changed. This means that the same EONS information may be reported several times.
The EONS tables are stored on the SIM and will be read at power-up.
Following are the SIM Elementary Files that are affected by the introduction of EONS feature in the SIM:
EF_{SST} (SIM Service Table) - describes which features are active.
EF_{OPL} (Operator PLMN List) - contains the PLMN identification and location ID together with the index of the corresponding PNN record
EF_{PNN} (PLMN Network Name) - contains the full and short form version of the network name for the registered PLMN
If the Operator Name Source is CPHS Operator Name String long and short form, refer to <indValue>, the following two SIM Elementary Files will be used:
$EF_{ONString}$ (Operator Name String) - contains the name of the PLMN operator who issued the SIM.
$EF_{OPShort}$ (Operator Name Short form) - contains a short form of the name of the PLMN operator who issued the SIM.

“steerroam“

Steering-of-roaming Indication
The "steerroam" Indication supports so called "steering-of-roaming" ("SOR") techniques of some providers.
If a ME roaming within a certain country tries to register to a VPLMN (visited PLMN), the VPLMN will ask the HLR of the subscribers home operator for authorization credentials of the subscriber. Steering-of-roaming means that instead of sending those credentials, the HLR sends back an error message which will make the VPLMN send back a location update reject to the ME. This location updating procedure is described in 3GPP TS 24.008 chapter 4.4.4.9.
When ME is attempting to register into a PLMN and get updating rejected with reject cause 17 then ME stays in limited service on the configured network, ME may reattempt network registration four times, and after that ME will inform the TE via Steering-of-roaming Indication URC "steerroam" that the registration attempt has failed.
When the ME is in manual PLMN selection mode (see AT+COPS) the TE has to start a new manual PLMN search to select a different network or switch to automatic PLMN selection mode.
When ME is in automatic PLMN selection mode (see AT+COPS) ME itself attempts a PLMN search to select a different network.

“nitz“	Network Identity and Time Zone indication This indicator shows the time relevant information elements of an MM Information (MMI) or GMM Information (GMMI) message received from the network (see GSM 24.008, ch. 9.2.15a and 9.4.19). The network usually sends a NITZ indicator when the mobile attaches to the network, when it enters a location area with different time zone or when a daylight change occurs. A NITZ indicator may consist of the following parameters: Universal Time (UT), local Time Zone (TZ), Daylight Saving Time (DST). All information elements of MMI/GMMI are optional and therefore, the presentation of the parameters <nitzUT>, <nitzTZ>, <nitzDST> varies with the network. For example, the network may send all three parameters UT, TZ, DST, or only UT and TZ or only TZ. UT is indicated in usual date/time format and represents the current world time (GMT) at the moment when sent. TZ is given as a positive (east) or negative (west) offset from UT in units of 15 minutes. DST shows the number of hours added to the local TZ because of daylight saving time (summertime) adjustment. Usually DST is 1 hour but it can be also 2 hours in certain locations. Example for time and time zone with DST: +CIEV: nitz,"04/07/23,13:39:20",-28,1 In this example TZ is -28, showing a time offset of -7 hours (west) to Universal Time/GMT (which never changes for DST). DST is 1 which indicates that one hour was added to TZ because of Daylight Saving Time. If a network does not send the DST parameter the TZ value would be -32 (8 hours west) as would be done in winter: +CIEV: nitz,"04/11/23,13:39:20",-32 Please be aware that despite the last NITZ value can be looked up again via "AT^SIND=nitz,2" the returned values may be out of date. Especially the UT value is obsolete because there is no internal NITZ clock and therefore no continuation of UT. NITZ values are lost when the ME detaches from network. Also when a manual network selection fails and the ME automatically falls back to the previous network the NITZ values cannot be recalled. Nevertheless an indicated time zone is valid until a new MMI/GMMI will trigger another NITZ indication.

<indValue>(num)

Integer type value in the range stated above for the corresponding <indDescr>.

Notes specific to EONS feature:
If indicator is "eons", <indValue> is a type associated to the operator name according to GSM 22.101 [23]. This type depends on the source of the operator name.
Priority of types associated to the operator names is defined as follows (the type listed first has the highest priority). If a type cannot be indicated the next one will be used.

0	Not registered.
1	EF_{OPL} and EF_{PNN} (alphanumeric format, can contain up to 24 characters.)
2	Operator Name String in long and short format according to Common PCN Handset Specification (CPHS) [24] (alphanumeric format, can contain up to 16 characters).
3	Name information received by the NITZ service long and short form (alphanumeric format, can contain up to 16 characters). The short form will be displayed only if $EF_{OPShort}$ from CPHS is available.
4	Any operator name stored internal to the ME (alphanumeric format, can contain up to 16 characters).
5	Broadcast MCC-MNC (numeric format which consists of a 3-digit country code plus a 2- or 3-digit network code).

If the type is 2, 4 or 5, AT+COPS with the appropriate <mode> displays the same operator name.

<mode>(num)	
0	Indicator is deregistered, i.e. no such indicator event report (URC) will be issued. <mode>=0 is power-up and factory default of indicators defined by AT^SIND only.
1	Indicator is registered. • Indicator event reports are controlled via AT+CMER. • All indicators can be registered or deregistered via AT^SIND, but different default settings apply: Power-up and factory default of the indicators supported by AT+CIND is <mode>=1, while, as stated above, indicators defined by AT^SIND only are set to <mode>=0.
2	Query the registration status and the current value of a single indicator type.

<vmCounter>

If delivered by the network: Number of new voice messages sent as part of the Voice Message Waiting Indicator. Refer to <indDescr>.

<eonsOperator>

Operator in format which depends on the type associated to the operator name. Refer to <indValue>.

<servProvider>(str)

Service Provider Name according to the status settings (SIM Service No. 17) in the SIM Service Table (SST) of the SIM.

<nitzUT>

Universal Time delivered as part of the "nitz" Indicator. Refer to <indDescr>.

<nitzTZ>

Time Zone delivered as part of the "nitz" Indicator. Refer to <indDescr>.

<nitzDST>

Adjustment for Daylight Saving Time as part of the "nitz" Indicator. Refer to <indDescr>.

Example

Activation and use of indicator "audio":

AT^SIND="audio",1	You register the indicator "audio".
^SIND: audio,1,0	
OK	
AT+CMER=2,,,2	You activate the Indicator Event Report with AT+CMER.
OK	A set of all registered URCs is presented. (Please note that the example includes the indicators registered due to the power-up default settings of AT+CIND.)
+CIEV: battchg,5	
+CIEV: signal,0	
+CIEV: service,1	
+CIEV: sounder,0	
+CIEV: message,1	
+CIEV: call,0	
+CIEV: roam,0	

```
+CIEV: smsfull,0
+CIEV: rssi,4
+CIEV: audio,0
ATD030123456;                   You make a call.
OK
+CIEV: audio,1
+CIEV: sounder,1
+CIEV: call,1
+CIEV: signal,0
+CIEV: sounder,0
ATH                             You hang up.
OK
+CIEV: call,0
+CIEV: rssi,3
+CIEV: audio,0
+CIEV: signal,0
+CIEV: rssi,4
```

3.4 AT+CEER Extended Error Report

AT+CEER returns an extended error report regarding the reason of the last

- call release
- failure to set up a call (both mobile originated or terminated)
- failure to modify a call by using Supplementary Services
- failed attempt to activate, register, query, deactivate or deregister a Supplementary Service
- unsuccessful GPRS attach or unsuccessful PDP context activation
- GPRS detach or PDP context deactivation

The release cause report is presented in numeric format. Default output in case of a none-error-situation is +CEER: 0,0,0. A description associated with each number can be found in the tables given in the following subclauses and the relevant GSM specifications.
The first parameter <locationID> serves to locate the other two parameters. Depending on the failure or release cause either <reason> or <ssRelease> are applicable, i.e. if <reason> ≠ 0, then <ssRelease> = 0. Vice versa, if <reason> = 0, then <ssRelease> may be ≠ 0.
In addition to AT+CEER, the command ATS18 can be used to check especially the status of fax and data calls.
When losing network coverage the BGS2-E will disconnect the call. In this case, no network release cause is available, and AT+CEER returns only the default values +CEER: 0,0,0.

Syntax

Test Command

```
AT+CEER=?
```

Response(s)

```
OK
ERROR
+CME ERROR: <err>
```

Exec Command

```
AT+CEER
```

Response(s)

```
+CEER: <locationID>, <reason>, <ssRelease>
OK
ERROR
+CME ERROR: <err>
```

PIN	ASC0	ASC1	MUX1	MUX2	MUX3		Last
+	+	+	+	+	+	-	-

Reference(s)

GSM 07.07

Parameter Description

<locationID>(num)

Location ID as number code. Location IDs are listed in Section 3.4.1, Cause Location ID for the extended error report. Most IDs are connected to another table that contains a list of <reason>s or <ssRelease>s.

<reason>(num)

Reason for last call release as number code. The number codes are listed in several tables, sorted by different categories in the following subclauses. The tables can be found proceeding from the Location ID given in Section 3.4.1, Cause Location ID for the extended error report.

`<ssRelease>`(num)

Release cause for last Supplementary Service call (listed in Section 3.4.10, GSM Release cause for Supplementary Service Call) or last call related use of a Supplementary Service (listed in Section 3.4.11, Proprietary release cause for Call-related Supplementary Services (CRSS)) or release cause for supplementary services entity or manager (listed in Section 3.4.12, Proprietary release cause for Supplementary Services Entity and Section 3.4.13, Proprietary release cause for Supplementary Services Manager).

Examples

EXAMPLE 1

`ATD"01751223344";`	A mobile originated call is rejected by the remote party.
`NO CARRIER`	Call setup is terminated with NO CARRIER.
`AT+CEER`	To check the cause, the caller enters AT+CEER.
`+CEER: 8,21,0`	The Location ID 8 in Section 3.4.1 points to Section 3.4.7, where 21 = "call rejected". 0 = "no error" refers to parameter `<ssRelease>` that is not applicable.
`OK`	

EXAMPLE 2

The user attempts to activate call barring, but uses a wrong password.

`AT+clck=oi,1,"0000",3`	
`+CME ERROR: incorrect password`	
`AT+CEER`	
`+CEER: 35,0,38`	The Location ID 35 in Section 3.4.1 points to Section 3.4.10, where 38 = "negative PW check" may mean that a wrong password was tried for the first time. 0 = "no error" refers to parameter `<reason>` that is not applicable.
`OK`	

3.4.1 Cause Location ID for the extended error report

ID	Description	Causes
0	no error (default)	--
1	Proprietary L2 cause	Section 3.4.2
2	GSM cause for L3 radio resource sublayer (GSM 04.08 annex F)	Section 3.4.3
3	Proprietary cause for L3 radio resource sublayer	Section 3.4.4
4	GSM cause for L3 mobility management (GSM 04.08 annex G)	Section 3.4.5
5	Proprietary cause for L3 mobility management	Section 3.4.6
6	GSM cause for L3 mobility management via MMR-SAP (GSM 04.08 annex G)	--
7	Proprietary cause for L3 mobility management via MMR-SAP	--
8	GSM cause for L3 call control (GSM 04.08 10.5.4.11 and annex H)	Section 3.4.7
9	Proprietary cause for L3 call control	Section 3.4.8
11	Proprietary cause for L3 advice of charge entity	Section 3.4.9
12	GSM cause for L3 SMS CP entity	--
13	Proprietary cause for L3 SMS CP entity	--
14	GSM cause for L3 SMS RL entity	--
15	Proprietary cause for L3 SMS RL entity	--
16	GSM cause for L3 SMS TL entity	--
17	Proprietary cause for L3 SMS TL entity	--
18	Proprietary cause for DSM entity	--

ID	Description	Causes
21	GSM cause for L3 call-related supplementary services	Section 3.4.10
22	Proprietary cause for L3 call-related supplementary services	Section 3.4.11
32	Proprietary cause for supplementary services entity	Section 3.4.12
33	Proprietary cause for supplementary services manager	Section 3.4.13
34	network cause for supplementary services (GSM 04.08 10.5.4.11 and annex H)	--
35	supplementary services network error (GSM 04.80 3.6.6)	--
48	GSM cause for GPRS mobility management (GSM 04.08 annex G.6)	--
49	Proprietary cause for GPRS mobility management	Section 3.4.14
50	GSM cause for session management (GSM 04.08 annex I)	--
51	Proprietary cause for session management	Section 3.4.15
127	GSM cause for protocol module or other local cause	Section 3.4.16
128	supplementary services general problem (GSM 04.80 3.6.7)	--
129	supplementary services invoke problem (GSM 04.80 3.6.7)	--
130	supplementary services result problem (GSM 04.80 3.6.7)	--
131	supplementary services error problem (GSM 04.80 3.6.7)	--
241	Proprietary cause for GPRS API	Section 3.4.17
242	Proprietary cause for link management	Section 3.4.18
243	Proprietary cause for PPP/IP-stack	Section 3.4.19

3.4.2 Proprietary L2 cause

Number	Description
249	no network response received, e.g. due to low signal quality

3.4.3 GSM release cause for L3 Radio Resource (RR)

Number	Description
0	normal event
1	abnormal release, unspecified
2	abnormal release, channel unacceptable
3	abnormal release, timer expired
4	abnormal release, no activity on the radio path
5	pre-emptive release
8	handover impossible, timing advance out of range
9	channel mode unacceptable
10	frequency not implemented
65	call already cleared
95	semantically incorrect message
96	invalid mandatory information
97	message type non-existent or not implemented

Number	Description
98	message type not compatible with protocol state
100	conditional information element error
101	no cell allocation available
111	protocol error unspecified

3.4.4 Proprietary release cause for L3 Radio Resource (RR)

Number	Description
1	RACCHs not answered
2	RACCHs rejected
3	access class of the SIM is barred by the network provider
4	SABM failure
5	radio link counter expiry or perform abnormal release
6	confirm ABORT of the MM
7	respond to DEACT REQ
8	loss of coverage
9	reestablishment not possible
10	T3122 still running
11	cell selection in progress
12	responding to paging
13	location area code has changed
14	circuit switched not available

3.4.5 GSM release cause for Mobility Management (MM) or Session Management (SM)

Number	Description
causes related to MS identification	
2	IMSI unknown in HLR
3	illegal MS
4	IMSI unknown in VLR
5	IMEI not accepted
6	illegal ME
cause related to subscription options	
11	PLMN not allowed
12	location area not allowed
13	roaming not allowed in this location area
causes related to PLMN specific network failures and congestion	
17	network failure
22	congestion

Number	Description
causes related to nature of request	
32	service option not supported
33	requested service option not subscribed
34	service option temporary out of order
38	call cannot be identified
causes related to invalid messages	
95	semantically incorrect message
96	invalid mandatory information
97	message type non-existent or not implemented
98	message not compatible with protocol state
99	information element non-existent or not implemented
100	conditional information element error
101	messages not compatible with protocol state
111	protocol error, unspecified
causes related to GPRS	
7	GPRS services not allowed
8	GPRS services not allowed in combination with non-GPRS services
9	MS identity cannot be identified by the network
10	implicitly detached
14	GPRS services not allowed in current PLMN
15	no suitable cells in location area
16	MSC temporary unreachable
36	regular PDP context deactivation
37	QoS not accepted
40	No PDP context activated

3.4.6 Proprietary release cause for L3 Mobility Management (MM)

Number	Description
1	no SIM available
8	no MM connection
9	authentification failure
11	MM performs detach
17	registration failed and will be re-attempted in a short term
18	CM connection establishment failed
19	registration failed and will be re-attempted in a long term
20	RR connection is released
21	MS tries to register
22	SPLMN is not available
23	an MTC is in progress

Number	Description
24	a PLMN scan is in progress
25	the MM is detached, the MS is in MS class C GPRS only

3.4.7 GSM release cause for L3 Call Control (CC)

Number	Description
0	no error
Normal class (all other values in the range 0 to 31 shall be treated as cause 31)	
1	unassigned (unallocated) number
2	service not available
3	no route to destination
6	channel unacceptable
8	operator determined barring
9	FDN mismatch
16	normal call clearing
17	user busy
18	no user responding
19	user alerting, no answer
21	call rejected
22	number changed
25	pre-emption
26	non-selected user clearing
27	destination out of order
28	invalid number format (incomplete number)
29	facility rejected
30	response to STATUS ENQUIRY
31	normal, unspecified
Resource unavailable class (all other values in the range 32 to 47 shall be treated as cause 47)	
34	no circuit/channel available
38	network out of order
41	temporary failure
42	switching equipment congestion
43	access information discarded
44	requested circuit/channel not available
47	resource unavailable, unspecified
Service or option not available class (all other values in the range 48 to 63 shall be treated as cause 63)	
49	quality of service unavailable
50	requested facility not subscribed
55	incoming calls barred within the CUG
57	bearer capability not authorized
58	bearer capability not presently available

Number	Description
63	service or option not available, unspecified
Service or option not implemented (all other values in the range 64 to 79 shall be treated as cause 79)	
65	bearer service not implemented
68	ACM equal or greater than ACM max
69	requested facility not implemented
70	only restricted digital information bearer capability is available
79	service or option not implemented, unspecified
Invalid message (e.g. parameter out of range) class (all other values in the range 80 to 95 shall be treated as cause 95)	
81	invalid transaction identifier value
87	user not member of CUG
88	incompatible destination
91	invalid transit network selection
95	semantically incorrect message
Protocol error (e.g. unknown message) class (all other values in the range 96 to 111 shall be treated as cause 111)	
96	invalid mandatory information
97	message type non-existant or not implemented
98	message type not comaptible with protocol state
99	information element non-existent or not implemented
100	conditional information element error
101	message not compatible with protocol
102	recovery on timer expiry
111	protocol error, unspecified
Interworking class (all other values in the range 112 to 127 shall be treated as cause 127)	
127	interworking, unspecified

3.4.8 Proprietary release cause for L3 Call Control (CC)

Number	Description
1	call dropped
2	service not available
3	hold procedure not available
4	temporary no service, previous procedure not yet finished
5	no speech service available
6	call reestablishment procedure active
7	mobile received a release (complete) message during a modify procedure (modify reject)
8	call clearing, because loss of radio connection, if no reestablishment is allowed (call not active)
10	number not included in FDN list
11	zero length called party number
12	no more CC transactions available
13	outgoing calls barred

Number	Description
14	number is blacklisted in auto-call retry list
15	auto-call number is not in list and list is full
16	auto-call redial before minimum time elapsed
17	requesting entity is not in control of CC
notifications	
300	called party barred incoming call

3.4.9 Proprietary release cause for L3 Advice of Charge (AOC)

Number	Description
1	SIM data not available
2	SIM does not support AOC
3	SIM data access error
4	ACM limit almost reached ACM range overflow
5	ACM range overflow

3.4.10 GSM Release cause for Supplementary Service Call

Number	Description
0	no error (default)
1	unknown subscriber
9	illegal subscriber
10	bearer service not provisioned
11	teleservice not provisioned
12	illegal equipment
13	call barred
15	CUG reject
16	illegal SS operation
17	SS error status
18	SS not available
19	SS subscription violation
20	SS incompatibility
21	facility not supported
27	absent subscriber
29	short term denial
30	long term denial
34	system failure
35	data missing
36	unexpected data value
37	PW registration failure

Number	Description
38	negative PW check
43	number of PW attempts violation
71	unknown alphabet
72	USSD busy
126	max nums of MPTY calls exceeded
127	resources not available
general problem codes	
300	unrecognized component
301	mistyped component
302	badly structured component
invoke problem codes	
303	duplicate invoke ID
304	unrecognized operation
305	mistyped parameter
306	resource limitation
307	initiating release
308	unrecognized linked ID
309	linked response unexpected
310	unexpected linked operation
return result problem codes	
311	unrecognize invoke ID
312	return result unexpected
313	mistyped parameter
return error problem codes	
314	unrecognized invoke ID
315	return error unexpected
316	unrecognized error
317	unexpected error
318	mistyped parameter

3.4.11 Proprietary release cause for Call-related Supplementary Services (CRSS)

Number	Description
0	ECT procedure failed (timer expired)
1	call has been cleared without receiving an answer to ECT request
2	initial conditions not fulfilled (one active, one held call)
3	received "return error"
4	call has been cleared without receiving an answer to CCBS request
5	initial conditions for CCBS not fulfilled (Idle CRSS)
causes related to nature of request	

Number	Description
25	LLC or SNDCP failure
26	insufficient resources
27	unknown or missing access point name
28	unknown PDP address or PDP type
29	user authentification failed
30	activation rejected by GGSN
31	activation rejected, unspecified
32	service option not supported
33	requested service option not subscribed
34	service option temporary out of order
35	NSAPI already used
36	regular PDP context deactivation
37	QoS not accepted
38	network failure
39	reactivation requested
40	feature not supported
causes related to invalid messages	
81	invalid transaction identifier value
95	semantically incorrect message
96	invalid mandatory information
97	message type non-existant or not implemented
98	message type not comaptible with protocol state
99	information element non-existent or not implemented
100	conditional information element error
101	message not compatible with protocol
111	protocol error, unspecified

3.4.12 Proprietary release cause for Supplementary Services Entity

Number	Description
1	Normal
2	MM (Mobility Managment) error
3	MM (Mobility Managment) release
4	SIM or power off
5	ASN (Abstract Syntax Notation) error
6	Unexpected release
7	MTC (Mobile Terminated Core) collision
8	Out of memory
9	RX erraneous message
10	RX registration on activating transaction identifier

3.4.13 Proprietary release cause for Supplementary Services Manager

Number	Description
0	Out of memory
1	Missing parameter
2	Unexpected parameter
3	Activate not allowed
4	Deactivate not allowed
5	Registrate not allowed
6	Erase not allowed
7	Interrogate not allowed
8	Illegal request
9	Null request
10	Busy
11	Rx unexpected facility information element
12	Rx release complete return error
13	Rx release complete return reject
14	Rx release complete without facility information element
15	Rx release complete with erroneous facility information element
16	Rx facility with erroneous information element
17	Rx return result with unexpected operator code
18	Rx return result with illegal operator code
19	Rx return result with unexpected empty result
20	Rx request barred
21	No error multiple TA (only internal)
22	Modified (used for SS AL)
23	Alphabet not IA5 compatible (the USSD string requested for transmission could not be converted into the IA5 alphabet when trying to re-transmit the string according to phase 1. The transmission was not successful)
24	No fallback in application mode (the USSD string transmission according to phase 2 was rejected by the network but the MS is not allowed to re-transmit the string when using USSD application mode)
25	No TI available (there are no transaction identifiers left to fullfil the request)
26	No peer response

3.4.14 Proprietary release cause for GPRS Mobility Management

Number	Description
0	Unknown
1	Authentication and ciphering reject
17	Internal error (not used)
19	Power off
20	SIM invalid

Number	Description
21	SIM out
22	GMM (GPRS Mobility Management) is in deactivation (not used)
23	Virtual detach
32	Successful update
33	Fifth attempt
34	VLR (Visitor Location Register) failure
35	Local detach
36	Attempt counter increment
48	GAPI initiated detach
49	Network initiated detach with reattach
50	Network initiated detach no reattach no cause
51	Paging with IMSI
64	MS not GPRS attached
65	RAT (Radio Access Technology) is GSM/GPRS
66	GPRS temporary not available (includes no coverage)
80	T3317 expiry
81	PS connection already released

3.4.15 Proprietary release cause for Session Management (SM)

Number	Description
1	The MS has not got any answer to the activate (secondary) PDP context request message sent five times to the network
2	The MS has not got any answer to the MODIFY PDP CONTEXT REQUEST message sent five times to the network
3	A MT PDP context which is active or in the activation process is deactivated because another MT PDP context with the same TI is requested by the network to be activated
4	A MT PDP context which is active or in the activation process is deactivated because another MT PDP context with the same TI is requested by the network to be activated. The activation request is rejected by the SM sending the cause 'insufficient resources' to the network because the SM was not able to perform the necessary comparisons for a static PDP address collision detection.
5	A MT PDP context which is active or in the activation process is deactivated because another MT PDP context with the same TI is requested by the network to be activated. As a static PDP address collision with an MO activating PDP context has been detected by the SM the SM discards the activation request
6	A MT PDP context request has been indicated but could not be processed in time. The activation request is rejected by the SM sending the cause 'insufficient resources' to the network.
7	GAPI rejected a PDP context activation request or rejected of a activation request for a secondary PDP context.
8	As the consequence of a handover from a release 1999 to a GPRS release 1997/98 network all PDP contexts with the same PDP address and APN are deactivated except the one with the highest QoS.
9	deactivation of a PDP context initiated by the RABM.

Number	Description
10	The GAPI has requested either a secondary PDP context activation or a MS initiated PDP context modification in a release 1997/98 network. As these features both are not supported by in Release 1997/98, the SM rejects the request.
11	rejection of a PDP context modification request because of missing a new QoS or a new TFT.
12	The network requests to activate a PDP context with the same combination of APN and PDP address as an already activated PDP context. The MS has to deactivate the already activated PDP context and all linked PDP contexts (matching the combination of APN and PDP address) locally.
13	The network indicates that a PDP context which is regarded as not inactive by the MS is regarded as inactive by the network. The MS has to deactivate this PDP context locally.

3.4.16 GSM cause for L3 Protocol module or other local cause

Number	Description
2	no detailed cause

3.4.17 Proprietary release cause for GPRS API

Number	Description
0	regular deactivation of the call
1	action temporary not allowed
2	wrong connection type
3	specified data service profile invalid
4	PDP type or address is unknown
5	FDN check was not successful; GPRS attach and PDP context activation blocked
9	GPRS service not available
255	undefined

3.4.18 Proprietary release cause for Link Management

Number	Description
1	ActionTempNotAllowed (Mobile temporary busy due to previous conflicting action)
2	Invalid bearer setting
3	Data service profile not valid or complete
4	GPRS Data service profile not valid or complete
5	CSD Data service profile not valid or complete
6	CSD Service not allowed due to MS Class setting CG
17	CSD Modem Instance in already in use (e.g. Data cable is connected when WAP CSD connection shall be established)
18	CSD Modem is not responding
19	Modem returned ERROR
20	CSD Modem doesn't answered not within specified time

Number	Description
21	CSD Modem answered call request NO CARRIER (call estabishment failed)
22	CSD Modem answered call request with NO DIALTONE (no call possible at the moment e.g. no network available)
23	CSD Modem answered call request with BUSY (called subscriber is busy)
24	CSD Modem call establishment timed out (e.g. called subscriber modem doesn't answer)
25	CSD Modem established call lost (e.g. called subscriber hang up, network lost)

3.4.19 Proprietary release cause for PPP/IP-Stack

Number	Description
0	regular call deactivation
1	LCP stopped
255	undefined

3.5 ATS18 Extended call release report

ATS18 controls the presentation of extended call release reports for circuit switched fax and data calls. Extended call release reports related to voice calls are controlled via AT+CEER.

The call release report is presented in numeric format and shows as follows:

+CAUSE: <locationID>:<reason>

If enabled the message will be reported every time a fax or data call is released or fails to be established.

Syntax

Read Command

ATS18?

Response(s)

<n>
OK

Write Command

ATS18=<n>

Response(s)

OK
ERROR

PIN	ASC0	ASC1	MUX1	MUX2	MUX3		Last
-	+	-	+	-	-	-	-

Reference(s)

V.250

Parameter Description

<n>(num)(&W)(&V)

An odd number enables the presentation of the extended call release report. Any even number disables this feature.

0(&F)...255

<locationID>(num)

Location ID as number code, see also <locationID> of AT+CEER.
Location IDs are listed in Section 3.4.1, Cause Location ID for the extended error report. Each ID is related to another table that contains a list of <reason>s.

<reason>(num)

Reason for last call release as number code (see also <reason> of AT+CEER).
<reason> numbers and the associated descriptions are listed in several tables, sorted by different categories at AT+CEER. The tables can be found proceeding from the Location IDs listed in Section 3.4.1, Cause Location ID for the extended error report.

Examples

EXAMPLE 1

`ATS18=1`	Enables the presentation of extended call release reports.
`OK`	
`ATD03012345678`	Now, a mobile originated data call fails.
`+CAUSE: 8:17`	An extended error report is output, followed by the result code BUSY.
`BUSY`	The Location ID 8 stated in Section 3.4.1 points to Section 3.4.7, with 17 = "User busy".

EXAMPLE 2

`ATS18=1`	Enables the presentation of extended call release reports.
`OK`	
`ATD03012345678`	Now, a mobile originated data call is set up.
`CONNECT 9600/RLP`	
`Hello,....`	
`+++`	Call ends after remote party hung up.
`+CAUSE: 8:16`	Normal call release is reported, followed by the result code NO CARRIER.
`NO CARRIER`	The Location ID 8 stated in Section 3.4.1 points to Section 3.4.7, with 16 = "Normal call clearing".

3.6 AT+CPAS Activity Status

AT+CPAS execute command queries BGS2-E's activity status.

Syntax

Test Command
AT+CPAS=?
Response(s)
+CPAS: (list of supported<pas>s) OK

Exec Command
AT+CPAS
Response(s)
+CPAS: <pas> OK

PIN	ASC0	ASC1	MUX1	MUX2	MUX3		Last
-	+	+	+	+	+	-	-

Reference(s)
GSM 07.07

Parameter Description

<pas>(num)	
0	Ready
3	Incoming call (ringing)
4	Call in progress or call hold

3.7 AT+WS46 Select wireless network

Syntax

Test Command
AT+WS46=?
Response(s)
+WS46: (list of supported<n>s) OK

Read Command
AT+WS46?
Response(s)
<n> OK

Write Command
AT+WS46=[<n>]
Response(s)
OK ERROR +CME ERROR: <err>

PIN	ASC0	ASC1	MUX1	MUX2	MUX3		Last
-	+	+	+	+	+	-	-

Reference(s)
GSM 07.07

Parameter Description

<n>(num)	
12	GSM digital cellular

4. Serial Interface Control Commands

The AT Commands described in this chapter allow the external application to determine various settings related to the BGS2-E's serial interface.

4.1 AT\Q Flow Control

AT\Q allows to configure flow control on the BGS2-E's asynchronous serial interfaces ASC0 and ASC1. It is strongly recommended to always use RTS/CTS hardware flow control.

Syntax

Exec Command
AT\Q[<n>]
Response(s)
OK If RTS/CTS flow control is not supported by interface and <n> is 2 or 3: ERROR

PIN	ASC0	ASC1	MUX1	MUX2	MUX3		Last
-	+	+	±	±	±	-	-

Parameter Description

<n>(num)(&W)(&V)	
[0](&F)	Disable flow control
1	XON/XOFF software flow control
2	Only CTS flow control by ME
3	RTS/CTS hardware flow control

Notes

- When using XON/XOFF flow control (AT\Q1) in online mode, +++ should not be used while the data transmission is paused with XOFF. Before entering the command mode with +++ the paused transmission should be resumed using the XON character.
- For compatibility reasons, the AT\Q command can be used in Multiplex mode, though the settings will not take effect. However, be aware that whenever you use the AT\Q write command in Multiplex mode and then save the current configuration to the user profile with AT&W, the changed AT\Q setting will become active after restart.

4.2 AT&C Set Data Carrier Detect (DCD) Line Mode

The AT&C command controls the behavior of the ME's DCD line.

Syntax

Exec Command
AT&C[<value>]
Response(s)
OK

PIN	ASC0	ASC1	MUX1	MUX2	MUX3		Last
-	+	-	±	±	±	-	-

Reference(s)
V.250

Parameter Description

<value>(num)(&W)(&V)	
[0]	DCD line shall always be on.
1(&F)	DCD line shall be on only when data carrier signal is present.
2	DCD line shall be on when one or more Internet services defined on the related serial channel are in state "Connecting" or "Up" as described below. For details on the various service states refer to AT^SISI, parameter <srvState> or AT^SISO, parameter <srvState>. • Transparent TCP service, SOCKET, HTTP, SMTP, POP3: DCD shall be on when <srvState>="Connnecting" or "Up" • FTP: DCD shall be on when data channel is connected, i.e. <srvState>="Up"

4.3 AT&D Set Data Terminal Ready (DTR) Line Mode

AT&D determines how the ME responds if the DTR line is changed from ON to OFF state during data connection (CSD or PPP or active Internet service opened with AT^SIST).

Syntax

Exec Command
AT&D[<value>]
Response(s)
OK

PIN	ASC0	ASC1	MUX1	MUX2	MUX3		Last
-	+	±	±	±	±	-	-

Reference(s)
V.250

Parameter Description

<value>(num)(&W)(&V)	
[0]	ME ignores status of the DTR line.
1	ON->OFF on DTR: Change to command mode while retaining the data connection.
2(&F)	ON->OFF on DTR: Disconnect the data connection (only for CSD and PPP) and change to command mode. For internet service the behaviour is like AT&D1. During OFF state of the DTR line auto-answer is disabled.

4.4 AT&S Set Data Set Ready (DSR) Line Mode

AT&S determines how the ME sets the DSR line depending on its communication state.

Syntax

Exec Command
AT&S[<value>]
Response(s)
OK

PIN	ASC0	ASC1	MUX1	MUX2	MUX3		Last
-	+	-	±	±	±	-	-

Reference(s)
V.250

Parameter Description

<value>(num)(&W)(&V)	
[0](&F)	DSR line is always ON
1	ME in command mode: DSR is OFF. ME in data mode: DSR is ON.

4.5 ATE AT Command Echo

ATE controls if the BGS2-E echoes characters received from TE during AT command state.

Syntax

Exec Command

ATE[<value>]

Response(s)

OK

PIN	ASC0	ASC1	MUX1	MUX2	MUX3		Last
-	+	+	+	+	+	-	-

Reference(s)

V.250

Parameter Description

<value>(num)(&W)(&V)

[0]	Echo mode off
1(&F)	Echo mode on

4.6 AT+ILRR Bit Rate Reporting

AT+ILRR controls whether or not the intermediate result code "+ILRR" is transmitted from the BGS2-E to the TE when a connection is being set up. The result code indicates the current bit rate. It is issued before the final result code of the connection, e.g. CONNECT, is transmitted to the TE.

Syntax

Test Command

```
AT+ILRR=?
```

Response(s)

```
+ILRR: (list of supported <value>s)
OK
```

Read Command

```
AT+ILRR?
```

Response(s)

```
+ILRR: <value>
OK
```

Write Command

```
AT+ILRR=<value>
```

Response(s)

```
OK
ERROR
+CME ERROR: <err>
```

PIN	ASC0	ASC1	MUX1	MUX2	MUX3		Last
+	+	-	+	-	-	-	-

Reference(s)

V.250

Intermediate Result Code

+ILRR: <rate>

Indicates current bit rate setting upon connection setup.

Parameter Description

<value>(num)(&W)(&V)	
0(&F)	Disables bit rate reporting.
1	Enables bit rate reporting.

<rate>(num)	
Bit rate setting upon connection setup (bps)	
0	Autobauding (see Section 4.7.1, Autobauding). Not supported on ASC1.
300	
600	
1200	
2400	
4800	
9600	
14400	

19200
28800
38400
57600
115200
230400

4.7 AT+IPR Bit Rate

AT+IPR allows to query and set the bit rate of the BGS2-E's asynchronous serial interfaces (UART).
The test command returns the values of supported automatically detectable bit rates and the values of the supported fixed bit rates.
The read command returns the current bit rate of the interface.
The write command specifies the bit rate to be used for the interface. Delivery bit rate value (<rate>) is Autobaud mode enabled (AT+IPR=0) on ASC0 and 57600bps on ASC1. This setting will not be restored with AT&F.

If using a fixed bit rate, make sure that both BGS2-E and TE are configured to the same rate. A selected bit rate takes effect after the write command returns OK and is stored in non-volatile memory. It is not recommended to set bit rates lower than 9600 bps in order to avoid timing problems (see Section 1.5, Communication between Customer Application and BGS2-E for details about timing).
In case of Autobaud mode (AT+IPR=0) the detected TE bit rate will not be saved and, therefore, needs to be resynchronized after any restart of the ME (for details refer Section 4.7.1, Autobauding). If Autobaud mode is activated, the ME will automatically recognize bit rate currently used by the TE.
In Multiplex mode the write command will not change the bit rate currently used, but the new bit rate will be stored and becomes active, when the ME is restarted.
The current setting of AT+IPR will be preserved when you download firmware (i.e. a firmware update does not restore the factory setting) or in the event of power failure.

Syntax

Test Command

```
AT+IPR=?
```

Response(s)

```
+IPR: (list of supported auto-detectable <rate>s) , (list of supported fixed-only <rate>s)
OK
```

Read Command

```
AT+IPR?
```

Response(s)

```
+IPR: <rate>
OK
```

Write Command

```
AT+IPR=<rate>
```

Response(s)

```
OK
ERROR
+CME ERROR: <err>
```

PIN	ASC0	ASC1	MUX1	MUX2	MUX3		Last
-	+	±	±	±	±	-	-

Reference(s)

V.250

Parameter Description

<rate>(num)(&V)

bit rate per second (bps)

0	Activates Autobaud mode. Not supported on ASC1. See Section 4.7.1, Autobauding for further details.
300	
600	
1200	

2400
4800
9600
14400
19200
28800
38400
57600
115200
230400

Note

- Generally, AT+IPR should be used as a standalone command as specified in Section 1.4.2, Concatenating AT Commands. If nevertheless combinations with other commands on the same command line cannot be avoided, there are several constraints to be considered:
  - Avoid combinations with the AT commands listed in Section 1.4.2, Concatenating AT Commands.
  - Keep in mind that there shall be a minimum pause between two AT commands as specified in Section 1.5, Communication between Customer Application and BGS2-E.
  - If AT+IPR=0 is entered, Autobaud mode will be activated after the response to the last command is received.
  - If local echo is active (ATE1) and AT+IPR=x is entered with other commands you may encounter the following problem: If switching to the new bit rate takes effect while a response is being transmitted, the last bytes may be sent with the new bit rate and thus, not properly transmitted. The following commands will be correctly sent at the new bit rate.

4.7.1 Autobauding

To take advantage of Autobaud mode specific attention must be paid to the following requirements:

- Synchronization between TE and ME:
  Ensure that TE and ME are correctly synchronized and the bit rate used by the TE is detected by the ME. To allow the bit rate to be synchronized simply use an "AT" or "at" string. This is necessary
  - after you have activated Autobaud mode
  - when you start up the ME while Autobaud mode is enabled. It is recommended to wait 3 to 5 seconds before sending the first AT character. Otherwise undefined characters might be returned.

  If you want to use Autobaud mode and auto-answer at the same time, you can easily enable the TE-ME synchronization, when you activate Autobaud mode first and then configure the auto-answer mode (ATS0 ≠ 0).
- Restrictions on Autobaud mode operation:
  - The serial interface shall be used with 8 data bits, no parity and 1 stop bit (factory setting), e.g. 2 stop bits are not supported for Autobaud mode.
  - A/ cannot be used.
  - Only the strings "AT" or "at" can be detected (neither "At" nor "aT").
  - The second serial interface ASC1 does not support Autobaud mode.
  - URCs that may be issued before the ME detects a new bit rate (by receiving the first AT character) will be sent at the previously detected bit rate or, after ME restart, at 57600 bps.
  - It is not recommended to switch to Autobaud mode from a bit rate that cannot be detected by the Autobaud mode mechanism (e.g. 300 bps). Responses to AT+IPR=0 and any commands on the same line might be corrupted.
- Autobaud mode and bit rate after restart:
  Unless the bit rate is determined, the following constraints apply:

- An incoming CSD call or a network initiated GPRS request cannot be accepted. This must be taken into account when Autobaud mode and auto-answer mode (ATS0 ≠ 0) are enabled at the same time, escpecially if SIM PIN 1 authentication is done automatically and the setting ATS0 ≠ 0 is stored to the user profile with AT&W.
- Until the bit rate is found, URCs generated after restart will be output at 57600 bps. This applies only to user defined URCs, such as "+CREG", "CCWA", "^SCKS" etc. The URCs "^SYSSTART" and "^SYSSTART ALARM MODE" will not be indicated when Autobaud mode is enabled.

Note: To avoid any problems caused by undetermined bit rates in the direction from ME to TE we strongly recommend to configure a fixed bit rate rather than Autobaud mode.

- Autobaud mode and Multiplex mode:
  If Autobaud mode is active you cannot switch to Multiplex mode (see AT+CMUX).

4.8 AT+CMUX Multiplex mode

Multiplex mode according to GSM 07.10 and 3G TS 27.010 ([5]) enables the use of virtual channels set up over one single serial interface. Every channel is used as an independent serial link. This way, up to three simultaneous AT command sessions can be handled at a time. For example, the first channel can be used to send or receive data, while two channels are available to control the module with AT commands or to establish a dedicated channel to receive Unsolicited Result Codes (URC), e.g. "+CIEV:" or "RING".

BGS2-E incorporates an internal multiplexer and thus integrates all the functions needed to implement full-featured multiplex solutions. For the application on top, customers have the flexibility to create their own multiplex programs conforming to the multiplexer protocol. To help system integrators save the time and expense of designing multiplexer applications, Cinterion Wireless Modules GmbH offers WinMUX, a ready-to-use multiplex driver for Windows XP, Windows Vista and Windows 7. Another approach is to develop customized solutions based on the sources of the WinMUX driver.
Refer to [4] which provides a detailed description of the multiplex architecture and step-by-step instructions of how to install and configure the Multiplex mode. The WinMUX driver and its source files can be supplied on request. Please contact your local distributor to obtain the latest installation software and user's guide.

All information provided in this section applies only to the ASC0 interface. The second interface ASC1 does not support Multiplex mode and is not accessible when the multiplexer is started on ASC0. See also Section 1.9, Auxiliary Serial Interface for details on ASC1.
AT+CMUX write command is used to enter Multiplex mode. Setup of the logical channels is initiated by the TE, i.e. the TE acts as initiator. This means that the TE shall ensure that logical channels are established before any further actions on the channels can be started. There is a timeout of five seconds, if the multiplexer protocol is enabled but no multiplexer control channel is established. Afterwards BGS2-E returns to AT command mode.
The parameter maximum frame size (N1) according to GSM 07.10 is implemented as 98 bytes by default. All other parameters are not available. Refer to [4] for further details regarding frame size.

Syntax

Test Command

```
AT+CMUX=?
```

Response(s)

```
+CMUX: (list of supported<mode>s)
OK
```

Read Command

```
AT+CMUX?
```

Response(s)

```
+CMUX: <mode>
OK
ERROR
+CME ERROR: <err>
```

Write Command

```
AT+CMUX=<mode>
```

Response(s)

```
OK
ERROR
+CME ERROR: <err>
```

PIN	ASC0	ASC1	MUX1	MUX2	MUX3		Last
-	+	-	-	-	-	-	+

Reference(s)

GSM 07.07, GSM 07.10,
3GPP TS 27.010

Parameter Description

<mode>(num)	
Enable Multiplex mode.	
0	Basic option

4.8.1 Restrictions on Multiplex mode

In Multiplex mode, data and fax calls can only be set up on logical channel 1. Due to this restriction, AT commands have a different behavior on channels 2+3 compared to channel 1. Several commands are not available, others return different responses. This section summarizes the concerned commands. For general rules and restrictions to be considered in Multiplex mode please refer to [4].

Table 4.1: Availability of AT Commands on Virtual Channels

Command	Behavior on channel 1	Behavior on channel 2+3
+++	not usable, but see note 1)	not usable, but see note 1)
AT+CBST	as described	not usable
AT+CRLP	as described	not usable
AT+CG... (GPRS commands)	as described	see note 2)
AT+F... (Fax commands)	as described	not usable
AT&C	as described	not usable
AT&D	as described	not usable
AT&S	as described	not usable
ATA	as described	no Data Calls
ATD	as described	no Data Calls
ATDI	as described	not usable
ATO	as described	not usable
ATS10	as described	not usable
ATS18	as described	not usable

1) The applicability of the +++ escape sequence depends on the customer's external application based on the Mulitplexer Protocol. Recommendations for implementing an appropriate modem status command (MSC) are provided in [4], Section "Escape Sequence".

2) PDP contexts can be defined on any channel, but are visible and usable only on the channel on which they are defined (thus it is not possible to define a context on channel 2 and activate it on channel 3). GPRS connections can be established on two channels at a time.

Table 4.2: Summary of AT commands with Different Behavior in Multiplex mode

Command	Description
AT\Q	It is recommended to use hardware flow control (AT\Q3). XON/XOFF flow control (AT\Q1) is not supported in Multiplex mode. See note regarding AT\Qn settings stored with AT&W if Multiplex mode is active.
AT&V	Different default configurations on channels 1, 2 and 3.
AT&W	Different user profiles can be stored on each channel.

Command	Description
AT+IPR	Before starting Multiplex mode, ensure that the bit rate set with AT+IPR is not lower than 57600 bps. For using data services in Multiplex mode it is recommended to set at least 115200 bps. In Multiplex mode, the write command AT+IPR=<rate> will not change the bit rate currently used, but the new bit rate will be stored and becomes active, when the module is restarted.
AT+IPR=0	Multiplex mode cannot be activated while Autobaud mode is enabled.
AT+CALA	An alarm set on one of the interfaces overwrites the the alarm setting on all remaining interfaces. When the alarm is timed out and executed the ME sends the URC only on the channel where the most recent alarm setting was made. The alarm time will be reset to "00/01/01,00:00:00" on all channels.
AT+CMEE	Presentation mode can be separately configured for each channel.
AT+CNMA	If Multiplex mode is activated the +CNMI parameter will be set to zero on all channels, if one channel fails to acknowledge an incoming message within the required time.
AT+CNMI	Phase 2+ parameters can only be used on one channel. The parameter for <mt> and <ds> on the other channels have to be set to zero. If either a SM or a Status Report is not acknowledged, all +CNMI parameter will be set to zero on all channels.
AT+CFUN	If the ME is in Multiplex mode, it is not recommended to activate SLEEP mode with AT+CFUN=<fun>. The best approach to properly control SLEEP mode in this case is to issue the PSC messages described in [4], Section "Power saving control (PSC)".
AT+CPMS	Parameter <mem3> will be the same on all instances, but the settings of <mem1> and <mem2> may vary on each instance.
AT^SSDA	If one instance is set to <da>=1 and <mt>=1, then all other instances must be configured for <mt>=0.

5. Security Commands

The AT Commands described in this chapter allow the external application to determine various security related settings.

5.1 AT+CPIN PIN Authentication

The AT+CPIN write command can be used to enter one of the passwords listed below. The read command can be used to check whether or not the ME is waiting for a password, or which type of password is required.

This may be for example the SIM PIN1 to register to the GSM network, or the SIM PUK1 to replace a disabled SIM PIN1 with a new one, or the PH-SIM PIN if the client has taken precautions for preventing damage in the event of loss or theft etc. If requested by the ME AT+CPIN may also be used for the SIM PIN2 or SIM PUK2.

If no PIN1 request is pending (for example if PIN1 authentication has been done and the same PIN1 is entered again) BGS2-E responds "+CME ERROR: operation not allowed"; no further action is required.

Each time a password is entered with AT+CPIN the module starts reading data from the SIM. The duration of reading varies with the SIM card. This may cause a delay of several seconds before all commands which need access to SIM data are effective. See Section 21.1, Restricted access to SIM data after SIM PIN authentication for further detail.

Syntax

Test Command

```
AT+CPIN=?
```

Response(s)

```
OK
```

Read Command

```
AT+CPIN?
```

Response(s)

```
+CPIN: <code>
OK
ERROR
+CME ERROR: <err>
```

Write Command

```
AT+CPIN=<pin>[, <new pin>]
```

Response(s)

```
OK
ERROR
+CME ERROR: <err>
```

PIN	ASC0	ASC1	MUX1	MUX2	MUX3		Last
-	+	+	+	+	+	-	-

Reference(s)

GSM 07.07

Parameter Description

`<pin>`(str)

Password (string type), usually SIM PIN1.
If the requested password was a PUK, such as SIM PUK1 or PH-FSIM PUK or another password, then `<pin>` must be followed by `<new pin>`.

`<new pin>`(text)

If the requested code was a PUK: specify a new password or restore the former disabled password. See Section 5.1.1, What to do if PIN or password authentication fails? for more information about when you may need to enter the PUK.

`<code>`(text)

SIM PIN authentication	
READY	PIN has already been entered. No further entry needed.
SIM PIN	ME is waiting for SIM PIN1.
SIM PUK	ME is waiting for SIM PUK1 if PIN1 was disabled after three failed attempts to enter PIN1.
SIM PIN2	ME is waiting for PIN2. This is only applicable when an attempt to access a PIN2 related feature was acknowledged with +CME ERROR: 17 ("SIM PIN2 required"), for example when the client attempts to edit the FD phonebook). In this case the read command `AT+CPIN`? also prompts for SIM PIN2. Normally, the `AT+CPIN2` command is intended for SIM PIN2.
SIM PUK2	ME is waiting for PUK2 to unblock a disabled PIN2. As above, this is only necessary when the preceding command was acknowledged with +CME ERROR: 18 ("SIM PUK2 required") and only if the read command `AT+CPIN`? also prompts for SIM PUK2. Normally, the `AT+CPIN2` command is intended for SIM PUK2.
Phone security locks set by client or factory	
PH-SIM PIN	ME is waiting for phone-to-SIM card password if "PS" lock is active and the client inserts other SIM card than the one used for the lock. ("PS" lock is also referred to as phone or antitheft lock).
PH-SIM PUK	ME is waiting for Master Phone Code, if the above "PS" lock password was incorrectly entered three times.
PH-FSIM PIN	ME is waiting for phone-to-very-first-SIM card. Necessary when "PF" lock was set. When powered up the first time, ME locks itself to the first SIM card put into the card holder. As a result, operation of the mobile is restricted to this one SIM card (unless the PH-FSIM PUK is used as described below).
PH-FSIM PUK	ME is waiting for phone-to-very-first-SIM card unblocking password to be given. Necessary when "PF" lock is active and other than first SIM card is inserted.
PH-NET PUK	ME is waiting for network personalisation unblocking password
PH-NS PIN	ME is waiting for network subset personalisation password
PH-NS PUK	ME is waiting for network subset unblocking password
PH-SP PIN	ME is waiting for service provider personalisation password
PH-SP PUK	ME is waiting for service provider personalisation unblocking password
PH-C PIN	ME is waiting for corporate personalisation password
PH-C PUK	ME is waiting for corprorate personalisation un-blocking password

Notes

- Successful PIN authentication only confirms that the entered PIN was recognized and correct. The output of the result code OK does not necessarily imply that the mobile is registered to the desired network.
  Typical example: PIN was entered and accepted with OK, but the ME fails to register to the network. This may be due to missing network coverage, denied network access with currently used SIM card, no valid roaming agreement between home network and currently available operators etc.
  BGS2-E offers various options to verify the present status of network registration: For example, the AT+COPS command indicates the currently used network. With AT+CREG you can also check the current status and activate an unsolicited result code which appears whenever the status of the network registration changes (e.g. when the ME is powered up, or when the network cell changes).
- <pin> and <new pin> can also be entered in quotation marks (e.g. "1234").
- To check the number of remaining attempts to enter the passwords use the AT^SPIC command.
- See AT+CPWD and AT^SPWD for information on passwords.
- See AT+CLCK and AT^SLCK for information on lock types.

5.1.1 What to do if PIN or password authentication fails?

PIN1 / PUK1:
After three failures to enter PIN 1, the SIM card is blocked (except for emergency calls). +CME ERROR: 12 will prompt the client to unblock the SIM card by entering the associated PUK (= PIN Unblocking Key / Personal Unblocking Key). After ten failed attempts to enter the PUK, the SIM card will be invalidated and no longer operable. In such a case, the card needs to be replaced. PIN1 consists of 4 to 8 digits, PUK1 is an 8-digit code only.
To unblock a disabled PIN1 you have two options:

- You can enter AT+CPIN=PUK1,new PIN1.
- You can use the ATD command followed by the GSM code **05*PUK*newPIN*newPIN#;.

PIN2 / PUK2:
PIN2 prevents unauthorized access to the features listed in AT+CPIN2. The handling of PIN2 varies with the provider. PIN2 may either be a specific code supplied along with an associated PUK2, or a default code such as 0000. In either case, the client is advised to replace it with an individual code. Incorrect input of PUK2 will permanently block the additional features subject to PIN2 authentification, but usually has no effect on PIN1. PIN2 consists of 4 digits, PUK2 is an 8-digit code only.
To unblock a disabled PIN2 you have two options:

- You can enter AT+CPIN2=PUK2,new PIN2.
- You can use the ATD command followed by the GSM code **052*PUK2*newPIN2*newPIN2#;.

Phone lock:
If the mobile was locked to a specific SIM card (= "PS" lock or phone lock), the PUK that came with the SIM card cannot be used to remove the lock. After three failed attempts to enter the correct password, ME returns +CPIN: PH-SIM PUK (= response to read command AT+CPIN?), i.e. it is now waiting for the Master Phone Code. This is an 8-digit device code associated to the IMEI number of the mobile which can only by obtained from the manufacturer or provider. When needed, contact Cinterion Wireless Modules GmbH and request the Master Phone Code of the specific module.
There are two ways to enter the Master Phone code:

- You can enter AT+CPIN=Master Phone Code
- You can use the ATD command followed by the GSM code *#0003*Master Phone Code#;.

Usually, the Master Phone Code will be supplied by mail or e-mail. If the received number is enclosed in the *# codes typically used for the ATD option, it is important to crop the preceding *#0003* characters and the appended #.
Example: You may be given the string *#0003*12345678#. When prompted for the PH-SIM PUK simply enter 12345678.
If incorrectly input, the Master Phone Code is governed by a specific timing algorithm: (n-1)*256 seconds (see table below). The timing should be considered by system integrators when designing an individual MMI.

Number of failed attempts	Time to wait before next input is allowed
1st failed attempt	No time to wait
2nd failed attempt	4 seconds
3rd failed attempt	3 * 256 seconds
4th failed attempt	4 * 256 seconds
5th failed attempt	5 * 256 seconds
6th failed attempt and so forth	6 * 256 seconds and so forth

SIM locks:
These are factory set locks, such as "PF", "PN", "PU", "PP", "PC". An 8-digit unlocking code is required to operate the mobile with a different SIM card, or to lift the lock. The code can only be obtained from the provider.
Failure to enter the password is subject to the same timing algorithm as the Master Phone Code (see Table above).

Call barring:
Supported modes are "AO", "OI", "OX", "AI", "IR", "AB", "AG", "AC". If the call barring password is entered incorrectly three times, the client will need to contact the service provider to obtain a new one.

Related sections:
"+CME ERROR: <err>" values are specified at Section 2.11.1, CME/CMS Error Code Overview. For further instructions and examples see AT+CLCK, AT^SLCK, AT+CPWD and AT^SPWD.
For a complete list of Star-Hash codes please refer Section 21.2, Star-Hash (*#) Network Commands.

5.2 AT+CPIN2 PIN2 Authentication

AT+CPIN2 controls network authentication of the BGS2-E.
The read command returns an alphanumeric string indicating whether or not network authentication is required.
The write command allows the BGS2-E to store the entered password. This may be for example the SIM PIN2 to benefit from the features listed below, or the SIM PUK2 to replace a disabled PIN2 with a new one. Note that PIN2 can only be entered if PIN1 authentication was done.
If the BGS2-E is requesting SIM PUK2, use <pin> to enter the PUK2, followed by <new pin> to specify the new PIN2.

Syntax

Test Command

```
AT+CPIN2=?
```

Response(s)

```
OK
```

Read Command

```
AT+CPIN2?
```

Response(s)

```
+CPIN2: <code>
OK
ERROR
+CME ERROR: <err>
```

Write Command

```
AT+CPIN2=<pin>[, <new pin>]
```

Response(s)

```
OK
ERROR
+CME ERROR: <err>
```

PIN	ASC0	ASC1	MUX1	MUX2	MUX3	Last
+	+	+	+	+	+	-	-

Reference(s)

GSM 07.07

Parameter Description

<pin>(str)

Password (string type), usually SIM PIN2 or, if requested, SIM PUK2.

<new pin>(str)

If the requested code was SIM PUK2: new password (PIN2).
See Section 5.1.1, What to do if PIN or password authentication fails? for more information about when you may need to enter the PUK.

<code>(text)

READY	ME is not pending for any password.
SIM PIN2	ME is waiting for SIM PIN2. This <code> is returned only when PIN2 authentication has not yet been done or has failed ("+CME ERROR: 17").
SIM PUK2	ME is waiting for SIM PUK2. This <code> is returned only when PIN2 authentication has failed and ME is pending for SIM PUK2 (i.e. "+CME ERROR: 18").

Note

- Functions accessible only after PIN2 authentication:
  AT+CACM: Accumulated call meter (ACM) reset or query
  AT+CAMM: Accumulated call meter maximum (ACMmax) set or query
  AT+CLCK: Facility lock to "FD" (Fixed dialing phonebook)
  AT^SLCK: Facility lock to "FD" (Fixed dialing phonebook)
  AT+CPWD: Change "P2"password
  AT^SPWD: Change "P2"password
  AT+CPUC: Price per unit and currency table
  AT+CPIN2: Enter SIM PIN2 or SIM PUK2 if requested.

  For example, SIM PIN2 will be needed when you attempt to edit the "FD" phonebook and ME returns "+CME ERROR: 17" or "+CPIN: SIM PIN2".
  Once the required <pin> has been entered correctly, PIN2 authentication code changes to READY. After 300s, a repetition of the authentication process is required (PIN2 authentication code changes from READY to SIM PIN2).

Examples

EXAMPLE 1

Change PIN2

```
AT+CPWD="P2","0000","8888"                (where "0000" = old PIN2 and "8888" = new PIN2)
OK
```

EXAMPLE 2

Unblock a disabled PIN2

```
AT+CPIN2?
+CPIN2: SIM PUK2                          PIN2 has been disabled, PUK2 must be entered
OK                                        to define a new PIN2
AT+CPIN2=12345678,8888                    where "12345678" is the PUK2, and "8888" the new
                                          PIN2.
```

EXAMPLE 3

Write into "FD" phonebook

```
AT+CPBS="FD"
OK
AT+CPBW=2,"+493012345678",145,"Charly"
+CME ERROR: 17                            access denied due to missing PIN2 authentication
AT+CPIN2=8888
OK
AT+CPBW=2,"+493012345678",145,"Charly"
OK
```

5.3 AT^SPIC Display PIN counter

The AT^SPIC command can be used to find out whether the ME is waiting for a password and, if so, how many attempts are left to enter the password.

The execute command returns the number of attempts still available for entering the currently required password, for example the PIN, PUK, PH-SIM PUK etc.

The read command AT^SPIC? indicates which password the number of attempts stated by the execute command actually refers to. Also, the write command may be used to query the counter for a specific password: It indicates the number of attempts still available for entering the password identified by <facility>, for example the PIN, PIN2, PH-SIM PIN etc.

To check whether or not you need to enter a password use the read commands AT+CPIN?, AT+CPIN2? and AT^SPIC?. If the response to AT+CPIN? is "READY" the counter of the execute command AT^SPIC relates to PIN2. See last example. If the responses to AT+CPIN? and AT+CPIN2? both read "READY", no password is currently required, and the referrer of the execute command AT^SPIC is explicitly undefined.

Syntax

Test Command

```
AT^SPIC=?
```

Response(s)

```
OK
```

Read Command

```
AT^SPIC?
```

Response(s)

```
^SPIC: <code>
OK
```

Exec Command

```
AT^SPIC
```

Response(s)

```
^SPIC: <counter>
OK
```

Write Command

```
AT^SPIC=<facility>
```

Response(s)

```
^SPIC: <counter>
OK
ERROR
+CME ERROR: <err>
```

PIN	ASC0	ASC1	MUX1	MUX2	MUX3		Last
-	+	+	+	+	+	-	-

Parameter Description

<counter>(num)

Number of attempts left to enter the currently required password. This number will be counted down after each failure.

<facility>(str)	
Password for which the corresponding PIN counter is to be displayed.	
“SC“	SIM PIN or SIM PUK. If the SIM PIN has been deactivated after three failed attempts, the counter for SIM PUK will be returned instead.
“PS“	"Phone code" or "device code" (cf. AT+CLCK and AT+CPWD). If incorrectly entered three times, the Master Phone Code is required to lift the lock and the number of remaining attempts for the master phonecode will be returned.
“P2“	SIM PIN2 or SIM PUK2. If the SIM PIN2 has been deactivated after three failed attempts, the counter for SIM PUK2 will be returned instead.
“PN“	Network Personalisation

<code>(text)	
Identification of the currently required password.	
SIM PIN	ME is waiting for SIM PIN1.
SIM PUK	ME is waiting for SIM PUK1 if PIN1 was disabled after three failed attempts to enter PIN1.
SIM PIN2	ME is waiting for PIN2, when the attempt to access PIN2 requiring features was acknowledged with "+CME ERROR: 17" (e.g. if the user attempts to edit the FD phonebook).
SIM PUK2	ME is waiting for PUK2 to unblock a disabled PIN2. Necessary if preceding command was acknowledged with "+CME ERROR: 18".
PH-SIM PIN	ME is waiting for phone-to-SIM card password if "PS" lock is active and user inserts other SIM card than the one used for the lock. ("PS" lock is also referred to as phone or antitheft lock).
PH-SIM PUK	ME is waiting for Master Phone Code, if the above "PS" lock password was incorrectly entered three times.
PH-NET PUK	ME is waiting for network personalisation unblocking password

Notes

- Whenever the required password changes, <counter> changes to reflect that change. Please refer to the examples below.
- For passwords associated to the phone lock ("PS" lock set by user or factory) or other factory set locks, such as "PF", "PN", "PU", "PP", "PC" the number of attempts is subject to a timing algorithm explained in AT+CPIN. If these passwords are incorrectly entered the counter first returns 3, 2 and 1 remaining attempt(s), but then gives the total number of attempts which amounts to 63 (see example below).
- See also Chapters AT+CLCK, AT+CPIN, AT+CPIN2, AT+CPWD, AT^SLCK for further information on locks and passwords.

Examples

EXAMPLE 1

The user fails to provide a correct SIM PIN three times. The counter decreases each time. After the counter reaches zero, the SIM PUK is required. After each failure to enter a correct SIM PUK, the counter decreases.

```
at+cpin?
+CPIN: SIM PIN
OK                                          Currently required password is PIN1.
at^spic
^SPIC: 3
OK                                          3 attempts left.
at+cpin=9999
+CME ERROR: incorrect password
```

```
at^spic
^SPIC: 2                                  2 attempts left.
OK
at+cpin=9999
+CME ERROR: incorrect password
OK
at^spic
^SPIC: 1                                  1 attempt left.
OK
at+cpin=9999
+CME ERROR: incorrect password
at+cpin?
+CPIN: SIM PUK
OK                                        Now required password is PUK 1.
at^spic
^SPIC: 10
OK                                        10 attempts left for PUK 1.
at+cpin=01234567,1234
+CME ERROR: incorrect password
at^spic
^SPIC: 9
OK                                        9 attempts left for PUK 1.
```

EXAMPLE 2

Though a mobile is locked to a specific SIM card (phone lock), the user attempts to operate it with another SIM card. The user correctly enters the SIM PIN of the SIM card currently inserted, but then fails to give the "PS" lock password (PH-SIM PUK):

```
at+cpin=9999
OK
at+cpin?
+CPIN: PH-SIM PIN                         ME is waiting for the phone lock password.
OK
at^spic
^SPIC: 3                                  3 attempts left.
OK
at+cpin=4711
+CME ERROR: incorrect password
at^spic?
^SPIC: 2                                  2 attempts left.
OK
at+cpin=4712
+CME ERROR: incorrect password
at^spic
^SPIC: 1                                  1 attempt left.
OK
at^spic?
^SPIC: PH-SIM PIN                         Displayed counter refers to phone lock password.
OK

at+cpin=4713
+CME ERROR: incorrect password
at^spic
^SPIC: 63
OK
at^spic?
^SPIC: PH-SIM PUK                         Displayed counter refers to master phone code.
OK
```

```
at+cpin=4714
+CME ERROR: incorrect password
at^spic
^SPIC: 63
OK
```

EXAMPLE 3

This example shows that after successful SIM PIN1 authentication the counter of the AT^SPIC execute and read command refers to SIM PIN2, i.e. it does not reflect the status of SIM PIN1. This may be a problem if the user enters a wrong PIN1 and is not aware that the number of attempts left to enter SIM PIN1 is counted down.

```
+CREG: 0
at+cpin=1234
OK
+CREG: 2

+CREG: 1                                  The mobile ist properly registered to the network.
at+cpin?
+CPIN: READY                              The AT+CPIN? read command confirms that SIM
                                          PIN1 authentication was successful.
at^spic
^SPIC: 3                                  As SIM PIN1 authentication was successful, the
                                          counter relates to SIM PIN2 and correctly indicates
                                          that the user has 3 attempts to enter SIM PIN2.
OK
AT^SPIC?                                  Likewise, the read command notifies that the ME is
                                          waiting for SIM PIN2.
^SPIC: SIM PIN2
OK
at+clck="SC",0,456789                     First attempt to enter a wrong SIM PIN1.
+CME ERROR: incorrect password
at^spic
^SPIC: 3                                  SIM PIN1 authentication is still valid, and the counter
                                          relates to SIM PIN2.
at+clck="SC",0,456789                     Second attempt to enter a wrong SIM PIN1.
+CME ERROR: incorrect password
at^spic
^SPIC: 3                                  SIM PIN1 authentication is still valid, and the counter
                                          relates to SIM PIN2.
at+clck="SC",0,456789                     Third attempt to enter a wrong SIM PIN1.
+CME ERROR: incorrect password

+CREG: 0                                  SIM PIN1 authentication is no longer valid.
at^spic
^SPIC: 10                                 This time, after the SIM PIN1 code has been dis-
                                          abled, the counter indicates the status of SIM PIN1
                                          and notifies that 10 attempts are left to enter the SIM
                                          PUK.
```

To avoid conflicts we recommend to use the AT^SPIC read and write commands rather than the execute command only. The read command clearly states the currently required password, and the write command may be used to get the counter for a specific <facility>, in this case for example "P2".

5.4 AT+CLCK Facility lock

AT+CLCK can be used to lock, unlock or interrogate a network or ME <facility>. The command can be aborted when network facilities are being set or interrogated.

Syntax

Test Command

AT+CLCK=?

Response(s)

+CLCK: list of supported <facility>s
OK

Write Command

AT+CLCK=<facility>, <mode>[, <password>][, <class>]

Response(s)

if <mode> is not equal 2 and command successful:
OK
if <mode>= 2 and command successful:
+CLCK: <status>[, <class>]
[+CLCK: <status>[, <class>]]
[+CLCK: ...]
OK
ERROR
+CME ERROR: <err>

PIN	ASC0	ASC1	MUX1	MUX2	MUX3		Last
+	+	+	+	+	+	-	-

Reference(s)

GSM 07.07, GSM 02.04,
GSM 02.88, GSM 03.88, GSM 04.88

Parameter Description

<facility>(str)

Phone security locks set by client or factory

Primarily intended for the client to take safety precautions, "SC", "PS" and "FD" can be configured individually. "PS" may also be factory set.
Parameter <class> is not applicable to security locks.
See examples below for further details.

“SC“	SIM (lock SIM cards) SIM requests password upon ME power-up and when this lock command is issued. <password>: SIM PIN1.
“PS“	Phone locked to SIM card ME requests password when other than current SIM card is inserted. "PS" lock is frequently referred to as "phone lock", or "device lock". Accordingly, the password may be called "phone code" or "device code". The "PS" password is not associated with the PUK of the SIM card. If incorrectly entered three times, the Master Phone Code is required to lift the lock. This is an 8-digit device code associated to the IMEI number of the mobile which can only be obtained from the manufacturer of the module. Once the Master Phone Code has been acctepted, the mobile is operational, and the "PS" lock is no longer active. If needed it must be set once again.

<password>: User defined password. It is needed before the first use of <facility> "PS" and, therefore, must first be specified with AT+CPWD or AT^SPWD, if it has not been predefined by factory settings. If set by factory (e.g. for a prepaid mobile), the password is supplied by the provider or operator.

“FD“	SIM Fixed Dialing lock If "FD" lock is enabled numbers MMI *# codes can be used only if they start with matching numbers or characters stored in the "FD" phonebook. The capacity of the "FD" phonebook is depending on the SIM card. Numbers stored to the "FD" phonebook must not contain the call modifiers "I","i","*31#", "#31#". <password>: SIM PIN 2. Any attempt to dial a string not specified in the "FD" phonebook will be denied, causing an error result code. The type of result code varies depending on the type of service: "+CME ERROR: call barred" for voice calls, GPRS connections and *# codes for Supplementary Services. "NO CARRIER" for fax calls and circuit switched data calls. "+CMS ERROR: operation not allowed" for SMS. If "FD" lock is enabled the following applies: • Handling of Supplementary Services: The "FD" lock is effective only for AT+CCFC <mode> 3 (registering the CF destination number). All other Supplementary Services and functions provided by AT+CCFC are not restricted by the "FD" lock. • GPRS commands can be used only if the "FD" phonebook contains an entry with phone number "*99#". This single entry enables all GPRS commands, including AT commands and modem compatibility commands like "ATD*99***1#" or "ATD*98***1#". Indication is "+CME ERROR: call barred".

Factory defined SIM locks:

Typical examples of factory set SIM locks are prepaid phones or network locks, used to restrict the operation of a mobile to a specific provider or operator. The client should be aware that each of these lock types can only be unlocked if the associated password is available. For example, a mobile can be locked to accept only SIM cards from the respective provider, or even one single SIM card. Once a different SIM card is inserted the ME will prompt the client to enter a specific code. This is not the PUK of the SIM card, but usually an 8-digit code which needs to be requested from the provider.
The locks can only be set by the manufacturer and need to be agreed upon between the parties concerned, e.g. provider, operator, distributor etc. on the one side and the manufacturer on the other side. For details contact your local dealer or Cinterion Wireless Modules GmbH.
Parameter <class> is not applicable to SIM locks.
<password> and instructions for unlocking must be obtained from the network provider.

“PF“	Lock Phone to the very First SIM card
“PN“	Network Personalisation
“PU“	Network subset Personalisation
“PP“	Service Provider Personalisation
“PC“	Corporate Personalisation

Supplementary Service Call Barring:

Supplementary Service "Call Barring" allows to specify conditions under which calls will be disallowed by the network.
The availability of the Supplementary Services varies with the network. To benefit from call barring the client will need to subscribe them, though a limited number of call barring types may be included in the basic tariff package.
When you attempt to set a <facility> or <class> which is not provisioned, not yet subscribed to, or not supported by the module, the setting will not take effect regardless of the response returned. The responses in these cases vary with the network (for example "OK", "+CME ERROR: operation not allowed", "+CME ERROR: oper-

ation not supported" etc.). To make sure check the extended error response with AT+CEER and the lock status with <mode>=2.
<password>: Network password supplied from the provider or operator. Usually there is one password which applies to all call barring options. For details contact your provider.

“AO“	BAOC (Bar All Outgoing Calls)
“OI“	BOIC (Bar Outgoing International Calls)
“OX“	BOIC-exHC (Bar Outgoing International Calls except to Home Country)
“AI“	BAIC (Bar All Incoming Calls)
“IR“	BIC-Roam (Bar Incoming Calls when Roaming outside the home country)
“AB“	All Barring services (applicable only for <mode>=0)
“AG“	All outGoing barring services (applicable only for <mode>=0)
“AC“	All inComing barring services (applicable only for <mode>=0)

<mode>(num)

0	unlock
1	lock
2	query status

<status>(num)

0	lock is inactive
1	lock is active

<password>(str)

Password string used to lock and to unlock a <facility>. Length and authority for passwords depend on the <facility> in question and are therefore listed in the section on parameter <facility>. Passwords can be modified with AT+CPWD or AT^SPWD.

<class>(num)

Integer or sum of integers each representing a class of information, i.e. a bearer service, telecommunication service or bearer service group as defined in "GSM 02.04".

1	voice
2	class 2 ("data") comprises all those individual data classes between 16 and 128, that are supported both by the network and the MS. This means, a setting made for class 2 applies to all individual data classes (if supported). In addition, you can assign a different setting to a specific class. For example, you can activate Call Forwarding for all data classes, but deactivate it for data class 64, "dedicated packet access".
4	fax
8	SMS
16	data circuit sync
32	data circuit async
64	dedicated packet access
128	dedicated PAD access
1...[7]...255	combination of some of the above classes. For example, the default setting 7 represents the sum of the integers 1, 2 and 4 (voice, data and fax). The value 255 covers all classes. If parameter "class" is omitted, the default value 7 is used.

Notes

- The AT+CLCK command offers the full range of <class> parameters according to the GSM specifications. However, when you attempt to use a service option which is not provisioned or not yet subscribed to, the setting will not take effect regardless of the response returned.
  The responses in these cases vary with the network (for example "OK", "Operation not allowed", "Operation not supported" etc.). To make sure check the extended error response with AT+CEER and the lock status with <mode>=2.
- The command has been implemented with the full set of <class> parameters according to GSM 07.07. For actual applicability of a desired Call barring service to a specific service or service group (a specific <class> value) please consult table A.1 of GSM 02.04.
- If an outgoing Fax or Data Call is rejected due to an active "call barring" supplementary service, the call will be terminated with result code NO CARRIER.
  Under the same conditions, an outgoing Voice call will be terminated with result code NO DIALTONE.
- If an invalid <password> is entered several times in succession, a delay incremented after each failed attempt will increase the time to wait before the input of the <password> is accepted. To avoid blocking the serial interface the running AT+CLCK command is aborted after a short timeout and returns "+CME ERROR: unknown" (+CME ERROR: 100). If then the AT+CLCK command is issued once again execution is denied with "+CME ERROR: operation temporary not allowed" (+CME ERROR: 256). For details regarding the delay see Section 5.1.1, What to do if PIN or password authentication fails?.
- If the user tries to set a lock although it is already active or, the other way round, tries to unlock an inactive lock, the response will be OK, but the <password> will not be checked or verified.

Examples

EXAMPLE 1

Lock SIM card (<facility>= "SC")

`AT+CLCK="SC",1,"9999"`	The "SC" parameter enables or disables the SIM PIN authentication (PIN 1) when you power up the GSM engine
`OK`	SIM card locked. As a result, SIM PIN 1 must be entered to enable ME to register to the GSM network.

`AT+CLCK="SC",0,"9999"`	Unlocks SIM card.
`OK`	When powered up, ME registers to the GSM network without requesting SIM PIN1. Note: Depending on the services offered by the provider, this feature is not supported by all SIM card types. If so, the command returns ERROR when you attempt to unlock the card.

To query the status of the SIM card lock:

`AT+CLCK="SC",2`	Query the status of SIM card lock.
`+CLCK: 1`	SIM card is locked. SIM PIN1 must be entered to enable ME to register to the GSM network.
`OK`	

EXAMPLE 2

Phone lock (<facility>="PS")

AT+CPIN? OK	Make sure that PIN1 authentication is valid.

To lock the ME to the currently inserted SIM card, first specify a password for <facility> "PS":

AT+CPWD="PS",,"1234" OK	If "PS" lock has not been set before: enter new password.

Optionally, if "PS" password was defined before, change existing password:

AT+CPWD="PS","1234","3333" OK	To replace existing "PS" password: Enter old and new password.

Then, activate the Phone Lock:

AT+CLCK="PS",1,"3333" OK	Locks the mobile to the current SIM card.

To operate the mobile with the SIM card for which "PS" lock was activated:

AT+CPIN? +CPIN: SIM PIN OK AT+CPIN="9999" OK	No additional password is required for operation (SIM recognized by mobile).

To operate the mobile with other SIM card than the one used for the "PS" lock:
Enter SIM PIN of present card, followed by "PS" lock password.

AT+CPIN? +CPIN: SIM PIN OK AT+CPIN="1111" OK	PIN authentication accepted.
AT+CPIN? +CPIN: PH-SIM PIN OK AT+CPIN="3333" OK	"PS" lock password is required. "PS" Lock password has been accepted. ME is fully operational now.

To deactivate the Phone Lock:

AT+CLCK="PS",0,"3333" OK	Phone Lock password has to be provided again. Now the mobile can be used with any SIM card, without the need of the phone lock password.

5.5 AT^SLCK Facility lock

AT^SLCK provides the "Facility lock" function as defined for the GSM 07.07 command AT+CLCK. The command can be used to lock, unlock or interrogate a network or ME <facility>.
AT^SLCK is, in every respect, identical with AT+CLCK, except that the command syntax and response prefix is "^SLCK" instead of "+CLCK". For further details please refer to AT+CLCK.
The command can be aborted when network facilities are being set or interrogated.

Syntax

Test Command

AT^SLCK=?

Response(s)

^SLCK: list of supported <facility>s
OK

Write Command

AT^SLCK=<facility>, <mode>[, <password>][, <class>]

Response(s)

if <mode> is not equal 2 and command successful:
OK
if <mode>= 2 and command successful:
^SLCK: <status>, <class>
[^SLCK: <status>, <class>]
[^SLCK: ...]
OK
If error is related to ME functionality
ERROR
+CME ERROR: <err>

PIN	ASC0	ASC1	MUX1	MUX2	MUX3		Last
+	+	+	+	+	+	-	-

Reference(s)

GSM 07.07, GSM 02.04,
GSM 02.88, GSM 03.88, GSM 04.88

5.6 AT+CPWD Change Password

AT+CPWD allows to define a new password for a password protected <facility> lock function. Each password is a string of digits, the length of which varies with the associated <facility>. The test command returns a list of pairs which represent the available facilities and the maximum length of the associated password. See AT commands AT+CLCK and AT^SLCK for more information on the various lock features.

Specifically the command can be used to

- change PIN1 or PIN2,
- change the password supplied from your provider for the "call barring" supplementary service,
- set individual phone security passwords,
- enter the unblocking key (Master Phone Code) to restore a disabled "PS" password.

To delete a password use the following syntax: at+cpwd=<facility>,<old password>

Syntax

Test Command

AT+CPWD=?

Response(s)

+CPWD: list of supported (<facility>, <password length>)
OK

Write Command

AT+CPWD=<facility>, <old password>[, <new password>]

Response(s)

New password has been registered for the facility lock function.
OK
If parameter <old password> was not correct:
+CME ERROR: 16 (+CME ERROR: incorrect password)
If the password for the selected <facility> has been invalidated due to too many failed attempts:
+CME ERROR: ...
If error is related to ME functionality:
+CME ERROR: <err>

PIN	ASC0	ASC1	MUX1	MUX2	MUX3		Last
+	+	+	+	+	+	-	-

Reference(s)

GSM 07.07

Parameter Description

<facility>(str)

Phone security locks set by client or factory:

Primarily intended for the client to take safety precautions, passwords "SC" (SIM PIN) and "P2" (SIM PIN2) are usually predefined, but can be configured individually. The password for lock facility "PS" may also be factory set.

“SC“	SIM PIN. SIM requests password upon ME power-up and when this lock command is issued. If incorrectly entered three times, the SIM PUK is required to perform authentication. Input of the SIM PUK password is possible only with AT command AT+CPIN or ATD. For further details please refer to Section 5.1.1, What to do if PIN or password authentication fails?. <password length>: 4 to 8 digits.

“PS“	Phone locked to SIM card. ME requests password when other than current SIM card is inserted. "PS" lock is frequently referred to as "phone lock", or "device lock". Accordingly, the password may be called "phone code" or "device code". The "PS" password is not associated with the PUK of the SIM card. It must be defined before the first use of <facility> "PS" with AT+CLCK. <password length>: 4 digits. If incorrectly entered three times, the Master Phone Code is required to lift the lock. This Unblocking procedure is performed with AT+CPWD using the following parameters: <facility>="PS", <old password>= Master Phone Code (to be obtained from the module manufacturer), and <new password>= the new phone code ("PS" password for lock facility), if desired. Mind that successful PIN authentication is a prerequisite for use of AT command AT+CPWD. If Pin authentication has not been completed, input of the Master Phone code password is possible only with AT command AT+CPIN or ATD. For further detail please refer to Section 5.1.1, What to do if PIN or password authentication fails?. Once the Master Phone Code has been acctepted, the mobile is operational, and the "PS" lock is no longer active. If needed it must be set once again with AT+CLCK.
“P2“	SIM PIN 2, e.g. required for authentication with facility lock "FD" (cf. AT+CLCK). If incorrectly entered three times, the SIM PUK 2 is required to perform authentication. Input of the SIM PUK 2 password is possible only with AT command AT+CPIN2 or ATD. For further detail please refer to Section 5.1.1, What to do if PIN or password authentication fails?. <password length>: 4 to 8 digits.

Factory defined SIM locks:

Typical examples of factory set SIM locks are prepaid phones or network locks, used to restrict the operation of a mobile to a specific provider or operator. The client should be aware that each of these lock types can only be unlocked if the associated password is available. For example, a mobile can be locked to accept only SIM cards from the respective provider, or even one single SIM card. Once a different SIM card is inserted the ME will prompt the client to enter a specific code. This is not the PUK of the SIM card, but usually an 8-digit code which needs to be requested from the provider.
The locks can only be set by the manufacturer and need to be agreed upon between the parties concerned, e.g. provider, operator, distributor etc. on the one side and the manufacturer on the other side. For details contact your local dealer or Cinterion Wireless Modules GmbH.

“PF“	Lock Phone to the very First SIM card
“PN“	Network Personalisation
“PU“	Network subset Personalisation
“PP“	Service Provider Personalisation
“PC“	Corporate Personalisation

Supplementary Service Call Barring:

Supplementary Service "Call Barring" allows to specify conditions under which calls will be disallowed by the network.
The availability of the Supplementary Services varies with the network. To benefit from call barring the client will need to subscribe them, though a limited number of call barring types may be included in the basic tariff package.
<password length>: The Network Password needs to be supplied from the network provider or network operator. Usually there is one 4 digit password which applies to all call barring options. For details contact your provider.

“AO“	BAOC (Bar All Outgoing Calls)
“OI“	BOIC (Bar Outgoing International Calls)
“OX“	BOIC-exHC (Bar Outgoing International Calls except to Home Country)
“AI“	BAIC (Bar All Incoming Calls)

“IR“	BIC-Roam (Bar Incoming Calls when Roaming outside the home country)
“AB“	All Barring services
“AG“	All outGoing barring services
“AC“	All inComing barring services

`<password length>`(num)

4...8	Length of password. The range of permitted length for a password depends on the associated `<facility>`. It is available from the test command response, or in the description of parameter `<facility>`.

`<old password>`(str)

Password specified for the facility.
Parameter `<old password>` can be ignored if no old password was allocated to the facility.
Take into account that a password may have already been set by factory, or that the service is subject to a password issued by the provider. See notes above or contact provider.

`<new password>`(str)

New password. Mandatory, if `<old password>` was an unblocking key (such as the Master Phone Code).

Note

- When changing PIN2 (`<facility>`="P2") it is recommended to check the new state of PIN2 by using the `AT+CPIN2` command.

Examples

EXAMPLE 1

To change PIN2

`AT+CPWD="P2","0000","8888"`	(where "0000" = old PIN2 and "8888" = new PIN2)
`OK`	PIN2 Password has been changed to "8888"

EXAMPLE 2

To set password used to enable or disable barring of all outgoing calls:

`AT+CPWD="AO","0000","3333"`	Requests the network to change the password for supplementary service "call barring".
`OK`	Usually this request will affect all barring services, even though the request is issued for Supplementary Service BAOC ("Barring of all outgoing calls") only. Refer to the respective network provider for detail.

EXAMPLE 3

Handling of the "PS" lock password

`AT+CMEE=2`	Enable text output of CME Error information
`AT+CPWD="PS","1111","2222"`	(where "1111" = old password and "2222" = new password)
`OK`	Password for facility "PS" is now "2222"
`AT+CPWD="PS","1111","2222"`	Repeat command to provoke error "incorrect password"
`+CME ERROR: incorrect password`	("1111" is no longer the correct password)

EXAMPLE 4

To specify a new "PS" lock password, after the old password was disabled (e.g. after three failed attempts to change the "PS" password): use the master phone code.
CAUTION: THIS TEST SHOULD BE PERFORMED ONLY IF THE CORRECT MASTER PHONE CODE FOR THE INDIVIDUAL ME USED IS DEFINITELY AVAILABLE! Otherwise the module used will be rendered useless until the correct master phone code is entered!:

`AT+CPWD="PS","12345678","1111"`	where 12345678 is the Master Phone Code and 1111 is the new password. You may also use `<new password>` to restore the former disabled password.
`OK`	

Alternatively, without giving a new password:

`AT+CPWD="PS","12345678"`	(where 12345678 is the Master Phone Code). Deactivates the present phone lock.
`OK`	

5.7 AT^SPWD Change Password

The AT^SPWD command provides the same functions as AT+CPWD. The major difference between both commands is that, apart from the different prefixes "^SPWD" and "+CPWD", the AT^SPWD command includes additional functions dedicated to the Customer SIM Lock. Please note that this feature is only supported by specifically pre-configured BGS2-E modules and, therefore, not part of the standard "BGS2-E AT Command Set". Ordering information and a detailed description of the "Customer SIM Lock" feature can be requested from Cinterion Wireless Modules GmbH. All other functions and parameters of AT^SPWD are described in Section 5.6, AT+CPWD.

Each password is a string of digits the length of which varies with the associated facility. The test command returns a list of pairs which represent the available facilities and the maximum length of the associated password.

See also AT commands AT+CLCK and AT^SLCK for more detail on the various lock features.

Syntax

Test Command

```
AT^SPWD=?
```

Response(s)

```
^SPWD: list of supported ( <facility>, <password length>)
OK
```

Write Command

```
AT^SPWD=<facility>, <old password>[, <new password>]
```

Response(s)

New password has been registered for the facility lock function.

```
OK
```

If parameter <old password> was not correct:

```
+CME ERROR: 16 (+CME ERROR: incorrect password)
```

If the password for the selected <facility> has been invalidated due to too many failed attempts:

```
+CME ERROR: ...
```

If error is related to ME functionality:

```
+CME ERROR: <err>
```

PIN	ASC0	ASC1	MUX1	MUX2	MUX3		Last
+	+	+	+	+	+	-	-

Note

- When changing the PIN2 (<facility>="P2") it is recommended to check the new state of PIN2 using the AT+CPIN2 command.

6. Identification Commands

The AT Commands described in this chapter allow the external application to obtain various identification information related to the BGS2-E and linked entities.

6.1 ATI Display product identification information

The ATI execute command delivers a product information text.
The "Revision" information consists of the following parts: Version xx and variant yyy of software release.

Syntax

Exec Command

```
ATI
```

Response(s)

```
Cinterion
BGS2-E
REVISION xx.yyy
OK
```

Exec Command

```
ATI[<value>]
```

Response(s)

```
OK
```

Exec Command

```
ATI1
```

Response(s)

```
Cinterion
BGS2-E
REVISION xx.yyy
A-REVISION aa.bbb.cc
OK
```

PIN	ASC0	ASC1	MUX1	MUX2	MUX3		Last
-	+	+	+	+	+	-	-

Reference(s)

V.250

Parameter Description

<value>(num)

Values are not supported and only return OK.

Note

- "A-REVISION aa.bbb.cc" information consists of the following parts:
  Application Revision Number 'aa' as an indication of the supported application ('01' ... no dedicated application is present, ATC is the default application).
  Application Revision Version 'bbb' as an assignment to changes in customer application.
  'cc' as an additional number, e.g. defined by customer.

6.2 AT+CGMI Request manufacturer identification

AT+CGMI returns a manufacturer identification text. See also: AT+GMI.

Syntax

Test Command
AT+CGMI=?
Response(s)
OK

Exec Command
AT+CGMI
Response(s)
Cinterion OK

PIN	ASC0	ASC1	MUX1	MUX2	MUX3		Last
-	+	+	+	+	+	-	-

Reference(s)
GSM 07.07

6.3 AT+GMI Request manufacturer identification

AT+GMI returns a manufacturer identification text. See also: AT+CGMI.

Syntax

Test Command
AT+GMI=?
Response(s)
OK

Exec Command
AT+GMI
Response(s)
Cinterion OK

PIN	ASC0	ASC1	MUX1	MUX2	MUX3		Last
-	+	+	+	+	+	-	-

Reference(s)
V.250

6.4 AT+CGMM Request model identification

AT+CGMM returns a product model identification text. Command is identical with AT+GMM.

Syntax

Test Command
AT+CGMM=?
Response(s)
OK

Exec Command
AT+CGMM
Response(s)
BGS2-E OK

PIN	ASC0	ASC1	MUX1	MUX2	MUX3		Last
-	+	+	+	+	+	-	-

Reference(s)
GSM 07.07

6.5 AT+GMM Request model identification

AT+GMM returns a product model identification text. Command is identical with AT+CGMM.

Syntax

Test Command
AT+GMM=?
Response(s)
OK

Exec Command
AT+GMM
Response(s)
BGS2-E OK

PIN	ASC0	ASC1	MUX1	MUX2	MUX3		Last
-	+	+	+	+	+	-	-

Reference(s)
V.250

6.6 AT+CGMR Request revision identification of software status

AT+CGMR delivers a product firmware version identification. Command is identical with AT+GMR.

Syntax

Test Command
AT+CGMR=?
Response(s)
OK

Exec Command
AT+CGMR
Response(s)
REVISION <number> OK

PIN	ASC0	ASC1	MUX1	MUX2	MUX3		Last
-	+	+	+	+	+	-	-

Reference(s)
GSM 07.07

Parameter Description

<number>(str)

Version xx and variant yyy of software release.

6.7 AT+GMR Request revision identification of software status

AT+GMR delivers a product firmware version identification. Command is identical with AT+CGMR.

Syntax

Test Command
AT+GMR=?
Response(s)
OK

Exec Command
AT+GMR
Response(s)
REVISION <number> OK

PIN	ASC0	ASC1	MUX1	MUX2	MUX3		Last
-	+	+	+	+	+	-	-

Reference(s)
V.250

Parameter Description

<number>(text)

Version xx and variant yyy of software release.

6.8 AT+CGSN Request International Mobile Equipment Identity (IMEI)

AT+CGSN delivers the International Mobile Equipment Identity (IMEI). Command is identical with: AT+GSN.

Syntax

Test Command
AT+CGSN=?
Response(s)
OK

Exec Command
AT+CGSN
Response(s)
<sn> OK

PIN	ASC0	ASC1	MUX1	MUX2	MUX3		Last
-	+	+	+	+	+	-	-

Reference(s)
GSM 07.07

Parameter Description

<sn>(str)

International Mobile Equipment Identity (IMEI) used to identify a GSM mobile equipment to the GSM network

6.9 AT+GSN Request International Mobile Equipment Identity (IMEI)

AT+GSN delivers the International Mobile Equipment Identity (IMEI). Command is identical with AT+CGSN

Syntax

Test Command
AT+GSN=?
Response(s)
OK

Exec Command
AT+GSN
Response(s)
<sn> OK

PIN	ASC0	ASC1	MUX1	MUX2	MUX3		Last
-	+	+	+	+	+	-	-

Reference(s)
V.250

Parameter Description

<sn>(str)

International Mobile Equipment Identity (IMEI) used to identify a GSM mobile equipment to the GSM network.

6.10 AT+CIMI Request International Mobile Subscriber Identity (IMSI)

AT+CIMI delivers the International Mobile Subscriber Identity (IMSI). The IMSI permits the TE to identify the individual SIM attached to the ME.

Syntax

Test Command
AT+CIMI=?
Response(s)
OK

Exec Command
AT+CIMI
Response(s)
<imsi> OK ERROR +CME ERROR: <err>

PIN	ASC0	ASC1	MUX1	MUX2	MUX3	Last	
+	+	+	+	+	+	-	-

Reference(s): GSM 07.07

Parameter Description

<imsi>(str)

International Mobile Subscriber Identity (string without quotes).

7. Call related Commands

The AT Commands described in this chapter are related to Mobile Originated (MOC, i.e. outgoing) Calls and Mobile Terminated (MTC, i.e. incoming) Calls.

7.1 Call Status Information

For Circuit switched calls, including voice, fax and data calls, call status information is available with URC "+CIEV: call" (configurable via AT commands AT+CIND and AT+CMER) or - in more detail - from the list of current calls. This list can be displayed on request via at commands AT+CLCC and AT^SLCC. It can also be issued by the ME in the form of an unsolicited result code "^SLCC" if configured with AT^SLCC and AT+CMER.
URC "+CIEV: call" and URC "^SLCC" can be configured using AT command AT^SCFG. An overview of the possible configurations and their consequences for the availability of call status information will be given here.

Generally speaking, the call status values recognized by the ME are as follows:

- active
- held
- dialing (MOC)
- alerting (MOC)
- incoming (MTC)
- waiting (MTC)
- terminating: The call is not active anymore, but inband information is still available.
- dropped: The call has been suspended by the network, but may be resumed later.

The values "terminating" and "dropped" are not standardized for AT command AT+CLCC, and therefore only available for command AT^SLCC. A call in any of these two states will not appear in the list of current calls as displayed with AT+CLCC.
A call that is not recognized by the ME is considered to be in "unknown" state.
Some networks may schedule a traffic channel for a call that is not yet in the "active" state. This is reflected in parameter <traffic channel assigned> of AT command AT^SLCC and the corresponding URC.
Depending on the value of AT^SCFG setting <succ>, Indicator "+CIEV" will be issued (if configured with AT+CIND and AT+CMER)

- when a state transition ends in state "active" or in state "unknown"
  (if AT^SCFG setting <succ>="restricted").
- when any state transition (including transitions beginning or ending in state "unknown") occurs in the list of active calls, or when a traffic channel is established
  (if AT^SCFG setting <succ>="verbose").

The indicator value for indicator "+CIEV: call" will be "1" if at least one call is in states "held" or "active", and "0" otherwise.

Depending on the value of AT^SCFG setting <sucs>, Indicator "^SLCC" will be issued (if configured with write command AT^SLCC and AT+CMER)

- when a state transition ends in state "active" or in state "unknown" (if AT^SCFG setting <sucs>="restricted")
- when any state transition (including transitions beginning or ending in state "unknown") occurs in the list of active calls, or when a voice channel is established (if AT^SCFG setting <sucs>="verbose").

Due to compatibility considerations, the powerup default for AT^SCFG setting <succ> is "restricted", offering compatibility to the standard behaviour of indicator "+CIEV: call", while the default for setting <sucs> is "verbose".
In order to see the URCs, event reporting for both indicators must be explicitly configured with the appropriate AT commands.

7.2 ATA Connect to Incoming Call

ATA connects the BGS2-E to an incoming voice or data call, which is indicated by a "RING" URC. AT+CRC allows to customize the format of the incoming call URC.
ATA may also be used to accept a network request for a PDP context activation (see ATA).

Syntax

Exec Command

```
ATA
```

Response(s)

In case of incoming data call, if successfully connected (ME switches to data mode):

```
CONNECT <text>
```

In case of voice call, if successfully connected:

```
OK
```

When ME returns to command mode after call release:

```
OK
```

If incoming call is not available, i.e. already disconnected or hanged up:

```
NO CARRIER
```

PIN	ASC0	ASC1	MUX1	MUX2	MUX3	🔔	Last
+	+	+	+	+	+	-	-

Reference(s)

V.250

Parameter Description

`<text>`(str)

Connection speed

Presented only if ATX parameter setting is greater 0.
Possible connection speed values:

“300“

“1200“

“2400“

“4800“

“9600“

“14400“

Notes

- Additional AT commands on the same command line are ignored.
- ATA may be aborted if receiving a character during execution. It can't be aborted in some connection setup states, such as handshaking.
- If AT+FCLASS setting is 1 or 2, all incoming calls will be answered as fax calls, when ATA is issued on multiplexer channel 1 resp. ASC0. For calls explicitly signalled as voice or data calls, this procedure will fail with result code "NO CARRIER", but the call in question will continue to ring.
  It is possible to change the setting for AT+FCLASS to 0 while the call is ringing, and accept the call normally afterwards with ATA.

7.3 ATD Mobile originated call to specified number

Syntax

Exec Command

ATD<n>[<mgsm>][;]

Response(s)

If no dialtone (parameter setting ATX2 or ATX4):
NO DIALTONE
If busy (parameter setting ATX3 or ATX4):
BUSY
If a connection cannot be set up:
NO CARRIER
NO DIALTONE
If successfully connected and non-voice call (TA switches to online data mode):
CONNECT <text>
When TA returns to command mode after call release:
OK
If successfully connected and voice call:
OK

PIN	ASC0	ASC1	MUX1	MUX2	MUX3		Last
±	+	±	+	±	±	-	-

Reference(s)

V.250

Command Description

This command can be used to set up outgoing voice, data or fax calls. It also serves to control Supplementary Services. The termination character ";" is mandatory to set up voice calls or to send *# codes for Supplementary Services. It must not be used for data and fax calls.

Additional notes on the responses returned after dialing with ATD:

- For voice calls, you have the choice of two different response modes that can be selected with AT^SM20:
  AT^SM20=1 (factory default) causes the ME to respond once the call setup is completed either successfully ("OK") or unsuccessfully ("NO CARRIER", "NO DIALTONE", "BUSY").
  AT^SM20=0 causes the ME to return "OK" immediately after dialing was completed (i.e. before call setup terminates successfully or unsuccessfully).
- For data connections, call setup always terminates when the call has been established (indicated by the result code "CONNECT <text>"), or when it fails (indicated by "NO CARRIER"). The settings of AT^SM20 do not apply.

Different call release indications:

- Upon termination, an outgoing fax or data call may show a different result code than a voice call would show under identical conditions. In order to track down the actual reason for call termination, AT+CEER or ATS18 should be used for all applicable connections.

Using ATD during an active call:

- When a user originates a second voice call while there is already an active voice call, the first call will automatically put on hold. The second call attempt is acknowledged with "OK" immediately after dialing with ATD has completed, without relation to a successful call setup. In case of failure, the additional result codes "NO CARRIER", "NO DIALTONE", "BUSY" will be presented afterwards (see example below).

Parameter Description

<n>(text)

String of dialing digits and optional V.250 modifiers: 0-9, *, #, +, A, B, C, D and p
The following V.250 modifiers are ignored: ,(comma), T, !, W ,@

<mgsm>(str)

String of GSM modifiers:
I Activates CLIR (disables presentation of own phone number to called party, if no *#31#-code is within the dial string)
i Deactivates CLIR (enables presentation of own phone number to called party, if no *#31#-code is within the dial string)
G Activate Closed User Group explicit invocation for this call only.
g Deactivate Closed User Group explicit invocation for this call only.

Notes

- The command may be aborted generally when receiving a character during execution. It cannot be aborted in some connection setup states, such as handshaking.
- <mgsm> is not supported for data calls.
- <n> is default for last number that can be dialled by ATDL.
- See also ATX for <text>.
- If ATD is used with a USSD command (e.g. ATD*100#;) an AT+CUSD=1 is executed implicitly (see AT+CUSD).
- Parameter 'G' or 'g' will be ignored if Closed User Group was already activated, respectively deactivated with AT+CCUG command before. Call by call invocation of CUG uses the settings provisioned by the provider or, if available, the settings of the parameters <index> and <info> made with AT+CCUG.
- The ME is equipped with a "Blacklist" function according to GSM02.07 Annex A. The handling of failed call attempts follows the timing restrictions specified there. When the maximum number of failed call attempts is reached the number will be blacklisted. Call attempts to blacklisted numbers will be barred by the ME and not signalled to the network.
  An attempt to start a voice call to a barred phone number is denied with a "+CME ERROR: call barred".
  An attempt to start a data or fax call to a barred phone number is denied with "NO CARRIER".
  According to GSM02.07 Annex A, the barred numbers will be removed from the blacklist after a call attempt was successful or after module restart.
- Emergency calls:
  If no SIM is inserted, call numbers 000, 08, 110, 112, 118,119, 911 and 999 cause an emergency call setup.
  If a SIM with ECC file is inserted, 112 and 911 and all additional call numbers stored in the ECC file cause an emergency call setup.
  If a SIM without or empty ECC file is inserted, call numbers 112 and 911 and in addition all call numbers specified with AT^SCFG, "Call/ECC", parameter <ecc> will cause an emergency call setup.
- When using the command on the second serial interface please see also Section 1.9.
- DTMF transmission:
  If a dial string contains the call modifier "p" the digits after this call modifier till the end are handled as DTMF tones, which are transmitted at connect state for voice calls. When encountering the DTMF separator subsequently, the module will insert a pause.

Example

The following example shows the call setup procedure when a call is already active and a second call attempt fails because the line of the called party is busy:

ATD03012345678;	Dialing out the first party's number.
OK	The first call is established.
ATD03022222222;	The number of the second party is dialed.
OK	The response "OK" is issued immediately though no call is established (same behavior as is you had chosen AT^SM20=0.)
BUSY	Line of the second called party is busy.

7.4 ATD><mem><n> Mobile originated call using specific memory and index number

Syntax

Exec Command

ATD><mem><n>[<mgsm>];

Response(s)

ERROR
+CME ERROR: <err>
If no dialtone (parameter ATX2 or ATX4):
NO DIALTONE
If busy (parameter setting ATX3 or ATX4):
BUSY
If connection cannot be set up:
NO CARRIER
NO DIALTONE
When TA returns to command mode after call release:
OK
If successfully connected:
OK

PIN	ASC0	ASC1	MUX1	MUX2	MUX3		Last
+	+	±	+	±	±	-	-

Reference(s)

V.250

Command Description

TA attempts to set up an outgoing call to the specified number. The termination character ";" is mandatory since dialing from a phonebook is only supported for voice calls and for sending *# codes of Supplementary Services or other functions.

Parameter Description

<mem>(str)

Phonebook storage:
For detailed description of storages see AT+CPBS.

“FD“	Fixed dialing phonebook
“SM“	SIM phonebook
“ON“	MSISDN list
“ME“	Mobile Equipment Phonebook
“LD“	Last number dialed phonebook
“MC“	Missed (unanswered received) calls list
“RC“	Received calls list
“VM“	CPHS voice mailbox phonebook

<n>(num)

Integer type memory location in the range of locations available in the selected memory, i.e. the index number returned by AT+CPBR.

<mgsm>(str)

String of GSM modifiers:
I Activates CLIR (disables presentation of own phone number to called party, if no *#31#-code is within the dial string)
i Deactivates CLIR (enables presentation of own phone number to called party, if no *#31#-code is within the dial string)

Notes

- This command may be aborted generally by receiving a character during execution. Abortion is not possible during some states of connection setup such as handshaking.
- There is no <mem> for emergency call ("EN").
- The command is not applicable to data calls. Any attempt to dial a data call number from <mem> causes the result code "NO CARRIER" to appear.
- Parameter <mgsm> only if no *# code is within the dialing string.
- See ATX for setting result code and call monitoring parameters.

Examples

EXAMPLE 1

To query the location number of the phonebook entry:

```
AT+CPBR=1,xx
```

TA returns the entries available in the active phonebook.

EXAMPLE 2

To dial a number from the SIM phonebook, for example the number stored to location 15:

```
ATD>"SM"15;
OK
```

EXAMPLE 3

To dial a phone number stored in the last dial memory on the SIM card:

```
ATD>"LD"9;
OK
```

7.5 ATD><n> Mobile originated call from active memory using index number

Syntax

Exec Command

ATD><n>[<mgsm>];

Response(s)

ERROR
+CME ERROR: <err>
If no dialtone (parameter ATX2 or ATX4):
NO DIALTONE
If busy (parameter setting ATX3 or ATX4):
BUSY
If connection cannot be set up:
NO CARRIER
NO DIALTONE
When TA returns to command mode after call release:
OK
If successfully connected:
OK

PIN	ASC0	ASC1	MUX1	MUX2	MUX3		Last
+	+	±	+	±	±	-	-

Reference(s)

V.250

Command Description

TA attempts to set up an outgoing call to the stored number. The termination character ";" is mandatory since dialing from a phonebook is only supported for voice calls and for sending *# codes of Supplementary Services or other functions.

Parameter Description

<n>(num)

Integer type memory location in the range of locations available in the selected memory, i.e. the index number returned by AT+CPBR.

<mgsm>(str)

String of GSM modifiers:
I Activates CLIR (disables presentation of own phone number to called party)
i Deactivates CLIR (enables presentation of own phone number to called party)

Notes

- This command may be aborted generally by receiving a character during execution. Abortion is not possible during some states of connection setup such as handshaking.
- The command is not applicable to data calls. Any attempt to dial a data call number from <n> causes the result code "NO CARRIER" to appear.
- Parameter <mgsm> only if no *# code is within the dialing string.

7.6 ATD><str> Mobile originated call from active memory using corresponding field

Syntax

Exec Command

ATD><str>[<mgsm>];

Response(s)

ERROR
+CME ERROR: <err>
If no dialtone (parameter ATX2 or ATX4):
NO DIALTONE
If busy (parameter setting ATX3 or ATX4):
BUSY
If connection cannot be set up:
NO CARRIER
NO DIALTONE
When TA returns to command mode after call release:
OK
If successfully connected:
OK

PIN	ASC0	ASC1	MUX1	MUX2	MUX3		Last
+	+	±	+	±	±	-	-

Reference(s)

V.250

Command Description

This command searches the active phonebook for a given string <str> and dials the assigned phone number. The termination character ";" is mandatory since dialing from a phonebook is only supported for voice calls and for sending *# codes of Supplementary Services or other functions.

Parameter Description

<str>(str)(+CSCS)

String type value ("x") that should equal an alphanumeric field in at least one phonebook entry in the searched memories; used character set should be the one selected with AT+CSCS. <str> can contain escape sequences as described in chapter "Supported character sets".
<str> must be wrapped in quotation marks (""), if escape sequences or parameter <mgsm> are used or if the alphanumeric strings contains a blank. If not, quotation marks are optional. If AT+CSCS is set to "UCS2", with respect to the coding of UCS2-characters only phonebook entries that contain an alphanumeric string with a size less than the half of the parameter <tlength> from AT+CPBW can be dialed.

<mgsm>(str)

String of GSM modifiers:
I Activates CLIR (disables presentation of own phone number to called party, if no *#31#-code is within the dial string)
i Deactivates CLIR (enables presentation of own phone number to called party, if no *#31#-code is within the dial string)

Notes

- This command may be aborted generally by receiving a character during execution. Abortion is not possible during some states of connection setup such as handshaking.
- The command is not applicable to data calls. Any attempt to dial <str> without semicolon ";" causes the result code "NO CARRIER" to appear.
- Parameter <mgsm> only if no *# code is within the dialing string.

7.7 ATDI Mobile originated data call to ISDN number

Syntax

Exec Command

ATDI<n>

Response(s)

If no dialtone (parameter ATX2 or ATX4):
NO DIALTONE
If busy (parameter setting ATX3 or ATX4):
BUSY
If connection cannot be set up:
NO CARRIER
NO DIALTONE
All other error reasons:
+CME ERROR: <err>
If successfully connected :
CONNECT <text>
When TA returns to command mode after call release:
OK

PIN	ASC0	ASC1	MUX1	MUX2	MUX3	Last
+	+	-	+	-	-	-	-

Reference(s)

V.250

Command Description

TA attempts to set up an outgoing data call to ISDN number.

Parameter Description

<n>(str)

ISDN number
String with maximum length of 20 characters. Allowed characters: +, 0-9, A, B, C.

Note

- This command may be aborted generally by receiving a character during execution. Abortion is not possible during some states of connection setup such as handshaking.

7.8 ATDL Redial last number used

Syntax

Exec Command

`ATDL[;]`

Response(s)

If there is no last number or number is not valid:
`+CME ERROR: <err>`
If no dialtone (parameter ATX2 or ATX4):
`NO DIALTONE`
If busy (parameter setting ATX3 or ATX4):
`BUSY`
If connection cannot be set up:
`NO CARRIER`
`NO DIALTONE`
If successfully connected and non-voice call (TA switches to online data mode):
`CONNECT <text>`
When TA returns to command mode after call release:
`OK`
If successfully connected and voice call:
`OK`

PIN	ASC0	ASC1	MUX1	MUX2	MUX3		Last
+	+	±	+	±	±	-	-

Reference(s)

V.250

Command Description

This command redials the last voice and data call number used in the ATD command. If terminated with semi-colon ";" ATDL dials the last voice call number stored in the "LD" phonebook. Otherwise, the last dialed data or fax number will be used (not contained in the "LD" phonebook).

Notes

- This command may be aborted generally by receiving a character during execution. Abortion is not possible during some states of connection setup such as handshaking.
- Parameter "I" and "i" only if no *#-code is within the dial string.

7.9 ATH Disconnect existing connection

Syntax

Exec Command
ATH[<n>]
Response(s)
OK

PIN	ASC0	ASC1	MUX1	MUX2	MUX3		Last
-	+	+	+	+	+	-	-

Reference(s)
V.250

Command Description

Disconnect existing call from command line by local TE and terminate call.

Parameter Description

<n>(num)	
[0]	disconnect from line and terminate call

Notes

- OK is issued after circuit 109 (DCD) is turned off, if it was previously on.
- ATH terminates every circuit switched call (voice, data or fax), even if it is issued via another interface. This behavior is in accordance with ITU-T V.250; (07/97, "Hook control": "ATH is terminating any call in progress.").
- ATH clears any active PDP context or terminates any existing PPP connection, but only if issued on the same interface where GPRS is used and if there is no pending network request for PDP context activation. It does not affect PDP contexts and PPP connections on other interfaces (see also Section 11.20, Manual rejection of a network request for PDP context activation.

7.10 AT+CHUP Hang up call

Syntax

Test Command
AT+CHUP=?
Response(s)
OK ERROR +CME ERROR: <err>

Exec Command
AT+CHUP
Response(s)
OK ERROR +CME ERROR: <err>

PIN	ASC0	ASC1	MUX1	MUX2	MUX3		Last
-	+	+	+	+	+	-	-

Reference(s)
GSM 07.07

Command Description

Cancels all active and held calls.

Note

- AT+CHUP implements the same function as ATH.

7.11 AT^SHUP Hang up call(s) indicating a specific GSM04.08 release cause

The AT^SHUP write command terminates calls known to the ME and indicates a specific GSM04.08 release cause specified by the user. The command can be used for voice, Fax and data calls. Calls will be terminated regardless of their current call status, which may be any of the states listed with AT+CLCC.

Syntax

Test Command

AT^SHUP=?

Response(s)

OK

Write Command

AT^SHUP=<cause>[, <cn>]

Response(s)

OK
ERROR

PIN	ASC0	ASC1	MUX1	MUX2	MUX3		Last
+	+	+	+	+	+	-	-

Parameter Description

<cause>(num)

Release cause

GSM04.08 release cause to be indicated to the network.
The BGS2-E will release the selected connection(s) with release cause indication "cause" and location "user" (0) in the "disconnect" protocol message to the network. It depends on the network whether or not the release cause will be forwarded to the remote party.

1	Send GSM04.08 release cause "unassigned (unallocated) number"
16	Send GSM04.08 release cause "normal call clearing "
17	Send GSM04.08 release cause "user busy "
18	Send GSM04.08 release cause "no user responding "
27	Send GSM04.08 release cause "destination out of order "
31	Send GSM04.08 release cause "normal, unspecified"

<cn>(num)

Call number

The "call number" is an optional index used in the list of current calls indicated by AT+CLCC. The AT^SHUP command will terminate the call identified by the given call number. The default call number "0" is not assigned to any call, but signifies "all calls". As "0" is the default value, it may be omitted.

[0]	Terminate all known calls.
1...7	Terminate the specific call number <cn>.

7.12 ATS0 Set number of rings before automatically answering a call

Syntax

Read Command
ATS0?
Response(s)
<n> OK ERROR

Write Command
ATS0=<n>
Response(s)
OK ERROR

PIN	ASC0	ASC1	MUX1	MUX2	MUX3		Last
±	+	+	+	+	+	-	-

Reference(s)
V.250

Parameter Description

<n>(num)(&W)(&V)	
000(&F)	Automatic answer mode is disabled.
001-255	Enable automatic answering after specified number of rings.

Notes

- This command works for MT data and fax calls.
- Autoanswering of CSD data and fax calls is supported on ASC0 /Mux1 only.
- A CSD call will not be automatically answered when the module is in GPRS online mode, but it is possible in GPRS command mode. The application can detect a call by evaluating the RING line and determine whether to change into GPRS command mode or stay in GPRS online mode until GPRS is available again. To answer, to reject or to wait for automatically answering the incoming call the application has to switch into GPRS command mode.
- If <n> is set to higher values, the calling party may hang up before the call is automatically answered.
- The correlation between ATS7 and ATS0 is important.
  Example: Call setup may fail if ATS7=30 and ATS0=20.
- Setting is local to the interface. It is allowed to have different settings on different interfaces. In such cases the interface 'wins', which is idle and uses the smallest <n> value.
- The ATS0 write command is PIN protected.
- According to "3GPP TS 27.007 (GSM 07.07): AT command set for User Equipment (UE)", ATS0 is also used as GPRS compatibility command to answer automatically to a network request for PDP context activation (see Section 11.21). Therefore, when the ATS0 write command is issued with <n> greater than 0, the ME will attempt to perform a GPRS attach if not yet attached and if configured to do so (due to the setting AT^SCFG="GPRS/ATS0/withAttach","on").
  If the automatic GPRS attach fails the ME keeps trying to attach for approx. 5 minutes, before ATS0 ends up with "ERROR" or "+CME ERROR: unknown", though the new <n> value takes effect. To avoid the risk of long response times to ATS0 in such case take care that the parameter AT^SCFG=<gs0aa> is off, if autoanswer mode is not needed for GPRS or if the mobile works in non-GPRS networks.
  The GPRS attach will not be performed on recalling a stored user profile with ATZ or on powerup, even though a value <n> greater than 0 was stored in the user profile with AT&W.

7.13 ATS6 Set pause before blind dialing

ATS6 is implemented for compatibility reasons only, and has no effect.

Syntax

Read Command

```
ATS6?
```

Response(s)

```
<n>
OK
```

Write Command

```
ATS6=<n>
```

Response(s)

```
OK
ERROR
```

PIN	ASC0	ASC1	MUX1	MUX2	MUX3		Last
-	+	-	+	-	-	-	-

Reference(s)

V.250

Parameter Description

<n>(num)(&W)(&V)

7.14 ATS7 Set number of seconds to wait for connection completion

ATS7 specifies the number of seconds the ME will wait for the completion of the call setup when answering or originating a data call. Also referred to as "no answer timeout". To put it plainly, this is the time to wait for the carrier signal. If no carrier signal is received within the specified time, the ME hangs up.

Syntax

Read Command

ATS7?

Response(s)

<n>
OK

Write Command

ATS7=<n>

Response(s)

OK
ERROR

PIN	ASC0	ASC1	MUX1	MUX2	MUX3		Last
-	+	-	+	-	-	-	-

Reference(s)

V.250

Parameter Description

<n>(num)(&W)(&V)

Number of seconds to wait for connection completion

000...060(&F)

Notes

- Command ATS7 is only applicable to data calls.
- Values greater than 60 cause no error, but <n> will be restored to the maximum value of 60.
- The correlation between ATS7 and ATS0 is important. If the called party has specified a high value for ATS0=<n> call setup may fail.
  Example: Call setup may fail if ATS7=30 and ATS0=20.

7.15 ATS8 Comma Dial Pause Time

ATS8 is implemented for compatibility reasons only, and has no effect.

Syntax

Read Command

```
ATS8?
```

Response(s)

```
<n>
OK
```

Write Command

```
ATS8=<n>
```

Response(s)

```
OK
```

PIN	ASC0	ASC1	MUX1	MUX2	MUX3		Last
-	+	-	+	-	-	-	-

Reference(s)

V.250

Parameter Description

<n>(num)(&W)(&V)

7.16 ATS10 Set disconnect delay after indicating the absence of data carrier

ATS10 determines the amount of time, that the ME remains connected in absence of a data carrier. If the data carrier is detected before disconnect, the ME remains connected.

Syntax

Read Command

```
ATS10?
```

Response(s)

```
<n>
OK
```

Write Command

```
ATS10=<n>
```

Response(s)

```
OK
ERROR
```

PIN	ASC0	ASC1	MUX1	MUX2	MUX3	🔔	Last
-	+	-	+	-	-	-	-

Reference(s)

V.250

Parameter Description

<n>(num)(&W)(&V)	
001...2(&F)...254	Number of tenths of seconds to wait before disconnecting after ME has indicated the absence of received line signal

7.17 ATO Switch from command mode to data mode / PPP online mode

Syntax

Exec Command

ATO[<n>]

Response(s)

If connection is not successfully resumed:
NO CARRIER
or
TA returns to data mode from command mode
CONNECT <text>
Note: <text> output only if ATX parameter setting with value > 0.

PIN	ASC0	ASC1	MUX1	MUX2	MUX3	Last
-	+	±	+	-	-	-	-

Reference(s)

V.250

Command Description

ATO is the corresponding command to the +++ escape sequence: When you have established a CSD call or a GPRS connection and TA is in command mode, ATO causes the TA to resume the data or GPRS connection and takes you back to data mode or PPP online mode.

Parameter Description

<n>(num)

[0]	Switch from command mode to data mode

7.18 +++ Escape from Data Mode to AT Command Mode

+++ esacape sequence is only available during a CSD call or a GPRS connection. The +++ character sequence causes the BGS2-E to pause data mode and return to AT command mode. This allows to enter AT commands while maintaining the data connection to the remote device or, accordingly, the GPRS connection. By the way the same task can be performed by toggling the DTR line if AT&D is set to 1. ATO is used to resume data or PPP online mode.
To prevent the +++ character sequence from being misinterpreted as data, it must be preceded and followed by a pause of at least 1000 ms. The +++ characters must be entered in quick succession, all within 1000 ms.

Syntax

Exec Command
+++
Response(s)
OK

PIN	ASC0	ASC1	MUX1	MUX2	MUX3	Last
-	+	±	-	-	-	-

Reference(s)
V.250

Notes

- In Multiplex mode the +++ sequence does not work. Therefore, if required in Multiplex mode, the escape sequence needs to be implemented in the Customer Application. Design solutions, for example using the DTR signal or a modem status command (MSC), can be found in [4], Section "Escape Sequence". Also refer to Section 4.8, AT+CMUX.
- When using XON/XOFF flow control (AT\Q1) in online mode, +++ should not be used while the data transmission is paused with XOFF. Before entering the command mode with +++ the paused transmission should be resumed using the XON character.

7.19 AT+CBST Select Bearer Service Type

AT+CBST write command selects the bearer service <name>, the data rate <speed> and the connection element <ce> to be used when data calls are originated. The settings also apply to mobile terminated data calls, especially when single numbering scheme calls or calls from analog devices are received (see AT+CSNS). See GSM 02.02[1] for a list of allowed combinations of subparameters.

Syntax

Test Command

AT+CBST=?

Response(s)

+CBST: (list of supported<speed>s), (list of supported<name>s), (list of supported<ce>s)
OK

Read Command

AT+CBST?

Response(s)

+CBST: <speed>, <name>, <ce>
OK

Write Command

AT+CBST=<speed>[, <name>[, <ce>]]

Response(s)

OK
ERROR

PIN	ASC0	ASC1	MUX1	MUX2	MUX3		Last
-	+	-	+	-	-	-	-

Reference(s)

GSM 07.07

Parameter Description

<speed>(num)(&W)(&V)

0	Automatic Speed Selection
4	2400 bps (V.22bis)
6	4800 bps (V.32)
[7](&F)	9600 bps (V.32)
14	14400 bps (V.34)
68	2400 bps (V.110)
70	4800 bps (V.110)
71	9600 bps (V.110)
75	14400 bps (V.110)

<name>(num)(&W)

0(&F)	Asynchronous Modem

<ce>(num)(&W)

Transparent mode is not supported.

1(&F)	Non-transparent

7.20 AT+CRLP Configure RLP Parameters for Outgoing Non-Transparent Data Calls

The AT+CRLP write command sets radio link protocol (RLP) parameters used when non-transparent data calls are originated. The read command returns the current settings for the supported RLP version 0.

Syntax

Test Command

AT+CRLP=?

Response(s)

+CRLP: (list of supported<iws>s), (list of supported<mws>s), (list of supported<T1>s), (list of supported<N2>s)
OK

Read Command

AT+CRLP?

Response(s)

+CRLP: <iws>, <mws>, <T1>, <N2>
OK

Write Command

AT+CRLP=[<iws>[, <mws>[, <T1>[, <N2>]]]]

Response(s)

OK
ERROR
+CME ERROR: <err>

PIN	ASC0	ASC1	MUX1	MUX2	MUX3	Last
-	+	-	+	-	-	-	-

Reference(s)

GSM 07.07

Parameter Description

<iws>(num)(&W)(&V)

Interworking window size (IWF to MS)

0...61(&F)

<mws>(num)(&W)(&V)

Mobile window size (MS to IWF)

0...61(&F)

<T1>(num)(&W)(&V)

Acknowledgement timer (T1 in 10 ms units)

48...[78](&F)...255

<N2>(num)(&W)(&V)

Re-transmission attempts N2

1...6(&F)...255

7.21 AT+CLCC List of current calls

The execute command lists all current calls. If the command is successful, but no calls are available, no information response is sent to TE.

Syntax

Test Command

```
AT+CLCC=?
```

Response(s)

```
OK
```

Exec Command

```
AT+CLCC
```

Response(s)

```
[+CLCC: <idx>, <dir>, <stat>, <mode>, <mpty>[, <number>, <type>[, <alpha>]]]
[+CLCC: <idx>, <dir>, <stat>, <mode>, <mpty>[, <number>, <type>[, <alpha>]]]
[+CLCC: ...]
OK
ERROR
+CME ERROR: <err>
```

PIN	ASC0	ASC1	MUX1	MUX2	MUX3	Last
+	+	+	+	+	+	-	-

Reference(s)

GSM 07.07

Parameter Description

<idx>(num)

Call identification number as described in GSM02.30 subclause 4.5.5.1; this number can be used in AT+CHLD command operations

<dir>(num)

0	Mobile originated call (MOC)
1	Mobile terminated call (MTC)

<stat>(num)

State of the call

0	Active
1	Held
2	Dialing (MOC)
3	Alerting (MOC)
4	Incoming (MTC)
5	Waiting (MTC)

<mode>(num)

Bearer/teleservice

0	Voice
1	Data
2	Fax

3	Voice followed by data, voice mode (only in connection with single numbering scheme AT+CSNS)
4	Alternating voice/data, voice mode (only in connection with single numbering scheme AT+CSNS)
5	Alternating voice/fax, voice mode (only in connection with single numbering scheme AT+CSNS)
6	Voice followed by data, data mode (only in connection with single numbering scheme AT+CSNS)
7	Alternating voice/data, data mode (only in connection with single numbering scheme AT+CSNS)
8	Alternating voice/fax, fax mode (only in connection with single numbering scheme AT+CSNS)
9	Unknown

<mpty>(num)

0	Call is not one of multiparty (conference) call parties
1	Call is one of multiparty (conference) call parties

<number>(str)

Phone number in format specified by <type>

<type>(num)

Type of address octect

145	Dialing string <number> includes international access code character '+'
128	Number is restricted
129	Otherwise

<alpha>(str)(+CSCS)

Alphanumeric representation of <number> corresponding to the entry found in phonebook (see for example AT+CPBW, parameter <text>).
Due to time constraints on the necessary evaluation of the phonebook, this parameter may show a default value in early call phases (e.g. for <stat>= "dialing", "incoming" or "alerting"), even if a phonebook entry is present for the number concerned.

Note

- Teleservices other than voice, data, fax are not fully supported by ME. They are used only in connection with the handling for AT+CSNS, and may therefore occur in parameter <mode> for mobile terminated calls.

7.22 AT^SLCC Extended list of current calls

AT^SLCC covers essentially the same information as GSM 07.07 command AT+CLCC, with the following extensions:

- The execute command response contains the additional parameter <traffic channel assigned> which indicates whether the call has been assigned a traffic channel by the network and transmission of DTMF tones, data or inband information is possible.
- The additional write command allows to activate event reporting for the list of current calls. If event reporting is active for an interface, a call status transition (cf. Call Status Information) and (if desired) the assignment of a traffic channel will generate an event report indication to this interface. In order to receive this event report as an URC, the URC presentation mode for this interface has to be configured with AT+CMER. Interface settings are saved with AT&W and can be displayed with AT&V
  The frequency of event report generation can be configured with AT command AT^SCFG. Refer to Call Status Information for further detail on the configuration options.
- The additional read command returns an indication whether event reporting is active for the current interface. Mind that the URC will be displayed only if the URC presentation mode for the interface concerned has been configured with AT+CMER.
- The exec command returns, like AT+CLCC, a list of current calls. If the command is successful, but no calls are available, no information response is sent to the TE.

Syntax

Test Command

```
AT^SLCC=?
```

Response(s)

```
^SLCC: (list of supported<n>s)
OK
```

Read Command

```
AT^SLCC?
```

Response(s)

```
^SLCC: <n>
OK
```

Exec Command

```
AT^SLCC
```

Response(s)

```
[^SLCC:<idx>, <dir>, <stat>, <mode>, <mpty>, <traffic channel assigned>[, <number>,
<type>[, <alpha>]]]
[^SLCC:<idx>, <dir>, <stat>, <mode>, <mpty>, <traffic channel assigned>[, <number>,
<type>[, <alpha>]]]
[^SLCC:...]
OK
ERROR
+CME ERROR: <err>
```

Write Command

```
AT^SLCC=[<n>]
```

Response(s)

```
OK
ERROR
+CME ERROR: <err>
```

PIN	ASC0	ASC1	MUX1	MUX2	MUX3		Last
+	+	+	+	+	+	-	-

Unsolicited Result Code

Unsolicited Call Status information

if the list of current calls is empty:
^SLCC:

if one or more calls are currently in the list:
^SLCC: <idx>, <dir>, <stat>, <mode>, <mpty>, <traffic channel assigned>[, <number>, <type>[, <alpha>]]
[^SLCC: <idx>, <dir>, <stat>, <mode>, <mpty>, <traffic channel assigned>[, <number>, <type>[, <alpha>]]]
[...]
^SLCC:

URC "^SLCC" displays the list of current calls as displayed with the execute command AT^SLCC. The list is displayed in the state it has at the time of display, not in the state it had when the signal was generated.
The URC's occurrence indicates call status changes for any of the calls in the list of current calls.
Please refer to Call Status Information and AT^SCFG for further information about the configuration of this URC.
Event reporting can be enabled separately for each interface. Interface settings are saved with AT&W and can be displayed with AT&V. Additionally, The URC presentation mode for the interface must be configured with AT+CMER.
Depending on the value of AT^SCFG setting <sucs>, Indicator "^SLCC" will be issued (if configured with write command AT^SLCC and AT+CMER)

- when a state transition ends in state "active" or in state "unknown" (if AT^SCFG setting <sucs>="restricted")
- when any state transition (including transitions beginning or ending in state "unknown") occurs in the list of active calls, or when a traffic channel is established (if AT^SCFG setting <sucs>="verbose").

If multiple displays of identical list configurations occur, this happens because of short intermediate states of the list, that have already been overridden by new transitions and states. Thus, it is guaranteed that the configuration displayed is always the current configuration at the time of the last display.
The list of active calls displayed with this URC will always be terminated with an empty line preceded by prefix "^SLCC: ", in order to indicate the end of the list.

Parameter Description

<n>(num)(&W)(&V)	
[0](&F)	Presentation of URC "^SLCC" disabled
1	Presentation of URC "^SLCC" enabled

<idx>(num)	
Call identification number as described in GSM02.30 subclause 4.5.5.1; this number can be used in AT+CHLD command operations.	

<dir>(num)	
0	Mobile originated call (MOC)
1	Mobile terminated call (MTC)

<stat>(num)	
State of the call	
0	Active
1	Held
2	Dialing (MOC)
3	Alerting (MOC)
4	Incoming (MTC)
5	Waiting (MTC)

6	Terminating: The call is not active anymore, but inband information is still available.
7	Dropped: The call has been suspended by the network, but may be resumed later.

<mode>(num)

Bearer/teleservice

0	Voice
1	Data
2	Fax
3	Voice followed by data, voice mode (only in connection with single numbering scheme AT+CSNS)
4	Alternating voice/data, voice mode (only in connection with single numbering scheme AT+CSNS)
5	Alternating voice/fax, voice mode (only in connection with single numbering scheme AT+CSNS)
6	Voice followed by data, data mode (only in connection with single numbering scheme AT+CSNS)
7	Alternating voice/data, data mode (only in connection with single numbering scheme AT+CSNS)
8	Alternating voice/fax, fax mode (only in connection with single numbering scheme AT+CSNS)
9	Unknown

<mpty>(num)

0	Call is not one of multiparty (conference) call parties
1	Call is one of multiparty (conference) call parties

<traffic channel assigned>(num)

0	No traffic channel assigned. Transmission of DTMF tones not possible.
1	Traffic channel is assigned and the progress indicator IE has been received (call setup) or a voice connection has an active state. The parameter indicates that the audio path is activated. DTMF tones can be sent with AT+VTS.

<number>(str)

Phone number in format specified by <type>

<type>(num)

Type of address octect

145	Dialing string <number> includes international access code character '+'
128	Number is restricted
129	Otherwise

`<alpha>`(str)(+CSCS)

Alphanumeric representation of `<number>` corresponding to the entry found in phonebook (see for example `AT+CPBW`, parameter `<text>`).
Due to time constraints on the necessary evaluation of the phonebook, this parameter may show a default value during early call phases (e.g. for `<stat>`= "dialing", "incoming" or "alerting"), even if a phonebook entry is present for the number concerned.

Notes

- Teleservices other than voice, data, fax are not fully supported by ME. They are used only in connection with the handling for `AT+CSNS`, and may therefore occur in parameter `<mode>` for mobile terminated calls.
- If a URC "`^SLCC`" in verbose mode (see `AT^SCFG`) has been buffered while the interface was in dedicated mode (depending on the settings of `AT+CMER` parameter `<bfr>`), each buffered event indicator will be output as a separate URC after the interface returns to idle mode.
  However, the output will deliver the list of current calls in the "current" state (at the time when the output is generated), possibly leading to multiple displays of identical list configurations.
- Some parameters of the `AT+CHLD` command, as well as some situations where the call status in the network changes very quickly (e.g. the transition between `<stat>`= "unknown", "dialing" and "alerting" for a call to a reachable subscriber within the registered network) may lead to quasi-simultaneous changes to the states of one or several calls in the list, possibly leading to multiple displays of identical list configurations.
- If multiple displays of identical list configurations occur, this happens because of intermediate states of the list, that have already been overridden by new transitions and states. Thus, it is guaranteed that the configuration displayed in such cases is the current configuration at the time of the last display.
- It is adviseable to receive URC "`^SLCC`" on an interface that is not used for call initiation, if verbose output is configured. If only voice calls are expected, a setting of `AT^SM20`= 0 may be used alternatively in order to keep the call from blocking the interface.

Examples

EXAMPLE 1

`^SYSSTART`	
`at+cpin=9999`	
`OK`	
`+CREG: 2`	
`+CREG: 1,"0145","0016"`	We are now registered.
`at^sm20=0`	Command `ATD` for an outgoing voice call will terminate immediately with response "OK".
`OK`	
`atd"1234567";`	We start a voice call.
`OK`	"OK" response is issued immediately because of setting `AT^SM20`="0".
`^SLCC: 1,0,2,0,0,0,"1234567",129,"Called Party"`	MO voice call starts, paging B-party.
`^SLCC:`	End of current list
`^SLCC: 1,0,2,0,0,1,"1234567",129,"Called Party"`	Traffic channel established, network may now transmit network announcements, ME may now transmit DTMF tones.
`^SLCC:`	End of current list
`^SLCC: 1,0,3,0,0,1,"1234567",129,"Called Party"`	Call is now ringing at B-Party.
`^SLCC:`	End of current list
`^SLCC: 1,0,0,0,0,1,"1234567",129,"Called Party"`	B-Party has accepted the call, connection established.

^SLCC:	End of current list.
atd23456;	We start a second voice call.
OK	"OK" response is issued immediately because another call is already active (cf. ATD).
^SLCC: 1,0,1,0,0,0,"1234567",129,"Called Party"	The active call is automatically put on hold, triggering the display of the list.
^SLCC: 2,0,2,0,0,1,"23456",129	The second call has already started before the indication for the held call could be displayed
^SLCC:	End of current list.
^SLCC: 1,0,1,0,0,0,"1234567",129,"Called Party"	The identical list is displayed again, triggered by the start of the second voice call.
^SLCC: 2,0,2,0,0,1,"23456",129	The status of the second list entry has already been displayed with the previous URC.
^SLCC:	End of current list.
^SLCC: 1,0,1,0,0,0,"1234567",129,"Called Party"	The held call doesn't change status right now.
^SLCC: 2,0,3,0,0,1,"23456",129	The second call is now alerting the B-Party.
^SLCC:	End of current list.
^SLCC: 1,0,0,0,0,1,"1234567",129,"Called Party"	The held call doesn't change status right now.
^SLCC:	End of current list: the B-Party of the second call has not accepted the call in time, the second call has ended.
NO CARRIER	The second call has ended.
^SLCC:	list is now empty: B-Party has ended the first call.
NO CARRIER	The first call has ended.

EXAMPLE 2

^SLCC: 1,1,4,0,0,1,"1234567",129	Incoming voice call is signalled. Display is triggered by the incoming call, but the current status of the call at the time of display already comprises an active traffic channel.
^SLCC:	End of current list.
RING	Incoming call is signalled.
^SLCC: 1,1,4,0,0,1,"1234567",129	The incoming call had a traffic channel assigned from the start. This second identical display is triggered by the traffic channel assignment. Since the traffic channel was already indicated in the previous URC, both instances of the URC contain identical information.
^SLCC:	End of current list.
RING	Incoming call is signalled.
ata	Incoming call is accepted.
OK	call is established.
^SLCC: 1,1,0,0,0,1,"1234567",129	The call is now active.
^SLCC:	End of current list.
ath	Hang up the call.
OK	hang up complete.
^SLCC:	The list of current calls is empty again.

7.23 AT+CR Service reporting control

AT+CR configures the TA whether or not to transmit an intermediate result code +CR: <serv> to the TE when a call is being set up.
Setting the value of <mode> to 1 may lead to connection failure, if the application (e.g. WinFax) waits for default result code/URC.

Syntax

Test Command

```
AT+CR=?
```

Response(s)

```
+CR: (list of supported<mode>s)
OK
ERROR
```

Read Command

```
AT+CR?
```

Response(s)

```
+CR: <mode>
OK
ERROR
```

Write Command

```
AT+CR=<mode>
```

Response(s)

```
OK
ERROR
```

PIN	ASC0	ASC1	MUX1	MUX2	MUX3		Last
+	+	+	+	+	+	-	-

Reference(s)

GSM 07.07

Intermediate Result Code

If enabled, an intermediate result code is transmitted during connect negotiation when the TA has determined the speed and quality of service to be used, before any error control or data compression reports are transmitted, and before any final result code (e.g. CONNECT) appears.

```
+CR: <serv>
```

Parameter Description

<mode>(num)(&W)(&V)	
0(&F)	Disable
1	Enable

<serv>(str)	
“REL ASYNC“	Asynchronous non-transparent
“GPRS“	GPRS

7.24 AT+CRC Incoming Call Indication Format

AT+CRC controls the format of the incoming call indication.

Syntax

Test Command
AT+CRC=?
Response(s)
+CRC: (list of supported<mode>s) OK ERROR

Read Command
AT+CRC?
Response(s)
+CRC: <mode> OK ERROR

Write Command
AT+CRC=[<mode>]
Response(s)
OK ERROR

PIN	ASC0	ASC1	MUX1	MUX2	MUX3	Last
-	+	+	+	+	+	-	-

Reference(s)
GSM 07.07

Unsolicited Result Codes

URC 1

RING

Incoming call indication if <mode>=0.

URC 2

+CRING: <type>

Incoming call indication if <mode>=1.

Parameter Description

<mode>(num)(&W)(&V)	
[0](&F)	Disable extended format.
1	Enable extended format. Using this mode may lead to connection failures, if the Customer Application (e.g. running WinFax) expects default formatted URCs.

<type>(str)	
“REL ASYNC“	Asynchronous non-transparent
“FAX“	Facsimile

“VOICE“	Voice
“GPRS“	<PDP_type>, <PDP_addr> [,[<L2P>][,<APN>]] GPRS network request for PDP context activation

7.25 AT+CSNS Single Numbering Scheme

The AT+CSNS command enables the ME to accept incoming calls when no bearer capability information is provided with the call, e.g. single numbering scheme calls or calls originating from analog devices.

Syntax

Test Command	
AT+CSNS=?	
Response(s)	
+CSNS: (list of supported<mode>s) OK	

Read Command	
AT+CSNS?	
Response(s)	
+CSNS: <mode> OK	

Write Command	
AT+CSNS=[<mode>]	
Response(s)	
OK ERROR +CME ERROR: <err>	

PIN	ASC0	ASC1	MUX1	MUX2	MUX3	Last
-	+	+	+	+	+	-

Reference(s)
GSM 07.07

Parameter Description

<mode>(num)	
[0](D)	Voice: Each call received without bearer element is assumed to be speech
2	Fax: Each call received without bearer element is assumed to be an incoming fax.
4	Data: Each call received without bearer element is assumed to be a data call. Please take into account that the bearer service parameters set with AT+CBST apply to all data calls including those received without bearer capability.

Notes

- The command must be set before the call comes. By default, when you do not modify the settings, all calls received without bearer element are assumed to be voice.
- The setting will be saved when you power down the ME with AT^SMSO, provided that PIN authentication has been done. The saved value will be restored when the same SIM card is inserted and PIN authentication done again. If no SIM card or a different SIM card is inserted the default value 0 takes effect.

7.26 AT^SCNI List Call Number Information

Syntax

Test Command

```
AT^SCNI=?
```

Response(s)

```
OK
```

Exec Command

```
AT^SCNI
```

Response(s)

```
^SCNI: <id>1[,<cs>[,<number>,<type>]]
^SCNI: <id>2[,<cs>[,<number>,<type>]]
[...]
OK
ERROR
+CME ERROR: <err>
```

PIN	ASC0	ASC1	MUX1	MUX2	MUX3		Last
+	+	+	+	+	+	-	-

Command Description

TA returns a list of current calls of ME.

Parameter Description

<id>(num)

call identification number as described in GSM 02.30[19] subclause 4.5.5.1; this number can be used in AT+CHLD command operations

1...7

<cs>(num)

Call status of respective call number (first parameter)

0	call hold
1	call in progress
2	waiting call

<number>(str)

string type phone number in format specified by <type>

<type>(num)

type of address octet in integer format; 145 when dialling string includes international access code character "+", 128 when number is restricted otherwise 129

Note

- See also GSM 07.07: AT+CLCC

7.27 AT^SLCD Display Last Call Duration

Syntax

Test Command
AT^SLCD=?
Response(s)
OK ERROR +CME ERROR: <err>

Exec Command
AT^SLCD
Response(s)
^SLCD: <time> OK ERROR +CME ERROR: <err>

PIN	ASC0	ASC1	MUX1	MUX2	MUX3	🔔	Last
+	+	+	+	+	+	-	-

Command Description

TA returns last call duration or current call duration.

Parameter Description

<time>(str)

Format is "hh:mm:ss", where characters indicate hours, minutes, seconds; E.g. 22:10:00 "22:10:00"
Max value is 9999:59:59

Note

- The proper working of that command is network dependant.

7.28 AT^STCD Display Total Call Duration

Syntax

Test Command

```
AT^STCD=?
```

Response(s)

```
OK
ERROR
+CME ERROR: <err>
```

Exec Command

```
AT^STCD
```

Response(s)

```
^STCD: <time>
OK
ERROR
+CME ERROR: <err>
```

PIN	ASC0	ASC1	MUX1	MUX2	MUX3		Last
+	+	+	+	+	+	-	-

Command Description

TA returns total call duration (accumulated duration of all calls).

Parameter Description

<time>(str)

Format is "hh:mm:ss", where characters indicate hours, minutes, seconds; E.g. 22:10:00 "22:10:00"
Max value is 9999:59:59

Notes

- The Total Call Duration will not be reset by power off or other means.
- The proper working of that command is network dependant and only for MO calls.

7.29 ATP Select pulse dialing

Syntax

Exec Command
ATP
Response(s)
OK

PIN	ASC0	ASC1	MUX1	MUX2	MUX3		Last
-	+	-	+	-	-	-	-

Reference(s)
V.250

Note

- No effect for GSM.

7.30 ATT Select tone dialing

Syntax

Exec Command
ATT
Response(s)
OK

PIN	ASC0	ASC1	MUX1	MUX2	MUX3		Last
-	+	-	+	-	-	-	-

Reference(s)
V.250

Note

- No effect for GSM.

7.31 ATS2 Set escape sequence character

The ATS2=43 is implemented for V.250ter compatibility reasons only, and has no effect.

Syntax

Read Command

```
ATS2?
```

Response(s)

```
<n>
OK
```

Write Command

```
ATS2=<n>
```

Response(s)

```
OK
ERROR
```

PIN	ASC0	ASC1	MUX1	MUX2	MUX3		Last
-	+	+	+	+	+	-	-

Reference(s)

V.250

Parameter Description

<n>(num)

43	The data value

8. Network Service Commands

The AT Commands described in this chapter are related to various network services. More commands related to this area can be found in Chapter 9., Supplementary Service Commands.

8.1 AT+COPN Read operator names

The AT+COPN command returns the list of operator names from the ME. Each operator code <numericn> that has an alphanumeric equivalent <alphan> in the ME memory is returned. See also: AT^SPLM.

Syntax

Test Command

```
AT+COPN=?
```

Response(s)

```
OK
ERROR
+CME ERROR: <err>
```

Exec Command

```
AT+COPN
```

Response(s)

```
+COPN: <numericn>,<alphan>
[+COPN: ...]
OK
ERROR
+CME ERROR: <err>
```

PIN	ASC0	ASC1	MUX1	MUX2	MUX3		Last
+	+	+	+	+	+	-	-

Reference(s)

GSM 07.07

Parameter Description

<numericn>(str)

Operator in numeric format; GSM location area identification number.

<alphan>(str)

Operator in long alphanumeric format; can contain up to 16 characters.

8.2 AT+COPS Operator Selection

AT+COPS queries the present status of the BGS2-E's network registration and allows to determine whether automatic or manual network selection shall be used. Additional service is available with AT^SOPS.

Three operator selection modes are available:

- Automatic
  BGS2-E searches for the home operator automatically. If successful the BGS2-E registers to the home network. If the home network is not found, BGS2-E goes on searching. If a permitted operator is found, BGS2-E registers to this operator.
  If no operator is found the BGS2-E remains unregistered.
- Manual
  Desired operator can be determined using the AT+COPS write command. If the operator is found, BGS2-E registers to it immediately. If the selected operator is forbidden, the BGS2-E remains unregistered.
- Manual/automatic
  The ME first tries to find the operator determined via AT+COPS write command. If the ME fails to register to this operator, then it starts to select another (permitted) operator automatically.

The AT+COPS test command conists of several parameter sets, each representing an operator present in the network.
Each set contains the following information:

- an integer indicating the availability of the operator,
- long alphanumeric format of the operator's name and
- numeric format representation of the operator.

Any of the parameters may be unavailable and will then be an empty field (,,). The list of operators comes in the following order: Home network, networks referenced in SIM and other networks.
The operator list is followed by a list of the supported <mode>s and <format>s. These lists are delimited from the operator list by two commas.
If the test command is used during an ongoing GPRS transfer, traffic will be interrupted for up to one minute.

The AT+COPS read command returns the current <mode> and the currently selected operator. If no operator is selected, <format> and <opName> are omitted.

The AT+COPS write command forces an attempt to select and register to the GSM network operator (see note below). If the selected operator is not available, no other operator will be selected (except <mode>=4). The selected operator name <format> will apply to further read commands, too.

Command settings are effective over all serial interfaces of the BGS2-E.

Syntax

Test Command

```
AT+COPS=?
```

Response(s)

```
+COPS: [list of present operators (<opStatus>, long alphanumeric <opName>s,,numeric <opName>s ], , (list of supported <mode>s), (list of supported <format>s)
OK
ERROR
+CME ERROR: <err>
```

Read Command

```
AT+COPS?
```

Response(s)

```
+COPS:<mode>[, <format>[, <opName>]]
OK
ERROR
+CME ERROR: <err>
```

Write Command

AT+COPS=<mode>[, <format>[, <opName>]]

Response(s)

OK
ERROR
+CME ERROR: <err>

PIN	ASC0	ASC1	MUX1	MUX2	MUX3		Last
±	+	+	+	+	+	-	-

Reference(s)

GSM 07.07

Parameter Description

<opStatus>(num)

Operator Status

0	Unknown
1	Operator available
2	Current operator
3	Operator forbidden

<opName>(str)(&V)

Operator Name

If test command: Operator name in long alphanumeric format and numeric format.
If read command: Operator name as per <format>.
If write command: Operator name in numeric format.

<mode>(num)(&V)

Parameter values 0 and 1 are stored non-volatile in the BGS2-E.

0(D)	Automatic mode; <opName> field is ignored.
1	Manual operator selection Write command requires <opName> in numeric format, i.e. <format> shall be 2. Read command returns the current <mode> and the currently selected <opName>. If no operator is selected, <format> and <opName> are omitted.
2	Manually deregister from network and remain unregistered until <mode>=0 or 1 or 4 is selected.
3	Set only <format> (for AT+COPS read command).
4	Automatic / manual selection; if manual selection fails, automatic mode (<mode>=0) is entered (<opName> field will be present).

<format>(num)(&W)(&V)

0(&F)	Long alphanumeric format of <opName>. Can be up to 16 characters long.
2	Numeric format of <opName>. This is the GSM Location Area Identification (LAI) number, which consists of the 3-digit Mobile Country Code (MCC) plus the 2- or 3-digit Mobile Network Code (MNC).

Note

- It is not recommended to use the AT+COPS command before passing the CHV (card holder verification) / SIM PIN1 verification. This is because after PIN1 verification the ME will automatically try to register to the network as though AT+COPS were 0, regardless of the settings done before with or without SIM, such as AT+COPS=2 which remains unchanged. Also, the test command should only be used after PIN1 authentication.

8.3 AT^SOPS Extended Operator Selection

AT^SOPS queries the present status of the BGS2-E's network registration. Since basic operator selection services are available with AT+COPS this command uses the methods of the Enhanced Operator Name String (EONS) specification while handling operator name strings. Additional EONS related information is available with AT^SIND.

AT^SOPS test command lists sets of five parameters, each representing an operator present in the network.
A set consists of

1. an integer indicating the availability of the operator,
2. specification of the source of the operator name <eonsOperator>,
3. operator name according to EONS Table,
4. Service Provider Name from the SIM Service Table and
5. numeric format representation of the operator.

Any of the parameters may be unavailable and will then be an empty field (,,).
The list of operators comes in the following order: Home network, networks referenced in SIM and other networks.
If the test command is used during an ongoing GPRS transfer, traffic will be interrupted for up to a minute.

Syntax

Test Command

AT^SOPS=?

Response(s)

^SOPS: [list of present operator(<opStatus>, <eonsType>, <eonsOperator>, <servProvider>, <opName>)s], , (), ()
OK
ERROR
+CME ERROR: <err>

PIN	ASC0	ASC1	MUX1	MUX2	MUX3	Last	
+	+	+	+	+	+	-	-

Reference(s)

Cinterion

Parameter Description

<opStatus>(num)

Status	
0	unknown
1	operator available
2	current operator
3	operator forbidden

<eonsType>(num)

Specification of the source of the operator name <eonsOperator>. Details of EONS-supplied operator name types are available at AT^SIND.

<eonsOperator>(+CSCS)

Operator name; format depends on the source of the operator name, specified by <eonsType>. Can be up to 24 characters long.

`<servProvider>`(str)(+CSCS)

Service Provider Name according to setting of Service No. 17 in the SIM Service Table (EF_{SST}). Can be up to 16 characters long.

`<opName>`

Operator

Operator name in numerical presentation contains the GSM Location Area Identification (LAI) number, which consists of the 3-digit Mobile Country Code (MCC) plus the 2- or 3-digit Mobile Network Code (MNC). Parameter is stored non-volatile to the SIM.

Note

- The `AT^SOPS` Test command is only accepted by the module after a valid pin has been entered.

8.4 AT^SRPN Replace Operator Names

AT^SRPN can be used to add or modify entries of the operator list. Changes will be effective for commands like AT^SPLM, AT+COPN, AT+COPS or AT^SIND (EONS).

The read command returns only the changed entries of the operator list. The write command allows to add a new operator with short and long name, to set the short and long name for a given operator or to restore the original operator names (delete the changed names). Changes are non-volatile and effective immediately.

Syntax

Test Command

```
AT^SRPN=?
```

Response(s)

```
^SRPN:(<maxEntries>), (<usedEntries>)
OK
```

Read Command

```
AT^SRPN?
```

Response(s)

```
[^SRPN: <operator>, <origShortName>, <origLongName>, <updtShortName>, <updtLongName>]
[^SRPN: ...]
OK
ERROR
+CME ERROR: <err>
```

Write Command

```
AT^SRPN=<mode>, <operator>[, <updtShortName>, <updtLongName>]
```

Response(s)

```
OK
ERROR
+CME ERROR: <err>
```

PIN	ASC0	ASC1	MUX1	MUX2	MUX3		Last
-	+	+	+	+	+	-	-

Parameter Description

<mode>(num)

0	Restore the original short and long names of the specified operator or delete an operator previously added with AT^SRPN. The parameter <operator> is mandatory, parameters <updtShortName> and <updtLongName> are ignored.
1	Set short and long operator names for the specified operator. Creates a new entry if the specified operator was not yet listed. The parameters <operator>, <updtShortName> and <updtLongName> are mandatory. Changes are non-volatile.

<operator>(str)

The GSM Location Area Identification (LAI) number, which consists of the 3-digit Mobile Country Code (MCC) plus the 2- or 3-digit Mobile Network Code (MNC).

<origShortName>(str)

Original short alphanumeric operator name. Can be up to 8 characters long. If the operator is not part of the original provider list, then <origShortName> is empty.

<origLongName>(str)

Original long alphanumeric operator name. Can be up to 16 characters long. If the operator is not part of the original provider list, then <origLongName> is empty.

<updtShortName>(str)

Updated short alphanumeric operator name. Can be up to 8 characters long.

<updtLongName>(str)

Updated long alphanumeric operator name. Can be up to 16 characters long.

<maxEntries>(num)

50	Maximum number of operator list entries which can be added or modified.

<usedEntries>(num)

0(D)...50	Number of currently added or modified operator list entries.

8.5 AT+CREG Network registration

The AT+CREG command serves to verify the network registration status of the ME. For this purpose two types of URCs are available.
The AT+CREG read command returns the URC presentation mode <n> and an integer <stat> that shows the registration status of the ME. The location information elements <lac> and <ci> are returned only when <n>=2 and ME is registered to the network.

Syntax

Test Command

```
AT+CREG=?
```

Response(s)

```
+CREG: (list of supported<n>s)
OK
```

Read Command

```
AT+CREG?
```

Response(s)

```
+CREG: <n>, <stat>[, <lac>, <ci>]
OK
ERROR
+CME ERROR: <err>
```

Write Command

```
AT+CREG=[<n>]
```

Response(s)

```
OK
ERROR
+CME ERROR: <err>
```

PIN	ASC0	ASC1	MUX1	MUX2	MUX3		Last
-	+	+	+	+	+	-	-

Reference(s)

GSM 07.07

Unsolicited Result Codes

URC 1

If <n>=1 and there is a change in the ME network registration status:

```
+CREG: <stat>
```

URC 2

If <n>=2 and there is a change in the ME network registration status or a change of the network cell:

```
+CREG: <stat>[, <lac>, <ci>]
```

Parameter Description

<n>(num)(&W)(&V)	
[0](&F)	Disable +CREG URC
1	Enable URC +CREG:<stat> to report status of network registration
2	Enable URC +CREG:<stat>[,<lac>,<ci>] to report status of network registration including location information. The optional parameters <lac> and <ci> will not be updated during calls.

<stat>(num)(&V)	
0	Not registered, ME is currently not searching for new operator There is a technical problem. User intervention is required. Yet, emergency calls can be made if any network is available. Probable causes: • no SIM card available • no PIN entered • no valid Home PLMN entry found on the SIM
1	Registered to home network
2	Not registered, but ME is currently searching for a new operator The ME searches for an available network. Failure to log in until after more than a minute may be due to one of the following reasons: • No network available or insufficient Rx level. • The ME has no access rights to the networks available. • Networks from the SIM list of allowed networks are around, but login fails due to one of the following reasons: - #11 ... PLMN not allowed - #12 ... Location area not allowed - #13 ... Roaming not allowed in this location area After this, the search will be resumed (if automatic network search is enabled). • The Home PLMN or an allowed PLMN is available, but login is rejected by the cell (reasons: Access Class or LAC). If at least one network is available, emergency calls can be made.
3	Registration denied • If automatic network search is enabled: Authentication or registration fails after Location Update Reject due to one of the following reasons: - #2 ... IMSI unknown at HLR - #3 ... Illegal MS - #6 ... Illegal ME Either the SIM or the MS or the ME are unable to log into any network. User intervention is required. Emergency calls can be made, if any network is available. • Only if manual network search is enabled: Manual registration fails after Location Update Reject due to the following reasons: - #2 ... IMSI unknown at HLR - #3 ... Illegal MS - #6 ... Illegal ME - #11 ... PLMN not allowed - #12 ... Location area not allowed - #13 ... Roaming not allowed in this location area No further attempt is made to search or log into a network. Emergency calls can be made if any network is available.
4	Unknown (not used)
5	Registered, roaming The ME is registered at a foreign network (national or international network)

`<lac>`(str)

Two byte location area code in hexadecimal format (e.g. "00C3" equals 193 in decimal).

`<ci>`(str)

Two byte cell ID in hexadecimal format.

Example

`AT+CREG=2`	Activates extended URC mode.
`OK`	
`AT+COPS=0`	Forces ME to automatically search network operator.
`OK`	
`+CREG: 2`	URC reports that ME is currently searching.
`+CREG: 1,"0145","291A"`	URC reports that operator has been found.

8.6 AT+CSQ Signal quality

The AT+CSQ execute command indicates the received signal strength <rssi> and the channel bit error rate <ber>.

Syntax

Test Command

AT+CSQ=?

Response(s)

+CSQ: (list of supported<rssi>s), (list of supported<ber>s)
OK

Exec Command

AT+CSQ

Response(s)

+CSQ: <rssi>,<ber>
OK

PIN	ASC0	ASC1	MUX1	MUX2	MUX3		Last
-	+	+	+	+	+	-	-

Reference(s)

GSM 07.07

Parameter Description

<rssi>(num)

0	-113 dBm or less
1	-111 dBm
2..30	-109... -53 dBm
31	-51 dBm or greater
99	not known or not detectable

<ber>(num)

To check the bit error rate there must be a call in progress to obtain realistic values. If no call is set up, there is no BER to be determined. In this case the indicated value may be 0 or 99, depending on the SIM card.

0..7	as RXQUAL values in the table in GSM 05.08 section 8.2.4.
99	not known or not detectable

Note

- After using network related commands such as AT+CCWA, AT+CCFC, AT+CLCK, users are advised to wait 3s before entering AT+CSQ. This is recommended to be sure that any network access required for the preceding command has finished.

8.7 AT^SMONC Cell Monitoring

The AT^SMONC execute command delivers cell information containing 9 values from a maximum of 7 base stations. The first base station is the serving cell.

Syntax

Test Command

AT^SMONC=?

Response(s)

OK
ERROR
+CME ERROR: <err>

Exec Command

AT^SMONC

Response(s)

^SMONC:<MCC>$_1$, <MNC>$_1$, <LAC>$_1$, <cell>$_1$, <BSIC>$_1$, <chann>$_1$, <RSSI>$_1$, <C1>$_1$, <C2>$_1$, <MCC>$_2$, <MNC>$_2$, <LAC>$_2$, <cell>$_2$, <BSIC>$_2$, <chann>$_2$, <RSSI>$_2$, <C1>$_2$, <C2>$_2$, ...
OK
ERROR
+CME ERROR: <err>

PIN	ASC0	ASC1	MUX1	MUX2	MUX3		Last
+	+	+	+	+	+	-	-

Reference(s)

3GPP TS 05.08

Parameter Description

<MCC>(num)

Mobile country code
3 digits, e.g. 232

000	Not decoded

<MNC>(num)

Mobile network code
2 digits or 3 digits, e.g. 07 or 003

000	Not decoded

<LAC>(num)

Location area code
4 hexadecimal digits, e.g. 4EED

0000	Not decoded

<cell>(num)

Cell identifier
4 hexadecimal digits, e.g. 4EAF

0000	Not decoded

<BSIC>(num)

Base station identity code

2 digits, e.g. 32

00	Not decoded

<chann>(num)

ARFCN (Absolute Frequency Channel Number)

0	Not decoded. In this case, all remaining parameters related to the same channel are neither decoded. For example, a non-existing cell appears as follows: 000,000,0000,0000,00,0,0,-,-

<RSSI>(num)

Received signal level of the BCCH carrier (0..63). The indicated value is composed of the measured value in dBm plus an offset. This is in accordance with a formula specified in 3GPP TS 05.08

<C1>(num)

Coefficient for base station reselection, e.g. 30. In dedicated mode, under certain conditions the parameter cannot be updated. In such cases a '-' is presented.

<C2>(num)

Coefficient for base station reselection, e.g. 30. In dedicated mode, under certain conditions the parameter cannot be updated. In such cases a '-' is presented.

Note

- To some extent, the cell monitoring commands AT^MONI, AT^MONP and AT^SMONC cover the same parameters. The receiving level, for example, can be queried with all three commands. Yet the resulting values may be slightly different, even though obtained over a time period of a few seconds. This is quite normal and nothing to worry about, as the cell information is permanently updated.

8.8 AT^SMOND Cell Monitoring

The AT^SMOND execute command can be used to obtain status information of the service cell and up to six neighbour cells. The advantage over other cell monitoring commands is that AT^SMOND delivers more detailed information about the received signal strength.

Syntax

Test Command

```
AT^SMOND=?
```

Response(s)

```
OK
ERROR
+CME ERROR: <err>
```

Exec Command

```
AT^SMOND
```

Response(s)

```
^SMOND:[<sci>][, <nci>][, <TA>][, <rssiber>]
OK
ERROR
+CME ERROR: <err>
```

PIN	ASC0	ASC1	MUX1	MUX2	MUX3		Last
+	+	+	+	+	+	-	-

Reference(s)

3GPP TS 05.08

Parameter Description

<sci>(str)

Serving cell information (comma-separated, no cr/lf included)

<MCC>,<MNC>,<LAC>,<cell>,<BSIC>,<chann>,<RxLev>,<RxLev>Full,<RxLev>Sub,<RxQual>,<RxQual>Full,<RxQual>Sub,<Timeslot>
If no serving cell is found, unavailable values are omitted:" ,,,,,,<RxLev>,,,0,,,0"

<nci>(str)

Neighbour cell information for neighbour cell 1 through 6 (comma-separated, no cr/lf included)

$<MCC>_1$,$<MNC>_1$,$<LAC>_1$,$<cell>_1$,$<BSIC>_1$,$<chann>_1$,$<RxLev>_1$, (these parameters repeated for neighbour cells 2 through 6 with no CR/LF): ... $<MCC>_6$,$<MNC>_6$,$<LAC>_6$,$<cell>_6$,$<BSIC>_6$,$<chann>_6$,$<RxLev>_6$
An unavailable cell appears as follows: " ,,,,,,0"

<rssiber>(str)

Values for RSSI and BER (comma-separated, no cr/lf included)

<RSSI>,<BER>

<MCC>(num)

Mobile country code

3 digits, e.g. 232

000	Not decoded

<MNC>(num)

Mobile network code

2 digits or 3 digits, e.g. 07 or 003

000	Not decoded

<LAC>(num)

Location area code

4 hexadecimal digits, e.g. 4EED

0000	Not decoded

<cell>(num)

Cell identifier

4 hexadecimal digits, e.g. 4EAF

0000	Not decoded

<BSIC>(num)

Base station identity code

2 digits, e.g. 32

00	Not decoded

<chann>(num)

ARFCN (Absolute Frequency Channel Number)

<RxLev>(num)

Received signal level in dBm

<RxQual>(num)

Received signal quality as defined in GSM05.08

<Timeslot>(num)

Assigned timeslot. If mobile is in idle mode, timeslot 0 (BCCH timeslot) will be indicated.

0...8	Assigned timeslot

<TA>(num)

Timing advance for the serving cell, in bits.

<RSSI>(num)

Receive Level, with value 99 indicating "not known or not detectable"

0...31	Signifies the RSSI range from -113dBm or less ("0") to -51dBm or greater ("31") in steps of -2dBm (e.g. "1" = -111 dBm, "2" = -109 dBm ..., "30" = -53dBm)

<BER>(num)

Bit Error rate, with value 99 indicating "not known or not detectable"

0...7	as RXQUAL values RXQUAL0 to RXQUAL7 in GSM 05.08 section 8.2.4

Notes

- To some extent, the cell monitoring commands AT^SMOND, AT^MONI, AT^MONP and AT^SMONC cover the same parameters. The receiving level, for example, can be queried with all three commands. Yet the resulting values may be slightly different, even though obtained over a time period of a few seconds. This is quite normal and nothing to worry about, as the cell information is permanently updated.
- During a connection, not all of the neighbour cell information can be decoded. The following restrictions apply:
  - Information is updated only for neighbour cells that have already been visible at connection setup, and continue to be included in the list of cells.
  - New neighbour cells added to the list, for example after handover, cannot be displayed until the connection is released.

Example

`at^smond`	Execute command

`^SMOND:262,01,3008,6060,32,100,66,,,0,,,0,`
`262,01,3008,DDD1,35,92,80,`
`262,01,3008,,31,96,83,`
`262,01,3008,BFBE,35,27,86,`
`262,01,3008,,32,98,88,`
`262,01,3008,BB44,32,90,89,`
`262,01,3008,8307,31,22,93,`
`2,23,99`
	Line breaks inserted for readability in print

8.9 AT^MONI Monitor idle mode and dedicated mode

The AT^MONI command supplies information of the serving/dedicated cell. There are two ways to retrieve the information: once on request by using the execute command or automatically every <period> seconds by using the write command. To stop the periodic presentation type "AT" or "at".

Syntax

Test Command

AT^MONI=?

Response(s)

^MONI: (list of supported <period>s)
OK

Exec Command

AT^MONI

Response(s)

See: Section 8.9.1, AT^MONI responses
OK

Write Command

AT^MONI=<period>

Response(s)

See: Section 8.9.1, AT^MONI responses
OK
ERROR
+CME ERROR: <err>

PIN	ASC0	ASC1	MUX1	MUX2	MUX3		Last
-	+	+	+	+	+	-	-

Parameter Description

<period>(num)

Display period in seconds

1...254

Notes

- The two header lines (see Section 8.9.1, AT^MONI responses) are output after every ten data lines.
- The length of following output lines exceeds 80 characters. Therefore a terminal program may draw a carriage return on a screen. However, this is not part of the response.
- The parameters LAC and cell are presented as hexadecimal digits, the remaining parameters are composed of decimal digits.
- If the radio cell changes during a connection, the parameters PWR, RXLev and C1 of the 'Serving Cell' part cannot be updated under certain conditions.
- If the BS supports frequency hopping during a connection, the dedicated channel (parameter chann) is not stable. This mode is indicated by chann = 'h'.
- To some extent, the cell monitoring command AT^SMONC covers the same parameters. The receiving level, for example, can be queried with both commands. Yet the resulting values may be slightly different, even though obtained over a time period of a few seconds. This is quite normal and nothing to worry about, as the cell information is permanently updated.
- For compatibility with earlier products and to support legacy applications, any input character may be used to stop the output in certain cases (depending on the settings of AT+IPR and AT+CMUX).

8.9.1 AT^MONI responses

ME is not connected:
a) ME is camping on a cell and registered to the network:

```
Serving Cell                                          I Dedicated channel
chann rs  dBm  MCC MNC  LAC cell NCC BCC PWR RXLev  C1 I chann TS timAdv PWR  dBm Q ChMod
1013  21  -71  001  01 1001 0103   7   7  33  -105  33 I    No connection
```

b) ME is camping on a cell but not registered to the network (only emergency call allowed):

```
Serving Cell                                          I Dedicated channel
chann rs  dBm  MCC MNC  LAC cell NCC BCC PWR RXLev  C1 I chann TS timAdv PWR  dBm Q ChMod
1013  21  -71  001  01 1001 0103   7   7  33  -105  33 I    Limited Service
```

c) ME camping on a cell, but searching for a better cell (cell reselection):

```
Serving Cell                                          I Dedicated channel
chann rs  dBm  MCC MNC  LAC cell NCC BCC PWR RXLev  C1 I chann TS timAdv PWR  dBm Q ChMod
1013  21  -71  001  01 1001 0103   7   7  33  -105  33 I    Cell Reselection
```

d) ME is searching and could not (yet) find a suitable cell:

```
Serving Cell                                          I Dedicated channel
chann rs  dBm  MCC MNC  LAC cell NCC BCC PWR RXLev  C1 I chann TS timAdv PWR  dBm Q ChMod
Searching
```

ME is connected (Call in progress):

```
Serving Cell                                          I Dedicated channel
chann rs  dBm  MCC MNC  LAC cell NCC BCC PWR RXLev  C1 I chann TS timAdv PWR  dBm Q ChMod
1013  19  -76  001  01 1001 0103   7   7  33  -105  33 I 1015   1      0   5  -76 0 S_HR
```

Columns for Serving Cell:

Column	Description
chann	ARFCN (Absolute Frequency Channel Number) of the BCCH carrier
rs	RSSI value 0 - 63 (RSSI = Received signal strength indication)
dBm	Receiving level of the BCCH carrier in dBm
MCC	Mobile Country Code (first part of the PLMN code)
MNC	Mobile Network Code (second part of the PLMN code)
LAC	Location area code, see note
cell	Cell ID
NCC	PLMN colour code
BCC	Base station colour code
PWR	Maximal power level used on RACH channel in dBm
RXLev	Minimal receiving level (in dBm) to allow registration
C1	Coefficient for base station selection

Columns for Dedicated channel:

Column	Description
chann	ARFCN (Absolute Frequency Channel Number) of the TCH carrier Note: <chann> = H or H850 or H900 or H18 or H19 indicate frequency hopping.
TS	Timeslot number

Column	Description
timAdv	Timing advance in bits
PWR	Current power level
dBm	Receiving level of the traffic channel carrier in dBm
Q	Receiving quality (0-7)
ChMod	Channel mode (--: Signalling, S_HR: Half rate, S_FR: Full rate, S_EFR: Enhanced Full Rate, A_HR: AMR Half rate, A_FR: AMR Full rate)

8.9.2 Service states

Depending on the service state, an additional textual output is generated (refer also to the response examples):

- 'Searching' - The MS is searching, but could not (yet) find a suitable cell. This output appears after restart of the MS or after loss of coverage.
- 'No connection' - The MS is camping on a cell and registered to the network. The service state is 'idle', i.e. there is no connection established or a dedicated channel in use.
- 'Cell Reselection' - The MS has not yet lost coverage but is searching for a better cell, since the cell reselection criterion is fulfilled.
- 'Limited Service' - The MS is camping on a cell but not registered to the network. Only emergency calls are allowed. The MS enters this state, for example, when
  - no SIM card is inserted, or PIN has not been given,
  - neither Home PLMN nor any other allowed PLMN are found,
  - registration request was not answered or denied by the network (use command AT+CREG to query the registration status),
  - authentication failed.

8.10 AT^MONP Monitor neighbor cells

The AT^MONP supplies information of up to six neighbor cells. There are two ways to retrieve the information: once on request by using the execute command or automatically every <period> seconds by using the write command. To stop the periodic presentation type "AT" or "at".

Syntax

Test Command

AT^MONP=?

Response(s)

^MONP: (list of supported <period>s)
OK

Exec Command

AT^MONP

Response(s)

See: Section 8.10.1, AT^MONP responses
OK

Write Command

AT^MONP=<period>

Response(s)

See: Section 8.10.1, AT^MONP responses
OK
ERROR
+CME ERROR: <err>

PIN	ASC0	ASC1	MUX1	MUX2	MUX3		Last
-	+	+	+	+	+	-	-

Parameter Description

<period>(num)

Display period in seconds

1...254

Notes

- Due to the fact that not all necessary information of the neighbor cells can be decoded during a connection, there are several constraints to be considered:
  - Only neighbor cells that have already been visible in IDLE mode will be further updated, as long as they are still included in the list.
  - Though new neighbor cells can be added to the list (e.g. due to handover), their C1 and C2 parameters cannot be displayed until the connection is released. In this case "-" will be presented for C1 and C2.
- To some extent, the cell monitoring command AT^SMONC covers the same parameters. The receiving level, for example, can be queried with both commands. Yet the resulting values may be slightly different, even though obtained over a time period of a few seconds. This is quite normal and nothing to worry about, as the cell information is permanently updated.
- For compatibility with earlier products and to support legacy applications, any input character may be used to stop the output in certain cases (depending on the settings of AT+IPR and AT+CMUX).

8.10.1 AT^MONP responses

Response of AT^MONP (Example):

```
chann rs  dBm MCC MNC BCC  C1  C2
 653  26  -84 262  07   0  22  22
 660  20  -90 262  07   3  16  16
 687  19  -91 262  07   1  15  15
 678  14  -96 262  07   3  10  10
 671  14  -96 262  07   1  10  10
 643  10 -100 262  07   7   6   6
```

Column	Description
Chann	ARFCN (Absolute Radio Frequency Channel Number) of the BCCH carrier
rs	RSSI value 0 - 63 (RSSI = Received signal strength indication)
dBm	Receiving level in dBm
MCC	Mobile Country Code (first part of the PLMN code)
MNC	Mobile Network Code (second part of the PLMN code)
BCC	Base Station colour code
C1	cell selection criterion
C2	cell reselection criterion

8.11 AT^SMONG Packet Data Monitor

The AT^SMONG command supplies packet data specific cell information. There are two ways to retrieve the information: once on request by using the execute command or automatically every <period> seconds by using the write command. To stop the periodic presentation type "AT" or "at".

Syntax

Test Command

AT^SMONG=?

Response(s)

^SMONG: (list of supported <table>s), (list of supported <period>s)
OK
ERROR
+CME ERROR: <err>

Exec Command

AT^SMONG

Response(s)

GPRS Monitor
Cell Info Table (see: Section 8.11.1, AT^SMONG Cell Info Table)
OK
ERROR
+CME ERROR: <err>

Write Command

AT^SMONG=<table>[, <period>]

Response(s)

^SMONG: GPRS Monitor
Cell Info Table (see: Section 8.11.1, AT^SMONG Cell Info Table)
OK
ERROR
+CME ERROR: <err>

PIN	ASC0	ASC1	MUX1	MUX2	MUX3	🔔	Last
+	+	+	+	+	+	-	-

Parameter Description

<table>(num)

1	Cell Info Table

<period>(num)

Display period in seconds
If <period> is omitted the cell data will be presented only once on a single line (as if Execute command was issued).
If <period> is given, the cell data will be listed repeatedly on 10 data lines. Every 10th data line is followed by the header, simply to repeat the column titles.

1...100

Note

- For compatibility with earlier products and to support legacy applications, often any input character will stop the periodic output of the write command. But since this applies only in certain cases (depending on the settings of AT+IPR and AT+CMUX), it is recommended to always use "at" or "AT".

8.11.1 AT^SMONG Cell Info Table

Example output for AT^SMONG:

```
GPRS Monitor
BCCH  G  PBCCH  PAT MCC  MNC  NOM  TA      RAC          # Cell  #
0637  1  -      4   234  05   2    00      0B
```

Columns of the cell info table:

Column	Description
BCCH	ARFCN of BCCH carrier.
G	GPRS status: 0 GPRS not available in currently used cell 1 GPRS available in currently used cell 2 GPRS attached
PBCCH	If PBCCH is present, indication of ARFCN, else "-" or if Frequency Hopping is used "H"
PAT	Priority Access Threshold (GSM Rec. 04.08 / 10.5.2.37b) 0 Packet access is not allowed in the cell 1 Spare, shall be interpreted as "000" (packet access not allowed) 2 Spare, shall be interpreted as "000" (packet access not allowed) 3 Packet access is allowed for priority level 1 4 Packet access is allowed for priority level 1 to 2
MCC	Mobile Country Code
MNC	Mobile Network Code
NOM	Network Operation Mode (1...3)
TA	Timing Advance Value
RAC	Routing Area Code (as hexadecimal value)

8.12 AT^SALS Alternate Line Service

The AT^SALS command is designed to support Alternate Line Service. This allows the subscriber to use two voice numbers on the same SIM card (service requires a dual line SIM card).
The write command enables or disables the presentation of <view> and specifies the <line> used for outgoing calls. The read command returns the presentation mode of <view> and the currently selected <line>.

Syntax

Test Command

AT^SALS=?

Response(s)

^SALS: (list of supported <view>s), (list of supported <line>s)
OK

Read Command

AT^SALS?

Response(s)

^SALS: <view>, <line>
OK
ERROR

Write Command

AT^SALS=<view>[, <line>]

Response(s)

OK
ERROR

PIN	ASC0	ASC1	MUX1	MUX2	MUX3	🔔	Last
+	+	+	+	+	+	-	-

Unsolicited Result Code

If switched on with <view>=1:

^SALS: <line>

Indicates the line used by an incoming call.

Parameter Description

<view>(num)

Controls the presentation mode of the URC "^SALS" which indicates the line number used by an incoming call:

0(&F)(P)	Disables indication of the called line
1	Enables indication of the called line

<line>(num)

Selects the line to be used for outgoing calls. Setting is global for the ME and non volatile.

1(&F)(D)	ALS Line 1
2	ALS Line 2

Note

- If a non ALS SIM is inserted, the <line> will be reset to line 1.

Example

AT^SALS=1,1 RING ^SALS: 2	Line 1 has been selected for outgoing calls. "^SALS" URC is enabled. You receive a notification that you have an incoming call on line 2.

8.13 AT^SHOM Display Homezone

The AT^SHOM returns the homezone state. The result is valid only, if network registration state <stat> is 1 (registered) (see AT+CREG).
The feature is available only for supported network operators (Viag, One2One, Orange and LCI) and requires a suitable SIM card. If the homezone feature is not supported by the network operator or SIM card, result is always 0.

Syntax

Test Command

```
AT^SHOM=?
```

Response(s)

```
OK
```

Exec Command

```
AT^SHOM
```

Response(s)

```
^SHOM: <homezonestate>
OK
ERROR
+CME ERROR: <err>
```

PIN	ASC0	ASC1	MUX1	MUX2	MUX3		Last
+	+	+	+	+	+	-	-

Parameter Description

<homezonestate>(num)	
0	ME is out of Homezone
1	ME is within the Homezone

8.14 AT^SPLM Read the PLMN list

The AT^SPLM execute command returns the list of operators from the ME. Each operator code <numeric> that has an alphanumeric equivalent <alpha> in the ME memory is returned. The list is sorted by operator codes, but operators newly added by AT^SRPN are always listed last. See also GSM 07.07: AT+COPN, AT+COPS

Syntax

Test Command

```
AT^SPLM=?
```

Response(s)

```
OK
```
If error is related to ME functionality:
```
ERROR
+CME ERROR: <err>
```

Exec Command

```
AT^SPLM
```

Response(s)

```
^SPLM: <numeric>,<alpha>
[^SPLM: ...]
OK
```
If error is related to ME functionality:
```
ERROR
+CME ERROR: <err>
```

PIN	ASC0	ASC1	MUX1	MUX2	MUX3		Last
+	+	+	+	+	+	-	-

Reference(s)

GSM 07.07

Parameter Description

<numeric>(str)

Operator in numeric form; GSM location area identification number

<alpha>(str)

Operator in long alphanumeric format; can contain up to 16 characters

8.15 AT+CPOL Preferred Operator List

AT+CPOL read command queries the list of the preferred operators.
AT+CPOL write command allows to edit the list of the preferred operators.
If <index> is given but <operator> is left out, the entry is deleted.

Syntax

Test Command

```
AT+CPOL=?
```

Response(s)

```
+CPOL:(list of supported <index>s), (list of supported <format>s)
OK
ERROR
+CME ERROR: <err>
```

Read Command

```
AT+CPOL?
```

Response(s)

```
+CPOL: <index>, <format>, <operator>
+CPOL: ...
OK
ERROR
+CME ERROR: <err>
```

Write Command

```
AT+CPOL=<index>[, <format>, <operator>]
```

Response(s)

```
OK
ERROR
+CME ERROR: <err>
```

PIN	ASC0	ASC1	MUX1	MUX2	MUX3		Last
+	+	+	+	+	+	-	-

Reference(s)

GSM 07.07

Parameter Description

<index>(num)

The order number of the operator in the SIM preferred operator list.

<format>(num)

2	Numeric format

<operator>(str)

Operator in numeric format (GSM Location Area Identification number which consists of a 3-digit country code plus a 2- or 3-digit network code).

8.16 AT^SPLR Read entry from the preferred operators list

The AT^SPLR write command returns used entries from the SIM list of preferred operators with <index> between <index1> and <index2>. If <index2> is not given, only entry at <index1> is returned. The test command returns the whole index range supported by the SIM.
See also GSM 07.07: AT+CPOL

Syntax

Test Command

```
AT^SPLR=?
```

Response(s)

```
^SPLR:(list of supported <index>s)
OK
ERROR
+CME ERROR: <err>
```

Write Command

```
AT^SPLR=<index1>[, <index2>]
```

Response(s)

```
^SPLR: <index1>, <oper>
[^SPLR: <index2>, <oper>]
[^SPLR: ...]
OK
ERROR
+CME ERROR: <err>
```

PIN	ASC0	ASC1	MUX1	MUX2	MUX3		Last
+	+	+	+	+	+	-	-

Reference(s)

Cinterion

Parameter Description

<index1>(num)

Location number to start reading from

<index2>(num)

Location number where to stop reading

<index>(num)

Index range supported by the SIM card (between <index1> and <index2>)

<oper>(str)

Operator in numeric form; GSM location area identification number

8.17 AT^SPLW Write an entry to the preferred operators list

The AT^SPLW write command writes an entry to the SIM list of preferred operators at location number <index>. If <index> is given but <oper> is left out, the entry is deleted. An operator can be only once in the list. Test command returns the whole index range supported by the SIM.
See also GSM 07.07: AT+CPOL

Syntax

Test Command

```
AT^SPLW=?
```

Response(s)

```
^SPLW:(list of supported) <index>s
OK
ERROR
+CME ERROR: <err>
```

Write Command

```
AT^SPLW=<index>[, <oper>]
```

Response(s)

```
OK
ERROR
+CME ERROR: <err>
```

PIN	ASC0	ASC1	MUX1	MUX2	MUX3		Last
+	+	+	+	+	+	-	-

Parameter Description

<index>(num)

location number

<oper>(str)

Operator in numeric format (GSM Location Area Identification number which consists of a 3-digit country code plus a 2- or 3-digit network code).

8.18 AT^SPCL Set Preferred Cell List

AT^SPCL can be used to specify a list of cells the ME shall preferably register to. The list may contain up to 8 pairs of location area code and cell ID. The list is stored non-volatile.

If a preferred cell list is available the ME will try to register to one of the listed cells, regardless of signal strength and quality. If more than one of the listed cells is visible on the air interface, the one with the best signal strength and quality is chosen to register to. If none of the listed cells is currently visible on the air interface, the normal cell selection mechanism applies.

Preferred cell registration works only in the home PLMN.

If the list is written with less than 8 elements then all other elements remain unchanged.

Syntax

Test Command

AT^SPCL=?

Response(s)

OK

Read Command

AT^SPCL?

Response(s)

^SPCL: <status>
OK
ERROR
+CME ERROR: <err>

Write Command

To specify the list:

AT^SPCL=[<LAC>$_1$, <cell>$_1$[, <LAC>$_2$, <cell>$_2$[, <LAC>$_3$, <cell>$_3$[, <LAC>$_4$, <cell>$_4$[, <LAC>$_5$, <cell>$_5$[, <LAC>$_6$, <cell>$_6$[, <LAC>$_7$, <cell>$_7$[, <LAC>$_8$, <cell>$_8$]]]]]]]]

Response(s)

OK
ERROR
+CME ERROR: <err>

Write Command

To erase the list:

AT^SPCL=0

Response(s)

OK
ERROR
+CME ERROR: <err>

PIN	ASC0	ASC1	MUX1	MUX2	MUX3	Last
-	+	+	+	+	+	-	-

Unsolicited Result Code

The following URC is available as long as the preferred cell registration feature is enabled, i.e., as long as a preferred cell list is configured. After erasing the list with AT^SPCL=0 the URC is no longer generated.

^SPCL: <status>

The URC indicates whether the ME has registered to one of the listed cells or has lost registration to a listed cell.

Parameter Description

<LAC>(str)

Two byte location area code in hexadecimal format (e.g. "3008" equals 12296 in decimal).

<cell>(str)

Two byte cell ID in hexadecimal format (e.g. "77D5" equals 30677 in decimal).

<status>(num)	
0	Not registered to a listed preferred cell. Normal cell selection applies.
1	Registered to a listed preferred cell.

Note

- URC "^SPCL: 1" is only generated as long as the ME is registered to the home network and the current serving cell is recorded in the preferred cell list.

9. Supplementary Service Commands

The AT Commands described in this chapter are related to the Supplementary Services offered by the GSM network.

9.1 AT+CACM Accumulated call meter (ACM) reset or query

Syntax

Test Command

```
AT+CACM=?
```

Response(s)

```
OK
```

Read Command

```
AT+CACM?
```

Response(s)

```
+CACM: <acm>
OK
ERROR
+CME ERROR: <err>
```

Write Command

```
AT+CACM=[<passwd>]
```

Response(s)

```
OK
ERROR
+CME ERROR: <err>
```

PIN	ASC0	ASC1	MUX1	MUX2	MUX3		Last
+	+	+	+	+	+	-	-

Reference(s)

GSM 07.07

Command Description

The read command returns the current ACM value.

The write command resets the Advice of Charge related to the accumulated call meter (ACM) value in SIM file EF(ACM). ACM contains the total number of home units for both the current and preceding calls.

Parameter Description

`<acm>`(str)

Three bytes of the current ACM value in hexadecimal format (e.g. "00001E" indicates decimal value 30) 000000 - FFFFFF.

`<passwd>`(str)

SIM PIN2

9.2 AT^SACM Advice of charge and query of ACM and ACMmax

Syntax

Test Command

```
AT^SACM=?
```

Response(s)

```
^SACM:(list of supported <n>s)
OK
```

Exec Command

```
AT^SACM
```

Response(s)

```
^SACM: <n>,<acm>,<acmMax>
OK
ERROR
+CME ERROR: <err>
```

Write Command

```
AT^SACM=<n>
```

Response(s)

```
OK
ERROR
+CME ERROR: <err>
```

PIN	ASC0	ASC1	MUX1	MUX2	MUX3	Last	
+	+	+	+	+	+	-	-

Unsolicited Result Code

```
+CCCM: <ccm>
```

When activated, an unsolicited result code is sent when the CCM value changes, but not more often than every 10 seconds.

Command Description

The execute command can be used to query the current mode of the Advice of Charge supplementary service, the SIM values of the accumulated call meter (ACM) and accumulated call meter maximum (ACMmax).

The write command enables or disables the presentation of unsolicited result codes to report the call charges.

Parameter Description

<n>(num)(&W)(&V)

[0](&F)	suppress unsolicited result code
1	display unsolicited result code

<acm>(str)(&V)

Three bytes of the current ACM value in hexadecimal format (e.g. "00001E" indicates decimal value 30) 000000-FFFFFF

<acmMax>(str)(&V)

Three bytes of the max. ACM value in hexadecimal format (e.g. "00001E" indicates decimal value 30) 000000 disable ACMmax feature 000001-FFFFFF

<ccm>(str)
Three bytes of the current CCM value in hexadecimal format (e.g. "00001E" indicates decimal value 30); bytes are coded in the same way as ACMmax value in the SIM 000000-FFFFFF

Notes

- When you power down or reset the ME with AT+CFUN=1,1 the URC presentation mode will be reset to its default. To benefit from the URC it is recommended to have the setting included in the user profile saved with AT&W, or to select <n>=1 every time you reboot the ME.
- See also GSM07.07: AT+CACM, AT+CAMM, AT+CAOC.

9.3 AT+CAMM Accumulated call meter maximum (ACMmax) set or query

Syntax

Test Command
AT+CAMM=?
Response(s)
OK

Read Command
AT+CAMM?
Response(s)
+CAMM: <acmmax> OK ERROR +CME ERROR: <err>

Write Command
AT+CAMM=<acmmax>[, <passwd>]
Response(s)
OK ERROR +CME ERROR: <err>

PIN	ASC0	ASC1	MUX1	MUX2	MUX3		Last
+	+	+	+	+	+	-	-

Reference(s)

GSM 07.07

Command Description

The read command returns the current ACMmax value.

The write command sets the Advice of Charge related to the accumulated call meter maximum value in SIM file EF (ACMmax). ACMmax contains the maximum number of home units allowed to be consumed by the subscriber.

Parameter Description

<acmmax>(str)

Three bytes of the max. ACM value in hexadecimal format (e.g. "00001E" indicates decimal value 30) 000000 disable ACMmax feature 000001-FFFFFF.

<passwd>(str)

SIM PIN2

9.4 AT+CAOC Advice of Charge information

Syntax

Test Command

AT+CAOC=?

Response(s)

+CAOC: (list of supported<mode>s)
OK

Read Command

AT+CAOC?

Response(s)

+CAOC: <mode>
OK

Exec Command

AT+CAOC

Response(s)

ERROR
+CME ERROR: <err>
If <mode>=0, TA returns the current call meter value:
+CAOC: <ccm>
OK

Write Command

AT+CAOC=[<mode>]

Response(s)

ERROR
+CME ERROR: <err>
OK

PIN	ASC0	ASC1	MUX1	MUX2	MUX3		Last
+	+	+	+	+	+	-	-

Reference(s)

GSM 07.07

Command Description

Execute command returns the current call meter value.

The write command sets the Advice of Charge supplementary service function mode.

Parameter Description

<mode>(num)(&V)

0	query CCM value

<ccm>(str)

Three bytes of the current CCM value in hexadecimal format (e.g. "00001E" indicates decimal value 30); bytes are similarly coded as ACMmax value in the SIM 000000-FFFFFF.

9.5 AT+CCUG Closed User Group

Syntax

Test Command

AT+CCUG=?

Response(s)

list of supported <n>, range of supported <index>, range of supported <info>
OK
ERROR
+CME ERROR: <err>

Read Command

AT+CCUG?

Response(s)

+CCUG:<n>, <index>, <info>
OK
ERROR
+CME ERROR: <err>

Write Command

AT+CCUG=[[<n>][, <index>][, <info>]]

Response(s)

OK
ERROR
+CME ERROR: <err>

PIN	ASC0	ASC1	MUX1	MUX2	MUX3		Last
+	+	+	+	+	+	-	-

Reference(s)

GSM 07.07, GSM 02.85,
GSM 03.85, GSM 04.85

Command Description

The Test command returns the supported parameters.

The Read command returns if the Explicit CUG invocation is activated (in parameter <n>), which CUG <index> is chosen, and if Preferential Group or Outgoing Access is suppressed (in parameter <info>).

The write command serves to activate or deactivate the explicit CUG invocation, to set the desired index, and to specify if Preferential Group or Outgoing Access shall be suppressed.

Parameter Description

<n>(num)

explicit CUG invocation options	
0(D)	Deactivate explicit CUG invocation
1	Activate explicit CUG invocation

<index>(num)

0-9	explicit selection of CUG index
10(D)	No index (preferred CUG taken from subscriber data)

<info>(num)	
state of the call	
0(D)	no information
1	suppress outgoing access
2	suppress preferential CUG
3	Suppress preferential CUG and Outgoing Access.

Notes

- The active settings for omitted parameters are retained without changes.
- Explicit CUG invocation means that at each call setup, CUG information is added to the called number.
- Upon delivery, settings are predefined with
  <n>=0,
  <index>=10,
  <info>=0.
  These delivery defaults cannot be recalled automatically.
- When starting a call with ATD, Parameter 'G' or 'g' of command ATD will have no effect if the option selected for this single call is identical to the option already selected with AT+CCUG.
- Current settings are saved in the ME automatically.
- ATZ or AT&F do not influence the current settings.
- some combinations of parameters may lead to rejection of CUG calls by the network. For more information, please consult GSM 04.85

9.6 AT+CCFC Call forwarding number and conditions control

AT+CCFC controls the call forwarding supplementary service. Registration, erasure, activation, deactivation and status query are supported.

Syntax

Test Command

AT+CCFC=?

Response(s)

+CCFC: (list/range of supported <reason>s)
OK

Write Command

AT+CCFC=<reason>, <mode>[, <number>[, <type>[, <class>[, <time>]]]]

Response(s)

If <mode> is not equal 2 and command successful:
OK
If <mode>= 2, <reason> is not equal 2 and command successful:
+CCFC: <status>, <class>[, <number>, <type>]
OK
If <mode>= 2, <reason>= 2 and command successful:
+CCFC: <status>, <class>[, <number>, <type>, <time>]
OK
If error is related to ME functionality
ERROR
+CME ERROR: <err>

PIN	ASC0	ASC1	MUX1	MUX2	MUX3		Last
+	+	+	+	+	+	-	-

Reference(s)

GSM 07.07, GSM 02.04,
GSM 02.82, GSM 03.82, GSM 04.82

Parameter Description

<reason>(num)

Reason for call forwarding

0	unconditional
1	mobile busy
2	no reply
3	not reachable
4	all call forwarding (includes reasons 0, 1, 2 and 3)
5	all conditional call forwarding (includes reasons 1, 2 and 3)

<mode>(num)

Network operation to be performed for Supplementary service "call forwarding"

0	disable call forwarding (disable service)
1	enable call forwarding (enable service)
2	query status of call forwarding (query service status)
3	register <number> and activate call forwarding (register service)
4	erase <number> and deactivate call forwarding (erase service)

<number>(str)

String type phone number of forwarding address in format specified by <type>. If you select <mode>= 3, the phone <number> will be registered in the network. This allows you to disable / enable CF to the same destination without the need to enter the phone number once again. Depending on the services offered by the provider the registration may be mandatory before CF can be used. The number remains registered in the network until you register another number or erase it using <mode> = 4.

<type>(num)	
Type of address octect	
145	dialing string <number> includes international access code character '+'
129	otherwise

<class>(num)	
Integer or sum of integers each representing a class of information, i.e. a bearer service, telecommunication service or bearer service group as defined in "GSM 02.04"	
1	voice
2	data <class> 2 (data) comprises all those <class> values between 16 and 128, that are supported both by the network and the MS. This means, a setting made for <class> 2 applies to all remaining data classes (if supported). In addition, you can assign a different setting to a specific class. For example, you can activate Call Forwarding for all data classes, but deactivate it for a specific data class.
4	fax
8	SMS
16	data circuit sync
32	data circuit async
64	dedicated packet access
128	dedicated PAD access
1...[7]...255	combination of some of the above classes. For example, the default setting 7 represents the sum of the integers 1, 2 and 4 (CF for voice, data and fax). The value 255 covers all classes. If the <class> parameter is omitted, the default value 7 is used.

<time>(num)	
5...[20]...30	Time to wait before call is forwarded, rounded to a multiple of 5 sec. (only for <reason>=no reply)

<status>(num)	
0	Call Forwarding not active
1	Call Forwarding active

Notes

- You can register, disable, enable and erase <reason> 4 and 5 as described above. However, querying the status of <reason> 4 and 5 with AT+CCFC will result in an error ("+CME ERROR: operation not supported"). As an alternative, you may use the ATD command followed by *'# codes to check the status of these two reasons. See Star-Hash (*#) Network Commands for a complete list of *# GSM codes. See also examples below.
- Most networks will not permit registration of new parameters for conditional call forwarding (reasons 1,2,3,5) while unconditional call forwarding is enabled.

- The AT+CCFC command offers a broad range of call forwarding options according to the GSM specifications. However, when you attempt to set a call forwarding option which is not provisioned or not yet subscribed to, the setting will not take effect regardless of the response returned. The responses in these cases vary with the network (for example "OK", "Operation not allowed", "Operation not supported" etc.). To make sure check the call forwarding status with <mode>=2.
- Some networks may choose to have certain call forwarding condtions permanently enabled (e.g. forwarding to a mailbox if the mobile is not reachable). In this case, erasure or deactivation of call forwarding for these conditions will not be successful, even if the CCFC request is answered with response "OK".
- The command has been implemented with the full set of <class> parameters according to GSM 07.07. For actual applicability of SS "call forwarding" to a specific service or service group (a specific <class> value) please consult table A.1 of GSM 02.04.
- There is currently no release of GSM standard "GSM 02.04", in which the "Call Forwarding" Supplementary Service is defined as applicable to SMS services.

Example

Please note that when you configure or query call forwarding without specifying any classes, the settings will refer to classes 1, 2 and 4 only (=default). The handling of classes is equivalent to AT+CLCK.

- To register the destination number for unconditional call forwarding (CFU):

```
at+ccfc=0,3,"+493012345678",145
OK
```

The destination number will be registered for voice, data and fax services (default <class> 7).
In most networks, the registration will also cause call forwarding to be activated for these <class> values.

- To query the status of CFU without specifying <class>:

```
at+ccfc=0,2
+CCFC: 1,1,"+493012345678",145
+CCFC: 1,2,"+493012345678",145
+CCFC: 1,4,"+493012345678",145
OK
```

- To deactivate CFU without specifying <class>:

```
at+ccfc=0,0
OK
```

To check whether CFU was successfully deactivated (note that the destination number remains registered in the network when you disable CFU):

```
at+ccfc=0,2
+CCFC: 0,1,"+493012345678",145
+CCFC: 0,2,"+493012345678",145
+CCFC: 0,4,"+493012345678",145
OK
```

- To erase the registered CFU destination number:

```
at+ccfc=0,4
OK
```

Now, when you check the status, no destination number will be indicated:

```
at+ccfc=0,2
+CCFC: 0,1
+CCFC: 0,2
+CCFC: 0,4
OK
```

- To query the status of CFU for all classes:

```
at+ccfc=0,2,,,255
+CCFC: 0,1
+CCFC: 0,2
+CCFC: 0,4
+CCFC: 0,8
+CCFC: 0,16
+CCFC: 0,32
+CCFC: 0,64
+CCFC: 0,128
OK
```

- <reason> 4 or 5 cannot be used to query the status of all call forwarding reasons (see also notes above):

```
at+ccfc=4,2
+CME ERROR: operation not supported
at+ccfc=5,2
+CME ERROR: operation not supported
```

9.7 AT+CCWA Call Waiting

The AT+CCWA write command controls the "Call Waiting" supplementary service according to GSM 02.83. Activation, deactivation and status query are supported. The read command returns the current value of <n>.

Syntax

Test Command

AT+CCWA=?

Response(s)

+CCWA: (list of supported <n>s)
OK

Read Command

AT+CCWA?

Response(s)

+CCWA: <n>
OK

Write Command

AT+CCWA=[[<n>][, <mode>][, <class>]]

Response(s)

If <mode> is not equal 2 and command successful:
OK
If <mode>= 2 and command successful:
+CCWA: <status>, <class>
[+CCWA: <status>, <class>]
[+CCWA: ...]
OK
If error is related to ME functionality
+CME ERROR: <err>

PIN	ASC0	ASC1	MUX1	MUX2	MUX3	Last
+	+	+	+	+	+	-	-

Reference(s)

GSM 07.07, GSM 02.04,
GSM 02.83, GSM 03.83, GSM 04.83

Unsolicited Result Codes

URC 1

Indication of a call that is currently waiting and can be accepted.

+CCWA: <calling number>, <type of number>, <class>, , <CLI validity>

If <n>=1 and the call waiting supplementary service is enabled in the network, URC "+CCWA" indicates a waiting call to the TE. It appears while the waiting call is still ringing.

URC 2

Indication of a call that has been waiting.

^SCWA:

If <n>=1 and the call waiting supplementary service is enabled in the network, this URC indicates that a waiting call rang when the ME was in online mode during a CSD call, but the calling party hung up before the ME went back to command mode.

Parameter Description

<n>(num)

Switch URCs "+CCWA" and "^SCWA" for call waiting on/off

0	Disable display of URCs "+CCWA" and "^SCWA"
1	Enable display of URCs "+CCWA" and "^SCWA"

<mode>(num)

Network operation to be performed for Supplementary service call waiting

0	Disable call waiting (disable service)
1	Enable call waiting (enable service)
2	Query status of call waiting (query service status)

<class>(num)

Integer or sum of integers each representing a class of information, i.e. a bearer service, telecommunication service or bearer service group as defined in "GSM 02.04".
In the write command, parameter <class> specifies the class of the active call during which an incoming call of any class is to be regarded as a waiting call.
In URC "+CCWA: <calling number>, <type of number>, <class>, , <CLI validity>", parameter <class> specifies the class of the waiting call.

1	Voice
2	Data <class> 2 (data) comprises all those <class> values between 16 and 128, that are supported both by the network and the MS. This means, a setting made for <class> 2 applies to all remaining data classes (if supported). In addition, you can assign a different setting to a specific class. For example, you can activate call waiting for all data classes, but deactivate it for a specific data class.
4	Fax
[7]	Voice, data and fax (1+2+4)
8	SMS
16	Data circuit sync
32	Data circuit async
64	Dedicated packet access
128	Dedicated PAD access
1...[7]...255	Combination of some of the above classes. For example, the default setting 7 represents the sum of the integers 1, 2 and 4 (CF for voice, data and fax). The value 255 covers all classes. If parameter "class"is omitted, the default value 7 is used.

<status>(num)

0	Call waiting service is not active
1	Call waiting service is active

<calling number>(str)

Phone number of waiting caller in the format specified by parameter <type of number>.

<type of number>(num)

Type of address octet in integer format (refer to GSM 04.08, subclause 10.5.4.7)

145	<calling number> includes international access code character '+'

128	number restricted
129	Otherwise

<CLI validity>(num)	
0	CLI valid
1	CLI has been withheld
2	CLI is not available

Notes

- If the active call is a CSD call, and a waiting call is received, then the ME produces a BREAK while still in online mode, and displays
  - the +CCWA URC (as above) when the ME goes back to command mode while the waiting call is still active and can be accepted;
  - or the ^SCWA URC (as above) when the ME goes back to command mode after the waiting call has ended.
- With the AT+CHLD command, it is possible to establish a multiparty call or to set the active voice call on hold and then accept a waiting voice call (not possible with fax and data call). See also AT+CHLD
- Users should be aware that if call waiting is activated (<mode>=1), the presentation of URCs needs to be enabled, too (<n>=1).
  Otherwise, on the one hand, a waiting caller would be kept waiting due to lack of BUSY signals, while, on the other hand, the waiting call would not be indicated to the called party.
- The AT+CCWA command offers a broad range of options according to the GSM specifications. However, when you attempt to enable call waiting for a <class> for which the service is not provisioned or not supported , the setting will not take effect regardless of the response returned. The responses in these cases vary with the network (for example "OK", "Operation not allowed", "Operation not supported" etc.). To make sure check the current call waiting settings with <mode>=2.
- The AT+CCWA command has been implemented with the full set of <class> parameters according to GSM 07.07. For actual applicability of SS call waiting to a specific service or service group (a specific <class> value) please consult table A.1 of GSM 02.04
- Despite the specifications stated in GSM 02.04 call waiting is not handled uniformly among all networks:
  GSM 02.04, Annex A, provides the following specification:
  "The applicability of call waiting refers to the telecommunication service of the active call and not of the waiting call. The incoming, waiting, call may be of any kind." Nevertheless, networks do differ on the actual implementation of the service. For example, the activation of call waiting for <class> 4, "fax", causes some networks to send a call waiting indication if a call "of any kind" comes in during an active fax call, but others may (with the same settings active) indicate a waiting fax call during any kind of active call. Thus, the only reliable way to receive or prevent a call waiting indication under any circumstances and in any network, is to activate or deactivate call waiting for all tele- and bearer services (<class> 255).

Examples

EXAMPLE 1

Parameter <n>

at+ccwa=1	To enable the presentation of the URC
OK	

EXAMPLE 2

Parameter <mode>

at+ccwa=,1	To activate the supplementary service in the network for voice, data, and fax calls (default classes). Note that parameter <n> is left out. In this case, the current value of <n> will be retained.
OK	
at+ccwa=,2	To query the network status of call waiting for default classes
at+ccwa=1,1	Call Waiting is activated during voice calls.
at+ccwa=1,2	Call Waiting is activated during data calls.
at+ccwa=1,4	Call Waiting is activated during fax calls.
OK	

EXAMPLE 3

Parameter <class>

AT+CCWA=,0,1	To deactivate call waiting for voice calls.
OK	

9.8 AT+CHLD Call Hold and Multiparty

The AT+CHLD command controls the Supplementary Services Call Hold and Multiparty. Calls can be put on hold, recovered, released and added to a conversation.
Like for all Supplementary Services, the availability and detailed functionality of Call Hold and Multiparty services depends on the configuration of the GSM network. The BGS2-E can only request the service, but the network decides whether and how the request will be answered.

Syntax

Test Command	
AT+CHLD=?	
Response(s)	
+CHLD: (list of supported <n>s) OK	

Write Command	
AT+CHLD=[<n>]	
Response(s)	
OK ERROR +CME ERROR: <err>	

PIN	ASC0	ASC1	MUX1	MUX2	MUX3	Last	
+	+	+	+	+	+	-	-

Reference(s)
GSM 07.07

Parameter Description

<n>(num)	
0	Release all held calls or set User Determined User Busy (UDUB) for a waiting call: • If a call is waiting, release the waiting call. The calling party will receive a "BUSY" indication (Supplementary Service User Determined User Busy "UDUB") • Otherwise, terminate all held calls (if any).
1	Terminate all active calls (if any) and accept "the other call" as the active call: • If a call is waiting, the waiting call will be accepted. • Otherwise, if a held call is present, the held call becomes active.
1X	Terminate a specific call X. The call may be active, held or waiting. The remote party of the terminated call will receive a "NO CARRIER" indication. Parameter X is the call number <idx> in the list of current calls indicated by AT+CLCC. Instead of AT+CLCC, the AT^SLCC command with parameter <idx> can be used.
2	Place all active calls on hold (if any) and accept "the other call" as the active call: • If a call is waiting, the waiting call will be accepted. • Otherwise, if a held call is present, the held call becomes active.
2X	Place all active calls on hold except call X. Parameter X is the call number <idx> in the list of current calls indicated by AT+CLCC. Instead of AT+CLCC, the AT^SLCC command with parameter <idx> can be used.

3	Add a held call to the active calls in order to set up a conference (multiparty) call.
4	Connects the two calls of a multiparty call and disconnects the subscriber from both calls (ECT).

Notes

- The AT+CHLD command offers a broad range of options according to the GSM specifications. However, if you attempt to invoke an option which is not provisioned by the network, or not subscribed to, invocation of this option will fail. The responses in these cases may vary with the network (for example "Operation not allowed", "Operation not supported" etc.).
- The handling of the supplementary service Call hold and Multiparty varies with the types of calls. This is because only voice calls can be put on hold, while data or fax calls cannot. The following procedures apply: With AT+CHLD=2 the user can simultaneously place a voice call on hold and accept another waiting voice, data or fax call. If the waiting call is a data or fax call, it is also possible to put the voice call on hold. To switch back from the active data or fax call to the held voice call the active call must be terminated with AT+CHLD=1. If all active and held calls are voice calls it is possible to switch back and forth with AT+CHLD=2.
- In conflict situations, e.g. when a waiting call comes while there are already held calls, the above procedures apply to the waiting call only. For example, <n>=0 rejects the waiting call, but does not affect the held calls.
- See also the AT+CCWA command for details on how to display waiting calls.

Example

```
^SYSSTART
at+cpin="9999"
OK
+CREG: 2
+CREG: 1,"0145","0016"                  The mobile is now registered.
at+ccwa=1,1,1                           You activate the indication of waiting calls during
                                        voice calls.
OK
atd"1234567";                           You make a voice call.
OK
+CCWA: "+491791292364",145,32,,0        You receive a URC indicating a waiting data call.
at+chld=2                               You put the voice call on hold.
CONNECT 9600/RLP                        The data connection is set up.
hello
+++                                     With "+++" you go in command mode.
OK
at+clcc                                 You interrogate the status of all established calls.
+CLCC: 1,0,1,0,0,"03038639268",129
+CLCC: 2,1,0,1,0,"+491791292364",145
OK
at+chld=1                               The active data call is terminated and the held voice
                                        call becomes active.
OK
at+clcc
+CLCC: 1,0,0,0,0,"03038639268",129
OK
```

9.9 AT+CLIP Calling Line Identification Presentation

This command refers to the GSM supplementary service CLIP (Calling Line Identification Presentation) that enables a called subscriber to get the calling line identity (CLI) of the calling party when receiving a mobile terminated call.
The AT+CLIP write command enables or disables the presentation of the CLI at the TE. It has no effect on the execution of the supplementary service CLIP in the network.
The AT+CLIP read command gives the status of <n>, and also triggers an interrogation of the provision status of the CLIP service according to GSM 02.81 (given in <m>). If no SIM card is available or the SIM-PIN is not entered, the command response is "ERROR".

Syntax

Test Command

```
AT+CLIP=?
```

Response(s)

```
+CLIP: (list of supported<n>s)
OK
```

Read Command

```
AT+CLIP?
```

Response(s)

```
+CLIP: <n>,<m>
OK
ERROR
+CME ERROR: <err>
```

Write Command

```
AT+CLIP=<n>
```

Response(s)

```
OK
ERROR
+CME ERROR: <err>
```

PIN	ASC0	ASC1	MUX1	MUX2	MUX3	Last
±	+	+	+	+	+	-	-

Reference(s)

GSM 07.07, GSM 02.81

Unsolicited Result Codes

URC 1

Voice call response format:

```
+CLIP: <number>, <type>[, , [, [<alpha>][, <CLI validity>]]]
```

URC 2

Data/FAX call response format:

```
+CLIP: <number>, <type>
```

When CLIP is enabled at the TE (and is permitted by the calling subscriber), this URC is delivered after every "RING" or "+CRING" URC when a mobile terminated call occurs.

Parameter Description

<n>(num)(&W)(&V)	
[0](&F)	Suppress unsolicited result codes
1	Display unsolicited result codes

<m>(num)(&V)	
0	CLIP not provisioned
1	CLIP provisioned
2	Unknown

<number>(str)

String type phone number of calling address in format specified by <type>.

<type>(num)

Type of address octet in integer format; 145 when dialing string includes international access code character "+",128 when number is restricted otherwise 129.

<alpha>(str)

String type alphanumeric representation of <number> corresponding to the entry found in phonebook; used character set is the one selected with AT+CSCS.
Due to time constraints on the necessary evaluation of the phonebook, this parameter may show a default value in early call phases (e.g. for AT^SLCC parameter <stat>= "dialing", "incoming" or "alerting"), even if a phonebook entry is present for the number concerned.

<CLI validity>(num)	
0	CLI valid
1	CLI has been withheld by the originator.
2	CLI is not available due to interworking problems or limitations of originating network. <number> shall be an empty string ("") and <type> value will not be significant.

When CLI is not available (<CLI validity>=2), <number> shall be an empty string ("") and <type> value will not be significant. Nevertheless, TA shall return the recommended value 128 for <type> (TON/NPI unknown in accordance with GSM 04.08 subclause 10.5.4.7).

When CLI has been withheld by the originator, (<CLI validity>=1) and the CLIP is provisioned with the "override category" option (refer GSM 02.81 and GSM 03.81), <number> and <type> is provided. Otherwise, TA shall return the same setting for <number> and <type> as if the CLI was not available.

9.10 AT+CLIR Calling Line Identification Restriction

The AT+CLIR command refers to the GSM supplementary service CLIR (Calling Line Identification Restriction).

Syntax

Test Command

AT+CLIR=?

Response(s)

+CLIR: (list of supported <n>s)
OK

Read Command

AT+CLIR?

Response(s)

+CLIR<n>, <m>
OK
ERROR
+CME ERROR: <err>

Write Command

AT+CLIR=[<n>]

Response(s)

OK
ERROR
+CME ERROR: <err>

PIN	ASC0	ASC1	MUX1	MUX2	MUX3	Last	
+	+	+	+	+	+	-	-

Reference(s)

GSM 07.07

Parameter Description

<n>(num)

Parameter shows the settings for outgoing calls:

[0]	Presentation indicator is used according to the subscription of the CLIR service
1	CLIR invocation
2	CLIR suppression

<m>(num)

Parameter shows the subscriber CLIR service status in the network:

0	CLIR not provisioned
1	CLIR provisioned in permanent mode
2	Unknown (e.g. no network, etc.)
3	CLIR temporary mode presentation restricted
4	CLIR temporary mode presentation allowed

Note

- The setting of <n> is dependant of the current status at the network. In case of <n>=3 or 4 (temporary mode) the user settings in the network will be presented.

9.11 AT+COLP Connected Line Identification Presentation

This command refers to the GSM supplementary service COLP (Connected Line Identification Presentation) that enables a calling subscriber to get the connected line identity (COL) of the called party after setting up a mobile originated call. The command enables or disables the presentation of the COL at the TE. It has no effect on the execution of the supplementary service COLR in the network.

Syntax

Test Command

```
AT+COLP=?
```

Response(s)

```
+COLP:(list of supported <n>s)
OK
```

Read Command

```
AT+COLP?
```

Response(s)

```
+COLP: <n>,<m>
OK
ERROR
+CME ERROR: <err>
```

Write Command

```
AT+COLP=[<n>]
```

Response(s)

```
OK
ERROR
+CME ERROR: <err>
```

PIN	ASC0	ASC1	MUX1	MUX2	MUX3		Last
+	+	+	+	+	+	-	-

Reference(s)

GSM 07.07

Unsolicited Result Code

Call response format:

```
+COLP: <number>, <type>
```

Parameter Description

<n>(num)	
0	Disable - suppress unsolicited result codes
1	Enable - display unsolicited result codes

<m>(num)	
0	COLP not provisioned (no presentation)
1	COLP provisioned
2	Unknown

<number>(str)

String type phone number of connected address in format specified by <type>

<type>(num)

Type of address octet in integer format; 145 when dialling string includes international access code character "+", otherwise 129.

9.12 AT+CPUC Price per unit and currency table

Syntax

Test Command
AT+CPUC=?
Response(s)
OK

Read Command
AT+CPUC?
Response(s)
+CPUC: <currency>, <ppu> OK ERROR +CME ERROR: <err>

Write Command
AT+CPUC=<currency>, <ppu>[, <passwd>]
Response(s)
OK ERROR +CME ERROR: <err>

PIN	ASC0	ASC1	MUX1	MUX2	MUX3		Last
+	+	+	+	+	+	-	-

Reference(s)
GSM 07.07

Command Description

Read command returns the current parameters of PUC.

Write command sets the parameters of Advice of Charge related price per unit and currency table. SIM PIN2 is usually required to set the parameters.

Parameter Description

<currency>(str)(+CSCS)

Three-character currency code (e.g. "GBP", "EUR"). If the currency name is longer than three characters, all characters will be cut off after the third position. Before they are written to the SIM Card, these characters are converted to the standard GSM alphabet.

<ppu>(str)

Price per unit; dot is used as a decimal separator (e.g. "2.66"). The length is limited to 20 characters. If the string length is exceeded, the command is terminated with an error. This string may only contain digits and a dot. Leading zeros are removed from the string. The minimum and maximum value are determined by the structure of the SIM-PUCT file. The maximum price per unit value is 999 999 999.00. When successfully entered, this value is rounded to maximum accuracy.
Note: Due to storage in mantisse (range 0-4095) and exponent (-7 to 7) it is possible that rounding errors occur.

<passwd>(str)

SIM PIN2. String parameter which can contain any combination of digits. The maximum string length is limited to 8 digits. If this value is exceeded, the command terminates with an error message. If the PIN2 is incorrect, a CME error (+CME ERROR: incorrect password) is output.

Example

To change currency and/or price per unit you have two ways:

You can enter PIN2 along with the AT+CPUC command:

AT+CPUC="EUR","0.10","8888"	(where "8888" = PIN2)
OK	

Alternatively, you can first use the AT+CPIN2 command to enter PIN2. When you execute the AT+CPUC command, subsequently, take into account that PIN2 authentication expires after 300s (see notes in AT+CPIN2).

AT+CPUC="EUR","0.10"	
OK	Successful
AT+CPUC="EUR","0.10"	
+CME ERROR: SIM PIN2 required	Attempt not successful. PIN2 authentication has expired.

9.13 AT+CSSN Supplementary service notifications

Syntax

Test Command
AT+CSSN=?
Response(s)
+CSSN: (list of supported<n>s), (list of supported<m>s) OK

Read Command
AT+CSSN?
Response(s)
+CSSN: <n>, <m> OK

Write Command
AT+CSSN=<n>[, <m>]
Response(s)
OK ERROR +CME ERROR: <err>

PIN	ASC0	ASC1	MUX1	MUX2	MUX3		Last
-	+	+	+	+	+	-	-

Reference(s)
GSM 07.07

Unsolicited Result Codes

URC 1

+CSSI: <code 1>

When <n>=1 and a supplementary service notification is received after a mobile originated call setup, intermediate result code "+CSSI: <code 1>" is sent to TE before any other MO call setup result codes

URC 2

+CSSU: <code 2>

When <m>=1 and a supplementary service notification is received during a mobile terminated call setup or during a call, unsolicited result code "+CSSU: <code 2>" is sent to TE.

Command Description

The write command enables or disables the presentation of URCs for supplementary services.

Parameter Description

<n>(num)	
0(&F)(P)	Suppress "+CSSI" URCs
1	Activate "+CSSI" URCs

<m>(num)	
0(&F)(P)	Suppress "+CSSU" URCs
1	Activate "+CSSU" URCs

<code 1>(num)	
0	unconditional call forwarding is active
1	some of the conditional call forwardings are active
2	call has been forwarded
3	Waiting call is pending

<code 2>(num)	
0	The incoming call is a forwarded call.
5	Held call was terminated by other party
10	additional incoming call forwarded

Note

- URCs will be displayed only if the call concerned is a voice call, but some URCs will be displayed as well as for data calls (like "+CSSU"=0).

9.14 AT+CUSD Unstructured Supplementary Service Data

AT+CUSD allows to control the handling of Unstructured Supplementary Service Data (USSD) according to GSM 02.90. Both network and mobile initiated operations are supported. The interaction of this command with other AT commands based on other GSM supplementary services is described in the related technical specifications.

Parameter <ussdMode> is used to control the presentation of "+CUSD" URCs to the TE, which will be caused by a USSD response from the network or by different network or SAT initiated operations. Therefore, it is recommended to always have "+CUSD" URCs enabled.

If parameter <ussdReq> is given, a mobile initiated USSD send request or a USSD response to a network or SAT initiated operation is sent to the network. A possible response USSD of the network is again presented by a subsequent "+CUSD" URC.

Syntax

Test Command

```
AT+CUSD=?
```

Response(s)

```
+CUSD: (list of supported<ussdMode>s)
OK
```

Read Command

```
AT+CUSD?
```

Response(s)

```
+CUSD: <ussdMode>
OK
```

Write Command

```
AT+CUSD=<ussdMode>[, <ussdReq>[, <ussdDCS>]]
```

Response(s)

```
OK
ERROR
+CME ERROR: <err>
```

PIN	ASC0	ASC1	MUX1	MUX2	MUX3		Last
+	+	+	+	+	+	-	-

Reference(s)

GSM 07.07, GSM 02.90,
GSM 03.90, GSM 04.90

Unsolicited Result Code

```
+CUSD: <ussdStatus>[, <ussdRsp>[, <ussdDCS>]]
```

"+CUSD" URC indicates a USSD response from the network, respectively caused by a network or SAT initiated operation.

Parameter Description

<ussdMode>(num)	
0(&F)	Disable "+CUSD" URC presentation.
1	Enable "+CUSD" URC presentation. If a USSD send request is sent via ATD or handled by Remote-SAT (in ER mode) this setting is activated implicitly.
2	Cancel session (not applicable to read command response).

<ussdReq>(str)

Unstructured Supplementary Service Data (USSD) to be sent to the network.
If <ussdReq> parameter is not given, network is not interrogated. AT+CUSD write command only supports setting <ussdDCS>=15.

<ussdRsp>(str)(+CSCS)

Unstructured Supplementary Service Data (USSD) received from the network.
If <ussdDCS> indicates GSM 03.38 default alphabet is used, the ME converts GSM alphabet into current TE character set according to rules of GSM 07.05 Annex A. However, in case of invalid or omitted <ussdDCS>, conversion of <ussdRsp> is not possible.

<ussdDCS>(num)

GSM 03.38 Cell Broadcast Data Coding Scheme (default 15).
In case of an incoming USSD with invalid or omitted data coding scheme information <ussdDCS> will not be presented.

<ussdStatus>(num)	
0	No further user action required (network initiated USSD notification, or no further information needed after mobile initiated operation).
1	Further user action is required (network initiated USSD request, or further information is needed after mobile initiated operation). If <ussdStatus>=1 the URC ends with ">" to prompt the TE for the response data. The input action is terminated with <CTRL-Z> or aborted with <ESC>.
2	USSD exchange is terminated by network.
4	Operation not supported.
5	Network operation timeout.

Note

- It is recommended to finalize or escape a pending USSD user interaction before further actions are done to prevent blocking situations.

10. Internet Service Commands

BGS2-E has an embedded TCP/IP stack that is driven by AT commands and enables the host application to easily access the Internet. The advantage of this solution is that it eliminates the need for the application manufacturer to implement own TCP/IP and PPP stacks, thus minimizing cost and time to integrate Internet connectivity into a new or existing host application. This chapter is a reference guide to all the AT commands and responses defined for use with the TCP/IP stack.

Access is provided to the following Internet Services:

1. Socket Client and Server for TCP, Client for UDP
2. Transparent TCP Client
3. FTP Client
4. HTTP Client
5. SMTP Client
6. POP3 Client

Two design strategies for using Internet Service AT commands - URC mode or polling mode:
The BGS2-E offers two modes of controlling an Internet session opened with AT^SISO. To select the mode that best suits the preferences of your application design use the AT^SCFG command, parameter "Tcp/WithURCs" (refer to <tcpWithUrc>).

- URC mode (delivery default):
  The progress of an Internet session is URC driven. The URCs notify the host whether data can be sent or received, whether data transfer has completed, whether the service can be closed or whether an error has occurred. This mechanism eliminates the need to poll the service until the necessary progress information is received.
  To enable the URC mode select: AT^SCFG="Tcp/WithURCs",on.
- Polling mode:
  In polling mode, the presentation of URCs related to the Internet Services is disabled. The host is responsible to retrieve all the status information needed for controlling the Internet session. This is done by polling, where the host application keeps sending the commands AT^SISR, AT^SISW, AT^SISI.
  To enable the polling mode select: AT^SCFG="Tcp/WithURCs",off.
  The disabled URCs are the following: "^SISR" URC, "^SISW" URC and "^SIS" URC for parameter <urcCause>=0 (Internet service events), but not for <urcCause>=1 or 2 (needed for Socket listener and always enabled).

Step-by-step overview of how to configure and use TCP/IP communications with BGS2-E:

- Select URC mode or polling mode as described above.
- First of all, create a CSD or GPRS connection profile with AT^SICS. The connection profile is a set of basic parameters which determines the type of connection to use for an Internet service. The connection type is also referred to as bearer. Up to 6 connection profiles can be defined, each identified by the <conProfileId>.
- Secondly, use AT^SISS to create a service profile based on one of the connection profiles. Up to 10 service profiles can be defined, each identified by the <srvProfileId>. The service profile specifies the type of Internet service to use, i.e. Socket, FTP, HTTP, or one of the email services. To assign a connection profile to a service profile, the <conProfileId> of AT^SICS must be entered as "conId" value of the AT^SISS parameter <srvParmTag>.
  This offers great flexibility to combine connection profiles and service profiles. For example, you may have one connection profile (CSD or GPRS) specified with AT^SICS which can be associated with an SMTP service profile for sending emails and a POP3 service profile for retrieving emails.
- Once the connection profile and the service profile are created, an Internet session can be opened by entering the AT^SISO write command and the desired <srvProfileId>.
  In URC mode, the "^SISR" or "^SISW" URC indicates whether the service is ready to receive or send data. This means, that the AT^SISR or AT^SISW command shall be entered after the URC was received. If an error

occurs the "^SIS" URC is delivered instead.
In polling mode, you can enter the AT^SISR or AT^SISW command straight after AT^SISO though you may need to do so several times until the service confirms that data can be sent or received.

- The first parameter of the AT^SISR or AT^SISW commands is always the <srvProfileId>, the second parameter is the number of bytes which the host either wants to send to or is able to receive from the module. The way the module handles the data transfer follows the rules of the ordinary socket interface and is aware that a host may be limited by its input buffer size. The maximum data size supported by BGS2-E is 1500 bytes in both directions (read or write). To send or receive more than 1500 bytes, the read or write action shall be repeated until the data transfer has completed. Each read or write action requires that the command response (of AT^SISR or AT^SISW) confirms that the service is ready to send or receive data.
  To end an upload data stream set the <eodFlag> in the last AT^SISW command.
- For Transparent TCP service the AT command AT^SIST provides a specific mode for data exchange and accepts <srvProfileId> only. In that mode the service is connected to the interface in a transparent manner and exchanging data is not related to the AT^SISW and AT^SISR cycles. To resume AT command mode enter the +++ escape sequence or toggle the DTR line.
- The AT^SISI command shall be used to monitor the progress of the session. The command reports the service state of the used service profile and indicates the number of bytes received, the number of bytes sent and, in the case of sending, the number of bytes acknowledged or unacknowledged at TCP layer.
- If an error occurs during a session you can enter the AT^SISE command and the <srvProfileId> to identify the reason. This is especially important in polling mode.
- The AT^SICI command can be used any time to query the current status of one or all connection profile(s).
- Finally, to end a session, enter the AT^SISC write command and the <srvProfileId>.

Maximum number of profiles defined / used:

- Up to 6 connection profiles can be created (with AT^SICS).
- Up to 10 service profiles can be created (with AT^SISS), but the number of parallel profiles of the same service type is limited as listed below. If the maximum number of a service profile type is already defined, any attempt to set up another profile for the same type will be denied with "+CME ERROR: operation of service temporary not allowed".
  - Maximum 3 HTTP profiles
  - Maximum 6 socket profiles: The socket service can accept an incoming connection only when at least one service profile is still free (not yet created with AT^SISS), otherwise the incoming connection will be rejected from the listener.
  - 2 Transparent TCP profiles
  - 1 FTP profile
  - 1 POP3 profile
  - 1 SMTP profile
- The TCP/IP stack of BGS2-E supports one service profile at a time. Trying to run more than one service profile may result in a blocking of one of these service profiles.

Using Internet Service AT commands on several interfaces (ASC0, ASC1 or Multiplex mode on ASC0):

- A connection profile can be created on one interface and then viewed or changed on all other interfaces.
- A service profile can be used only on one interface at a time:
  - Service profiles can only be opened on the interface where they have been defined with AT^SISS.
  - Accordingly, on each interface the read commands AT^SISO? and AT^SISI? deliver full status information for the service profiles configured / opened on this interface, while service profiles related to other interfaces are only listed by <srvProfileId> and service type name (= <srvParmTag> value "srvType") without any status parameters.
  - Changes to a service profile are allowed only on the same interface where it was created, trying to change it on another interface is denied with "+CME ERROR: invalid index". If queried with the read command AT^SISS? the entire profile is returned on the interface where the service profile was created, while on all other interfaces only the service type of the profile is stated.
  - To free a service profile for use on another interface, use the AT^SISS command and select service type

= "none". This action deletes the entire profile and restores all parameters of the profile to their initial power-up state (all values are empty). For example, to remove the service profile 3, set AT^SISS=3,srvType,none. After this, a new profile 3 can be created on any other interface.

Address notation
Server addresses must be provided as IP addresses in standard dot-format (e.g. "192.168.1.2") or as server address names resolvable by a DNS server (e.g. "smtp.myserver.de" or "pop3.myserver.de").

Timeouts
Timeouts are not part of the Internet AT command functionality implemented in BGS2-E and, if desired, are the responsibility of the host application. It is recommended that the host application validates URCs and AT command responses and reacts adequately, for example by sending a close message or starting a timer.

Socket service used with UDP protocol
The significant differences between the TCP and UDP protocols imply that UDP sometimes requires particular procedures or even specific parameters. Details on how to handle UDP services can be found in extra notes or are included in the general parameter descriptions.

Using the DCD line to detect the connection status of Internet services
With AT&C you can configure the DCD line of the used serial interface to indicate whether an Internet service is active. For Socket, HTTP, SMTP and POP3 the states "Up" or "Connecting" are indicated, for FTP and transparent TCP only the state "Up".

10.1 AT^SICS Internet Connection Setup Profile

AT^SICS serves to create and edit Internet connection profiles. A connection profile can be assigned to one or more service profiles defined with AT^SISS, and thus, determines which type of connection is to be established when opening a service profile with AT^SISO.

The AT^SICS read command requests the current settings of all Internet connection profiles. One line is issued for every possible parameter of a given <conParmTag> "conType" value.

The AT^SICS write command specifies all parameters of a connection profile identified by <conProfileId>. At first the type of Internet connection needs to be selected via <conParmTag> value "conType". This determines the applicability of all other <conParmTag> values related to this "conType" and automatically sets their defaults. An exception is the <conParmValue-alphabet> which can be set before or after selecting "conType".

To change the settings the write command needs to be executed for each single <conParmTag>. All profile parameters set with AT^SICS are volatile.

BGS2-E supports the authentication methods PAP (Password Authentication Protocol), CHAP (Handshake Authentication Protocol) or none. The method actually used for an Internet connection via CSD or GPRS is negotiated at the LCP layer, i.e. it is negotiated with the remote peer at connection setup.

Table 10.1: Applicability of AT^SICS <conParmTag> values

<conParmTag> value	CSD	GPRS0
"conType"	mandatory	mandatory
"user"	optional	optional
"passwd"	optional	optional
"apn"	ø	mandatory
"inactTO"	optional	optional
"calledNum"	mandatory	ø
"dataType"	mandatory	ø
"dns1"	optional	optional
"dns2"	optional	optional
"alphabet"	optional	optional

Syntax

Test Command

```
AT^SICS=?
```

Response(s)

```
OK
```

Read Command

```
AT^SICS?
```

Response(s)

```
^SICS: <conProfileId>, <conParmTag>, <conParmValue>
OK
```

Write Command

AT^SICS=<conProfileId>, <conParmTag>, <conParmValue>

Response(s)

OK
ERROR
+CME ERROR: <err>

PIN	ASC0	ASC1	MUX1	MUX2	MUX3		Last
-	+	+	+	+	+	-	-

Parameter Description

<conProfileId>(num)

0...5	Internet connection profile identifier. The <conProfileId> identifies all parameters of a connection profile, and, when a service profile is created with AT^SISS the <conProfileId> needs to be set as "conId" value of the AT^SISS parameter <srvParmTag>.

<conParmTag>(str)

Internet connection parameter.

“conType“	Type of Internet connection. For supported values of <conParmValue> refer to <conParmValue-conType>.
“alphabet“	Selects the character set for input and output of string parameters within a profile. The selected value is bound to the specific profile. This means that different profiles may use different alphabets. Unlike other parameters the alphabet can be changed no matter whether the <conParmTag> value "conType" has been set. For supported values of <conParmValue> refer to <conParmValue-alphabet>.
“user“	User name string: maximum 32 characters (where "" is default).
“passwd“	Password string: maximum 32 characters (where ***** is default).
“apn“	Access point name string value: maximum 100 characters (where "" is default).
“inactTO“	Inactivity timeout value in seconds: 0 ... 2^{16}-1, default = 20 Number of seconds the bearer remains open although the service no longer needs the bearer connection. Do not set the timeout value below 3 sec. This may result in problems when using the <eodFlag> (set in the last AT^SISW command to terminate an upload data stream).
“calledNum“	Called BCD number.
“dataType“	Data call type. For supported values of <conParmValue> refer to <conParmValue-dataType>.
“dns1“	Primary DNS server address (IP address in dotted-four-byte format). This value determines whether to use the DNS server addresses dynamically assigned by the network or a specific DNS server address given by the user. "dns1" = "0.0.0.0" (default) means that the CSD or GPRS connection profile uses dynamic DNS assignment. Any other address means that the Primary DNS is manually set. The default value applies automatically if no other address is set. Note that the

	AT^SICS read command only returns a manually configured IP address, while the value "0.0.0.0" is not indicated at all, no matter whether assumed by default or explicitly specified. See also note below.
“dns2“	Secondary DNS server address (IP address in dotted-four-byte format). If "dns1" = "0.0.0.0" this setting will be ignored. Otherwise this value can be used to manually configure an alternate server for the DNS1. If "dns1" is not equal "0.0.0.0" and no "dns2" address is given, then "dns2"="0.0.0.0" will be assumed automatically. The AT^SICS read command only returns a manually configured IP address, while the value "0.0.0.0" is not indicated at all, no matter whether assumed by default or explicitly specified.

<conParmValue>(str)

Parameter value; type and supported content depend on related <conParmTag>.

<conParmValue-conType>(str)

Supported connection type values in <conParmValue> for <conParmTag> value "conType".

“CSD“	Circuit-switched data call.
“GPRS0“	GPRS connection. Settings of GPRS related commands are not used, e.g. AT+CGDCONT. When a service based on a GPRS connection profile is started after entering AT^SISO BGS2-E automatically tries to attach to the GPRS. Yet, the only exception is AT+CGATT which can be used any time to detach from the GPRS and thus disconnect the bearer opened with AT^SISO.
“none“	Clears the connection profile.

<conParmValue-alphabet>(str)

Character set selectable with <conParmValue> for <conParmTag> value "alphabet".

[“0“]	Character set determined with AT+CSCS applies.
“1“	International Reference Alphabet (IRA, seven bit ASCII) applies.

<conParmValue-dataType>(str)

Supported data call type values in <conParmValue> for <conParmTag> value "dataType".

“0“	ISDN
[“1“]	Analog

Notes

- Before opening a service profile based on a connection profile recently used, check with AT^SICI that the previous connection was properly closed. If AT^SICI confirms that the connection profile is in <conState> 0 (Down) the connection profile may be used again.
- If a GPRS network does not support or is not correctly configured for automatic DNS address assignment the TCP/IP stack cannot resolve fully qualified domain names. In this case, a warning message will be returned when trying to open an Internet service configured for automatic DNS address assignment.

10.1.1 Example: Default values of a CSD connection profile

As stated earlier, the "conType" selected with AT^SICS determines all other matching profile parameters related to this "conType". Once "conType" is set in a new profile, the default values of all other related parameters are assumed. To view the default settings you can use the read command AT^SICS?.

at^sics=1,conType,CSD	Select connection type CSD, identified by <conProfileId>1
OK	
at^sics?	Query current profiles.
^SICS: 0, "conType", ""	Profile with <conProfileId> 0 is still empty.
^SICS: 1, "conType", "CSD"	The new CSD profile just created is indicated with all related parameters set to their default.
^SICS: 1, "alphabet", "0"	Character set determined with AT+CSCS applies when string parameters are input with AT^SICS.
^SICS: 1, "user", ""	No user name set.
^SICS: 1, "passwd", "*****"	Password masked with asteriks.
^SICS: 1, "inactTO", "20"	Inactivity timeout = 20s.
^SICS: 1, "calledNum", ""	No destination set.
^SICS: 1, "dataType", "1"	Remote device is analog, e.g. an analog modem.
^SICS: 2, "conType", ""	Profile with <conProfileId> 2 is still empty.
^SICS: 3, "conType", ""	Profile with <conProfileId> 3 is still empty.
^SICS: 4, "conType", ""	Profile with <conProfileId> 4 is still empty.
^SICS: 5, "conType", ""	Profile with <conProfileId> 5 is still empty.
OK	

10.1.2 Example: GPRS connection profile

at^sics=0,conType,GPRS0	Select connection type GPRS0.
OK	
AT^SICS=0,"inactTO", "20"	Inactivity timeout = 20s.
OK	
AT^SICS=0,dns1,"193.254.160.1"	IP address of Primary DNS server.
OK	
AT^SICS=0,passwd,t-d1	Password for GPRS services provided by the German operator T-D1.
OK	
AT^SICS=0,apn,"internet.t-d1.de"	APN to access the GPRS services provided by the German operator T-D1.
OK	

10.2 AT^SICI Internet Connection Information

The AT^SICI read command requests the current status of the Internet connection profiles currently defined with AT^SICS.

The AT^SICI write command displays the status of the specified Internet connection profile. If the connection profile is not defined yet, the command returns a "+CME ERROR" response.

Syntax

Test Command

```
AT^SICI=?
```

Response(s)

```
[^SICI:(list of defined <conProfileId>s)]
OK
```

Read Command

```
AT^SICI?
```

Response(s)

```
[^SICI: <conProfileId>, <conState>, <numServices>, <conAddr>]
[^SICI: ...]
OK
```

Write Command

```
AT^SICI=<conProfileId>
```

Response(s)

```
^SICI: <conProfileId>, <conState>, <numServices>, <conAddr>
OK
ERROR
+CME ERROR: <err>
```

PIN	ASC0	ASC1	MUX1	MUX2	MUX3		Last
-	+	+	+	+	+	-	-

Parameter Description

<conProfileId>(num)

Internet connection profile identifier as defined by AT^SICS (<conProfileId>).

0...5

<conState>(num)

State of the Internet connection profile.

0	Down - Internet connection is defined but not connected.
1	Connecting - A service has been opened and so the Internet connection is initated.
2	Up - Internet connection is established and usable by one or more services.
3	Limited Up - Internet connection is established, but temporarily no network coverage. This state applies only to GPRS profiles (it does not occur with CSD).
4	Closing - Internet connection is terminating.

`<numServices>`(num)

Number of services using this Internet connection profile.

0...9

`<conAddr>`(str)

Local IP address of the Internet connection profile (empty if no address is associated yet).

Notes

- Before opening a service profile based on a connection profile recently used, check with `AT^SICI` that the previous connection was properly closed. If `AT^SICI` confirms that the connection profile is in `<conState>` 0 (Down) the connection profile may be used again.
- If `AT^SICI` is used simultaneously on different instances (e.g. Mux channels) only one request can be handled at a time. On the other instance(s) "+CME ERROR: operation temporary not allowed" will be displayed. If so, repeat the command on this instance.
- After closing the last service which uses this connection profile, parameter value `<numServices>` is decreased after the expiry of the inactivity timeout "inactTO" of `AT^SICS` only.

10.2.1 Checking Connection Profile Status

`at^sici?`	Query the current status of the connection profile.
`^SICI: 1,2,1,"10.10.0.161"`	One connection profile has been created at `<conProfileId>`=1, and one service is opened using this connection profile. The Internet connection is in `<conState>`=2 ("Up").
`OK`	

Assume the network connection is temporarily not available. (If URC presentation mode of network registration is enabled the state is shown by the URC "`+CREG`: 2").

`at^sici?`	Query once again the current status of the connection profile.
`^SICI: 1,3,1,"10.10.0.161"`	Parameter `<conState>` has changed to state "Limited up".
`OK`	

The network connection is temporarily not available but the Internet connection is still established, so the host may decide to stop the data transfer to minimize the risk of losing data due to memory limitations.

`at^sici?`	Query once again the current status of the connection profile.
`^SICI: 1,2,1,"10.10.0.161"`	After re-establishing the network connection, `<conState>` reverts to state "Up".
`OK`	

Another service has been opened with `AT^SISO`:

`at^sici?`	Query once again the current status of the connection profile.
`^SICI: 1,2,2,"10.10.0.161"`	After opening another service, parameter `<numServices>` has increased.
`OK`	

After closing one service with `AT^SISC`:

at^sici? ^SICI: 1,2,1,"10.10.0.161" OK	Query once again the current status of the connection profile. Parameter <numServices> has decreased.

After closing the last service with AT^SISC:

at^sici? ^SICI: 1,2,1,"10.10.0.161" OK at^sici? ^SICI: 1,0,0,"0.0.0.0" OK	Query once again the current status of the connection profile. The bearer is still open because of the inactivity timeout "inactTO" of AT^SICS. Query again the current status. The inactivity timeout "inactTO" of AT^SICS has expired, therefore the bearer is closed now. Parameter <numServices> has decreased.

10.3 AT^SISS Internet Service Setup Profile

AT^SISS serves to set up the necessary parameters in the Internet service profiles. Any service profile can then be used to control a data link in conjunction with AT^SISI, AT^SISO, AT^SISC, AT^SISR, AT^SISW, AT^SIST and AT^SISE.

The AT^SISS read command requests the current settings of all Internet service profiles. One line is issued for every possible parameter of a given <srvParmTag> "srvType" value.

The AT^SISS write command specifies the parameters for a service profile identified by <srvProfileId>. At first the type of Internet service needs to be selected via <srvParmTag> value "srvType". This determines the applicability of all other <srvParmTag> values related to this "srvType" and sets their defaults. Changing the <srvParmTag> "srvType" of an existing service profile will reset all <srvParmTag> default values to suit the new "srvType". An exception is the <srvParmValue-alphabet> which can be set before or after selecting "srvType" and is not reset when "srvType" changes.

To change the settings the write command needs to be executed for each single <srvParmTag>. All profile parameters set with AT^SISS are volatile.

The list below shows which <srvParmTag> parameters apply to each Internet service and which of them are mandatory or optional.

Table 10.2: Applicability of AT^SISS <srvParmTag> values

<srvParmTag>	Mandatory or optional
Socket service	
"srvType"	mandatory
"conId"	mandatory
"alphabet"	optional
"address"	mandatory
"tcpMR"	optional
"tcpOT"	optional
Transparent service	
"srvType"	mandatory
"conId"	mandatory
"alphabet"	optional
"address"	mandatory
"tcpMR"	optional
"tcpOT"	optional
FTP service	
"srvType"	mandatory
"conId"	mandatory
"alphabet"	optional
"address"	mandatory
"tcpMR"	optional
"tcpOT"	optional
HTTP service	

<srvParmTag>	Mandatory or optional
"srvType"	mandatory
"conId"	mandatory
"alphabet"	optional
"address"	mandatory
"user"	optional
"password"	optional
"hcContent"	optional
"hcContLen"	optional
"hcUserAgent"	optional
"hcMethod"	mandatory
"hcProp"	optional
"hcRedir"	optional
"hcAuth"	optional
"tcpMR"	optional
"tcpOT"	optional
SMTP service	
"srvType"	mandatory
"conId"	mandatory
"alphabet"	optional
"address"	mandatory
"user"	optional
"password"	optional
"tcpPort"	optional
"smFrom"	mandatory
"smRcpt"	mandatory
"smCC"	optional
"smSubj"	optional
"smHdr"	optional
"smAuth"	optional
"tcpMR"	optional
"tcpOT"	optional
POP3 service	
"srvType"	mandatory
"conId"	mandatory
"alphabet"	optional
"address"	mandatory
"user"	mandatory
"password"	mandatory
"tcpPort"	optional
"pCmd"	mandatory

<srvParmTag>	Mandatory or optional
"pNumber"	optional
"pLength"	optional
"pDelFlag"	optional
"tcpMR"	optional
"tcpOT"	optional

Syntax

Test Command

```
AT^SISS=?
```

Response(s)

```
OK
```

Read Command

```
AT^SISS?
```

Response(s)

```
^SISS: <srvProfileId>, <srvParmTag>, <srvParmValue>
OK
ERROR
+CME ERROR: <err>
```

Write Command

```
AT^SISS=<srvProfileId>, <srvParmTag>, <srvParmValue>
```

Response(s)

```
OK
ERROR
+CME ERROR: <err>
```

PIN	ASC0	ASC1	MUX1	MUX2	MUX3		Last
-	+	+	+	+	+	-	-

Parameter Description

<srvProfileId>(num)

Internet service profile identifier.
The <srvProfileId> is used to reference all parameters related to the same service profile. Furthermore, when using the AT commands AT^SISO, AT^SISR, AT^SISW, AT^SIST and AT^SISC the <srvProfileId> is needed to select a specific service profile.

0...9

<srvParmTag>

Internet service profile parameter.

srvType	Type of Internet service to be configured with consecutive usage of AT^SISS. For supported values of <srvParmValue> refer to <srvParmValue-srv-Type>.
alphabet	Selects the character set for input and output of string parameters within a profile. The selected value is bound to the specific profile. This means that different profiles may use different alphabets. Unlike other parameters the alphabet can

	be changed no matter whether the <srvParmTag> value "srvType" has been set. For supported values of <srvParmValue> refer to <srvParmValue-alphabet>.
user	User name string **1.** Socket Not applicable. **2.** Transparent Not applicable. **3.** FTP Not applicable; set within "address" parameter. **4.** HTTP Length: 2 ... 31 User name for the HTTP authentication mechanism. Currently only HTTP simple authentication is supported. **5.** SMTP User name to be used for SMTP authentication (string). Length: 4 ... 64. If SMTP authentication is disabled, i.e. "smAuth" flag not set, user name parameter will be ignored. **6.** POP3 User name identifying a mailbox, i.e. mailbox name (string). Length: 1 ... 64.
passwd	Password string **1.** Socket Not applicable. **2.** Transparent Not applicable. **3.** FTP Not applicable; set within "address" parameter. **4.** HTTP Length: 2 ... 31 Password for the HTTP authentication mechanism. Currently HTTP simple authentication is supported only. **5.** SMTP Password to be used for SMTP authentication (string). Length: 4 ... 64. If SMTP authentication is disabled, i.e. "smAuth" flag not set, password parameter will be ignored. **6.** POP3 Server/mailbox-specific password (string). Length: 1 ... 64. Used to perform authentication with a POP3 server.
conId	Internet connection profile to be used, for details refer AT^SICS.
tcpPort	TCP Port Number **1.** Socket Not applicable; set within "address" parameter. **2.** Transparent Not applicable; set within "address" parameter. **3.** FTP Not applicable; set within "address" parameter. **4.** HTTP Not applicable; set within "address" parameter. If parameter is omitted the service connects to HTTP default port 80.

5. SMTP
   SMTP server TCP port number (numeric)
   Length: 0 ... 2^{16}-1
   If this parameter is not set, SMTP default port number 25 is used.
6. POP3
   POP3 server TCP port number (numeric)
   Length: 0 ... 2^{16}-1
   If this parameter is not set, POP3 default port number 110 is used.

address

String value, depending on the service type either a URL in the case of Socket, FTP and HTTP or an address in the case of SMTP and POP3:

1. Socket
   - Socket type TCP client URL
     "socktcp://'host':'remote tcpPort'
   - Socket type TCP server URL
     "socktcp://listener:'local tcpPort' "
   - Socket type UDP client URL
     "sockudp://'host':'remote udpPort'[;size='byte'][;port='word']"
     Parameter "size" (optional):
     0: PDU size is variable (default).
     1 ... 1460: Fixed PDU size in bytes.
     Parameter "port" (optional):
     0: Port number will be assigned from service (default).
     1 ... 2^{16}-1: defines the local port number for the UDP client.
2. Transparent
   "'host':'remote TcpPort'[;timer=100][;etx=<etxChar>]"
   Parameter "timer" (optional): 20 ... 500 milliseconds in steps of 20. Default if parameter is not specified: 100ms. The parameter configures the Nagle algorithm, which is used in transparent access mode.
   Parameter "etx" (optional): Specifies the character used to change from transparent access mode to AT command mode.
   Range of <etxChar>: 1 ...15, 17 ... 255. 16 is not allowed because defined as DLE (0x10).
   If value is not set no escaping is configured, thus requiring either +++ or DTR ON-OFF transition for changing to AT command mode. If value is set, the transmitted bytes are parsed for the DLE (0x10) character followed by the specified <etxChar> value. If both characters are found the service returns to AT command mode without transmitting these two bytes. This behavior differs from +++ handling, where +++ is transmitted over the air.
   If you wish to send DLE characters as normal text string within your payload data the characters shall be doubled (DLE DLE).
3. FTP
   - FTP client URL (get)
     "ftp://'user':'password'@'host':'tcpPort'/'url-path' [;type='a|i|d'] "
     Refer to "IETF-RFC 1738".
   - FTP client URL (put)
     "ftpput://'user':'password'@'host':'tcpPort'/'url-path'/'element name' [;type='a|i'][;mode='u|a|d'] "

   Used parameters:
   "host" is mandatory, all other parameters are optional.
   If "password" is set then "user" must be set as well.
   If "user" is omitted the string "anonymous" is selected for "user" and "password".
   If "password" is omitted the password request is served by an empty string.
   If "tcpPort" is omitted the service connects to the FTP default port 21.
   If "url-path" contains only the IP address a directory listing is requested.
   If "url-path" contains the IP address and has a slash '/' appended a detailed directory listing is requested.
   "type": [a)scii | i)mage | d)irectory]

"mode": [u)nique | a)ppend | d)elete]
"u)nique" selects the FTP Store Unique command to create a file name unique to the current directory. If the file name is assigned by the server then the "^SIS" URC will appear, indicating <urcInfoId> 2100 and the file name.
"d)elete" clears given 'element name'.
If "mode" is omitted "replace mode" is default setting.

4. HTTP
   HTTP client URL
   Length: 6 ... 255
   "http://'server'/'path':'tcpPort' "
   "server": FQDN or IP-address
   "path": path of file or directory
   "tcpPort": If parameter is omitted the service connects to HTTP default port 80.
   Refer to "IETF-RFC 2616".
5. SMTP
   SMTP server address (string).
   Length: 4 ... 256.
6. POP3
   POP3 server address (string).
   Length: 4 ... 256.

hcContent	Optional parameter for HTTP method "Post". Length: 0 ... 127 Can be used to transfer a small amount of data. The content of this string will only be sent if "hcContLen" = 0. The maximum length of "hcContent" is 127 bytes. To transmit a larger amount of data "hcContLen" must be set to a non-zero value. In this case the "hcContent" string will be ignored, and data transmission from the client to the server is done with AT^SISW.
hcContLen	Mandatory parameter for HTTP method "Post". Length: 0 ... 2^{31}-1 The content length shall be set in the header of the HTTP "Post" request before the data part is transferred. If "hcContLen" = 0 then the data given in the "hcContent" string will be posted. If "hcContLen" > 0 then the AT^SISW command will be used to send data from the client to the server. In this case, "hcContLen" specifies the total amount of data to be sent. The data can be sent in one or several parts. For each part, the transmission is triggered by the URC "^SISW: x, 1", then the AT^SISW write command can be executed. After the exact number of bytes are transferred via the serial interface, the HTTP client will go from service state "Up" to service state "Closing" (see parameters <srvState> and <srvState> for detail). Finally, the URC "^SISW: x, 2" indicates that all data have been transferred and the service can be closed with AT^SISC.
hcUsrAgent	The user agent string must be set by the application to identify the mobile. Usually operation system and software version info is set with this browser identifier. Length: 0 ... 63
hcMethod	HTTP method specification: 0=GET, 1=POST, 2=HEAD.
hcProp	Parameter for several HTTP settings. Length: 0 ... 127 The general format is 'key': <space> 'value' Multiple settings can be given separated by "\0d\0a" sequences within the string, do not put them at the end. Possible 'key' values are defined at HTTP/1.1 Standard RFC 2616.

hcRedir	This flag controls the redirection mechanism of the BGS2-E acting as HTTP client (numeric). If "hcRedir" = 0: No redirection. If "hcRedir" = 1: The client automatically sends a new HTTP request if the server answers with a redirect code (range 30x). Default is 1.
hcAuth	If set ("hcAuth" = 1) this flag determines that the HTTP client will automatically answer on authentication requests from the server with the current "passwd" and "user" parameter settings. If these parameters are not specified the BGS2-E will terminate the HTTP connection and send an indication to the TA. Default is 1.
smFrom	Email sender address, i.e. "MAIL FROM" address (string). Length: 6 ... 256 A valid address parameter consists of local part and domain name delimited by a '@' character, e.g. "john.smith@somedomain.de".
smRcpt	Recipient address of the email, i.e. "RCPT TO" address (string). Length: 6 ... 256 If multiple recipient addresses are to be supplied the comma character is used as delimiter to separate individual address values, e.g. "john.smith@somedomain.de,tom.meier@somedomain.de". Some mail servers do not accept recipient addresses without brackets <>. It is recommended to use the "RCPT TO" variable with brackets.
smCC	CC recipient address of the email (string). Length: 6 ... 256 If multiple CC recipient addresses are to be supplied the comma character is used as delimiter to separate individual address values, e.g. "john.smith@somedomain.de,tom.meier@somedomain.de".
smSubj	Subject content of the email (string). Length: 0 ... 256 If no subject is supplied the email will be sent with an empty subject.
smHdr	This parameter, if set, will be appended at the end of the email header section (string). Length: 0... 256 Hence, it serves as a generic header field parameter which allows the user to provide any email header field. It is the user's responsibility to provide correct header fields! String of max. 256 characters. Example for multipart MIME messages: *"Content-Type: multipart/mixed"*.
smAuth	SMTP authentication control flag (numeric). If disabled (<srvParmValue> "0" by default), BGS2-E performs action without SMTP authentication. If enabled (<srvParmValue> "1") authentication procedure with the SMTP server will be performed by means of supported authentication methods, using values of "user" and "passwd" parameters. If BGS2-E and SMTP server are not able to negotiate an authentication mechanism supported by both parties, the BGS2-E continues action without authentication. BGS2-E supports SMTP authentication.
pCmd	POP3 user command to be executed by the POP3 service (numeric). For supported values of <srvParmValue> refer to <srvParmValue-pCmd>.
pNumber	Optional message number argument used by the POP3 commands List ("2"), Retrieve ("3") and Delete ("4"). For POP3 commands see <srvParmTag> value "pCmd". Length: 0 ... 2^{31}-1 If no specific value is set in the service profile, the value "0" is assumed by default, i.e. "pNumber" is disabled.

pLength	Maximum message length (string, optional) Length: 0 ... 2^{31}-1 "pLength" can be used to specify the length of the message(s) to be retrieved from or deleted on the POP3 server. If no specific value is set in the service profile, the default value "0" is assumed, which means that there is no limit on the message size. A warning will be issued inthe following cases: • If "pNumber" > 0 and a specific message to be retrieved from / deleted on the server is longer than "pLength". • If "pNumber" = 0 and all messages to be retrieved from / deleted on the server are longer than "pLength". No warning will be issued in the following cases: • If there are no messages at all on the server. • If the server has message(s) below *and* above the "pLength" specified. In this case, the message(s) within the range of "pLength" can be successfully retrieved or deleted, but the message(s) above "pLength" remain on the server without any further notification given to the user. • Therefore, after retrieving / deleting messages, it is recommended to check the message status on the server. This can be done by adding a further POP3 service profile using the POP3 user command List ("2").
pDelFlag	Flag to be used with the POP3 user command Retrieve ("3"). Specifies whether or not to delete retrieved emails on the server (optional). For supported values of <srvParmValue> refer to <srvParmValue-pDelFlag>.
tcpMR	Parameter can be used to overwrite the global AT^SCFG parameter "Tcp/MaxRetransmissions" <tcpMr> for a specific Internet Service connection profile. If the parameter is not specified the value specified with AT^SCFG will be used. Supported values <srvParmValue> for this parameter are the same as described for <tcpMr>. Setting is not relevant for Internet Service "Socket" with type "UDP".
tcpOT	Parameter can be used to overwrite the global AT^SCFG parameter "Tcp/OverallTimeout" <tcpOt> for a specific Internet Service connection profile. If the parameter is not specified the value specified with AT^SCFG will be used. Supported values <srvParmValue> for this parameter are the same as described for <tcpOt>. Setting is not relevant for Internet Service "Socket" with type "UDP".

<srvParmValue>(str)

Parameter value; type and supported content depend on related <srvParmTag>.

<srvParmValue-srvType>(str)

Supported Internet service type values in <srvParmValue> for <srvParmTag> value "srvType".
Before changing the "srvType" of an existing service profile be sure that the profile is closed. To verify the connection state of the service profile enter the read command AT^SISI. Only when <srvState>=2 is returned for this specific service profile you can change its service type.

“Socket“	BGS2-E acting as client or server (listener) for TCP or UDP. If BGS2-E is TCP listener at least two service profiles are required. The first socket profile must be configured as listener. The second service profile will be dynamically assigned when a socket connection request from a remote client is incoming. For this purpose, one service profile must be left free (= not configured with AT^SISS). An incoming socket connection request will be indicated by the "^SIS" URC, with the next free <srvProfileId> shown inside the URC as parameter <urcInfoId>. The connection request can be accepted or rejected by using the commands AT^SISO or AT^SISC and the ID retrieved from the "^SIS".

“Transparent“	BGS2-E acting as Transparent TCP socket client.
“Ftp“	BGS2-E acting as FTP client.
“Http“	BGS2-E acting as HTTP client.
“Smtp“	BGS2-E acting as SMTP client.
“Pop3“	BGS2-E acting as POP3 client.
“none“	Reset Internet service profile settings. Operation is not allowed if profile is in use, i.e. it was activated via AT^SISO.

<srvParmValue-alphabet>(str)

Supported string parameter character set selections in <srvParmValue> for <srvParmTag> value "alphabet".

[“0“]	Applicable character set is determined by current setting of AT+CSCS.
“1“	International Reference Alphabet (IRA, seven bit ASCII).

<srvParmValue-pCmd>(num)

Supported POP3 user command values in <srvParmValue> for <srvParmTag> value "pCmd".

1	Status command. This command retrieves the "drop listing" of a POP3 server. A "drop listing" consists of a single line containing the number of messages in the maildrop list followed by the total size of the maildrop list in bytes. Each drop listing will be finished by a so-called "dotline", i.e. a new line with just a single dot.
2	List command. If <srvParmTag> value "pNumber" is set to a non-zero value the "List" command returns the "scan listing", consisting of a single line which contains the message number and the message size in bytes if the specified message exists in the maildrop list on the POP3 server. If no such message exists on the server than the POP3 service issues an error response to the user. If <srvParmTag> value "pNumber" is zero the "List" command returns a multi-line "scan listing". For each message on the maildrop list of the server the POP3 service returns a line containing the message number and its size in bytes. A final "dotline" will be printed at the end of the "scan listing". If there are no messages on the maildrop list of the server, the POP3 service returns a positive response, i.e. it doesn't issue an error response, but the "scan listing" will be empty. In either case, each scan listing will be finished by a so-called "dotline", i.e. a new line with just a single dot.
3	Retrieve command. If <srvParmTag> value "pNumber" is set to a non-zero value this command retrieves the related message from the POP3 server's maildrop list. If no such message exists on the server the POP3 service issues an error response to the user. It depends on the parameter "pDelFlag" if the message will be deleted from the POP3 server upon successful retrieval. If <srvParmTag> value "pNumber" is zero the "Retrieve" command returns all messages pending in the POP3 server's maildrop. If there are no messages on the maildrop list of the server the POP3 service returns with a positive response, i.e. it doesn't issue an error response, but the returned list will be empty. Each email will be finished by a so-called "dotline", i.e. a new line with just a single dot.
4	Delete command If <srvParmTag> value "pNumber" is set to a non-zero value the command deletes the related message from the POP3 server's maildrop list. In fact, the message is marked as deleted on the server and will be deleted permanently if the POP3 service command executes successfully. In case an error has

occurred, e.g. network loss, the message will not be deleted on the server even though the POP3 service command has been finished.
If <srvParmTag> value "pNumber" is zero the "Delete" command deletes all messages from the POP3 server's maildrop list. In fact, the messages are marked as deleted on the server and will be deleted permanently if the POP3 service command executes successfully. In case an error has occurred, the messages will not be deleted on the server even though the POP3 service command has been finished.

<srvParmValue-pDelFlag>(num)

Supported flag values in <srvParmValue> for <srvParmTag> value "pDelFlag". Only applicable if the profile contains the POP3 user command Retrieve ("3").

[0]	Messages will not be deleted on the server.
1	Delete messages on the server which have been retrieved successfully.

Notes

- String parameters are truncated if greater than the maximum length specified above.
- If AT^SISS is used simultaneously on different instances (e.g. Mux channels) only one request can be handled at a time. On the other instance(s) "+CME ERROR: operation temporary not allowed" will be displayed. If so, repeat the command on this instance.
- For correct input of the @ character in address parameters please refer to Section 1.6, Supported character sets.

10.4 AT^SISI Internet Service Information

AT^SISI serves to monitor the status of Internet service profiles defined with AT^SISS.

The AT^SISI read command requests the current status of all defined Internet service profiles.

The AT^SISI write command requests the status of the specified Internet service profile. If the specified service profile is not defined yet, "+CME ERROR" is returned.

Syntax

Test Command

```
AT^SISI=?
```

Response(s)

[^SISI:(list of defined <srvProfileId>s)]
OK

Read Command

```
AT^SISI?
```

Response(s)

If response is related to service profile(s) created / opened on this interface:
[^SISI: <srvProfileId>, <srvState>, <rxCount>, <txCount>, <ackData>, <unackData>]
[^SISI: ...]

If response is related to service profile(s) created / opened on other interface(s):
[^SISI: <srvProfileId>, <srvParmTag>value "srvType"]
[^SISI: ...]
OK
ERROR

Write Command

```
AT^SISI=<srvProfileId>
```

Response(s)

^SISI: <srvProfileId>, <srvState>, <rxCount>, <txCount>, <ackData>, <unackData>
OK
ERROR
+CME ERROR: <err>

PIN	ASC0	ASC1	MUX1	MUX2	MUX3		Last
-	+	+	+	+	+	-	-

Parameter Description

`<srvProfileId>`(num)

Internet service profile identifier as defined by AT^SISS (`<srvProfileId>`).

0...9

`<srvState>`(num)

Internet service state (for details see AT^SISO parameter `<srvState>`).

2	Allocated
3	Connecting
4	Up
5	Closing
6	Down

`<rxCount>`(num)

Number of bytes received via AT^SISR or AT^SIST since last successful AT^SISO write command.
This is the same value as displayed by the AT^SISO read command with the parameter `<rxCount>`.

`<txCount>`(num)

Number of bytes sent via AT^SISW or AT^SIST since last successful AT^SISO write command.
This is the same value as displayed by the AT^SISO read command with the parameter `<txCount>`.

`<ackData>`(num)

Number of data bytes already sent and acknowledged at TCP layer. Value 0 indicates that no sent data is acknowledged yet.
Parameter is not applicable to HTTP, POP3, SMTP and Socket with UDP. For these services the counter is always set to 0.

`<unackData>`(num)

Number of data bytes already sent but not yet acknowledged at TCP layer. A value 0 indicates that all sent data is already acknowledged.
This is the same value as displayed in the response of the AT^SISW write command with the parameter `<unackData>`.
Parameter is not applicable to HTTP, POP3, SMTP and Socket with UDP. For these services the counter is always set to 0.

Note

- If a service is in state "Down" the responses for `<rxCount>`, `<txCount>`, `<ackData>` and `<unackData>` are the last known values for the service in the states "Connecting", "Up" and "Closing".

10.5 AT^SISO Internet Service Open

The AT^SISO write command starts the Internet session configured by the service profile. All further steps needed to control the session depend on whether you are using URC mode or polling mode. The AT^SISO read command returns the current status of all services.

URC mode:
If the service opens successfully, the URCs "^SISW" and "^SISR" will trigger the action to follow, either writing data with AT^SISW or reading data with AT^SISR. To terminate an upload data stream set the <eodFlag> within the last AT^SISW command. If the URCs notify that a data transfer has been successful ("^SISR: x, 2" or "^SISW: x, 2"), the service can be closed with AT^SISC. If a special event occurs, e.g. an error or a warning, after opening or while using a service then the URC type "^SIS" will be delivered.

Polling mode:
After opening the service, all progress information needed to control the session shall be explicitly requested by the host application. The particular sequence of AT commands varies depending on the service used. The following list summarizes, by way of an example, the steps normally involved in managing an upload or download job.

- Upload (Socket, FTP, HTTP,SMTP):
  - Enter the AT^SISO command, e.g. AT^SISO=9.
  - Enter AT^SISW, specify <reqWriteLength>, e.g. AT^SISW=9,20. Check resulting response for <cnfWriteLength>. Optionally, check error with AT^SISE, e.g. AT^SISE=9. If necessary, repeat the sequence several times.
  - Enter last AT^SISW command and enable <eodFlag>, e.g. AT^SISW=9,0,1.
    If Socket service: Query available data with AT^SISR, e.g. AT^SISR=9,1430.
  - Check service state with AT^SISI, e.g. AT^SISI=9, if necessary several times until <srvState>=6 ("Down").
  - Check error with AT^SISE, e.g. AT^SISE=9.
  - Close service with AT^SISC, e.g. AT^SISC=9.
- Download (Socket, FTP, HTTP, POP3):
  - Enter the AT^SISO command, e.g. AT^SISO=9.
  - Enter AT^SISR, specify <reqReadLength>, e.g. AT^SISR=9,1000. Check resulting response for <cnfReadLength>. If necessary, repeat the sequence several times until <cnfReadLength>= -2 (end of data) or ERROR.
  - Check error with AT^SISE, e.g. AT^SISE=9.
  - Close service with AT^SISC, e.g. AT^SISC=9.
- Socket service (upload and download possible in one session):
  - Recommended: Set AT+CMEE=2 to enable extended error text.
  - Enter the AT^SISO command, e.g. AT^SISO=9.
  - Enter AT^SISR or AT^SISW, specifying <reqReadLength> or <reqWriteLength>, e.g. AT^SISR=9,20 or AT^SISW=9,20. Check resulting response for <cnfReadLength> or <cnfWriteLength>. If necessary, repeat the sequence several times.
  - Check error with AT^SISE, e.g. AT^SISE=9.
  - If write action: Enter last AT^SISW command and enable <eodFlag>, e.g. AT^SISW=9,0,1. [1)]
    If Socket service: Query available data with AT^SISR, e.g. AT^SISR=9,1430.
  - Close service with AT^SISC, e.g. AT^SISC=9.
- Transparent TCP service:
  - Enter the AT^SISO command, e.g. AT^SISO=9.
  - Enter AT^SIST to enter transparent data mode. After communication has finished return to AT command mode via +++ escape sequence.
  - Check error with AT^SISE, e.g. AT^SISE=9.
  - Close service with AT^SISC, e.g. AT^SISC=9.

Syntax

Test Command

AT^SISO=?

Response(s)

OK

Read Command

AT^SISO?

Response(s)

^SISO: <srvProfileId>, <srvParmTag>value "srvType" [, <srvState>, <socketState>, <rxCount>, <txCount>, <locAddr>, <remAddr>]
[^SISO: ...]
OK

Write Command

AT^SISO=<srvProfileId>

Response(s)

OK
ERROR
+CME ERROR: <err>

PIN	ASC0	ASC1	MUX1	MUX2	MUX3	🔔	Last
±	+	+	+	+	+	-	-

Parameter Description

<srvProfileId>(num)

<srvProfileId> 0 ... 9 specified with AT^SISS.

<srvState>(num)

Internet service state.
Please note, that the state of an Internet service may influence the state of the serial DCD line. For details see description of value 2 for parameter <value> of command AT&C.

2	Allocated Service profile resources are allocated, i.e. at least the service type has been set (parameter <srvParmTag>, value "srvType" of AT^SISS). The service is not opened, but ready for configuration.
3	Connecting State after opening a service with AT^SISO where the connection is being established. If connection setup is successful the service proceeds to the state "4" (Up) and one of the URCs "^SISW" and "^SISR" may follow. If connection setup is not successful, the "^SIS" URC may appear and the service enters <srvState> 6 (Down). In the case of FTP, <srvState>=3 means that the command channel is being established. If the service profile is configured as Socket listener, then the listener always stays at <srvState>=3 and <socketState>=3 (LISTENER), while the <srvState> and <socketState> of the dynamically assigned service profile may change. See examples in Section 10.5.1.

4	Up The service performs its purpose. The data transfer process is the major function at this state. FTP: Data channel is up. SMTP: The SMTP service will not enter <srvState>=4 until the host has written the first data packet with AT^SISW.
5	Closing Internet Service is closing the network connection. FTP: Command channel is released.
6	Down This state is entered if - the service has successfully finished its session (see note on Socket), - the remote peer has reset the connection or - the IP connection has been closed because of an error (see note below on service or network errors). If a service in this state be sure to close it with AT^SISC before reopening it.

<socketState>(num)

Socket state identifier.

0	Same as value "1", but applicable only if service profile is POP3.
1	Socket not assigned, i.e. no TCP/UDP connection active.
2	Socket assigned as CLIENT.
3	Socket assigned as LISTENER.
4	Socket assigned as SERVER.

<rxCount>(num)

Number of bytes received via AT^SISR or AT^SIST since last successful AT^SISO write command.

<txCount>(num)

Number of bytes sent via AT^SISW or AT^SIST since last successful AT^SISO write command.

<locAddr>(str)

Recently used local IP address in dotted-four-byte format and TCP port, separated by colon, e.g. "192.60.10.10:80".

<remAddr>(str)

Remote IP address in dotted-four-byte format and TCP port, separated by colon, e.g. "192.60.10.10:80".

Notes

- If the bearer cannot be established and AT^SISO returns an error there might be a general GSM/GPRS problem. To identify the reason you can take advantage of the AT+CEER command. Using AT+CEER is especially recommended when the <infoID> parameter of the AT^SISE command equals 0.
- If a service or network error occurs during an IP session and the "^SIS" URC or the AT^SISE command display an error message, the service enters <srvState>=5 and then 6, i.e. the IP connection is closed. In this case, the service still allows reading the data stored in the buffer, but writing data is denied. After reading, close the service and open it again.

- As in polling mode no error URCs are available you are advised to integrate the commands AT^SISI and AT^SISE into the command sequences for upload and download jobs. So, the AT^SISO command may be followed by AT^SISI to check that the service has entered the <srvState>=4 before sending AT^SISR, AT^SISW or AT^SIST. This helps you to detect errors even though the "^SIS" URCs are disabled. A typical example is that the service fails to be opened because the service profile contains a wrong destination address. In such a case, after opening with AT^SISO and OK response, the service quickly enters the states <srvState>=2, 4 and 6, with an error being returned no earlier than after sending the first AT^SISR or AT^SISW command. In URC mode, an error URC, such as "Host not found" would be received in this situation, but in polling mode the only way to detect the state is using AT^SISI or, alternatively, AT^SISO.

10.5.1 Example: Accepting / Rejecting Socket Connection Request from Remote Client

Host 1 configured as Socket listener with IP address 10.10.0.187 at port 65534 is receiving a connection request from the remote client 10.10.0.185 (at port 1024). The example assumes that connection and service profiles have been created as stated earlier.

Start the Socket service in listener mode, then query the IP address dynamically assigned to the Socket listener:

`at^siso=4`	Host 1 opens the Socket service.
`at^siso?`	Query the current status of all services. All service profiles are unused, except for service profile 4 which is running in listener mode, where <srvState>=3 (listening) and <socketState>=3 (LISTENER). The response also indicates the IP address dynamically assigned to the listener. The listener's access data (IP address and TCP port number) shall be passed on to the client.
`^SISO: 0, ""`	
`^SISO: 1, ""`	
`^SISO: 2, ""`	
`^SISO: 3, ""`	
`^SISO: 4, "Socket","3","3","0","0","10.10.0.187:65534","0.0.0.0:0"`	
`^SISO: 6, ""`	
`^SISO: 7, ""`	
`^SISO: 8, ""`	
`^SISO: 9, ""`	
`OK`	

Indication of incoming Socket connection request:

`^SIS: 4, 1, 0`	The URC indicates that the listener configured on service profile 4 is receiving a Socket connection request (<urcCause>=1) from the remote client. The last URC parameter <urcInfoId> represents the ID of the dynamically assigned service profile, here 0.
`at^siso?`	Query the current status of services.
`^SISO: 0, "Socket","2","4","0","0",` `"10.10.0.187:0","10.10.0.185:1024"`	Indication on host 1 that the connection request from the remote client has been dynamically assigned to service profile 0 which is set to Server mode (<socketState>=4).
`^SISO: 1, ""`	
`^SISO: 2, ""`	
`^SISO: 3, ""`	
`^SISO: 4, "Socket","3","3","0","0", "10.10.0.187:65534","0.0.0.0:0"`	
`^SISO: 6, ""`	
`^SISO: 7, ""`	
`^SISO: 8, ""`	
`^SISO: 9, ""`	
`OK`	

Host 1 accepts the Socket connection request:

`at^siso=0`	Host 1 accepts the connection request, where 0 is the ID of the dynamically assigned service profile.
`OK`	
`^SISW: 0, 1`	The URC indicates that data transmission to the remote client is possible. If the remote client has already sent some data the additional URC ^SISR: 0,1 is displayed.
`at^siso?`	Query the current status of services.
`^SISO: 0, "Socket","4","4","0","0",` `"10.10.0.187:65534","10.10.0.185:1024"`	The socket connection between host 1 and remote client is successfully established.
`^SISO: 1, ""`	
`^SISO: 2, ""`	
`^SISO: 3, ""`	
`^SISO: 4, "Socket","3","3","0","0","10.10.0.187:65534","0.0.0.0:0"`	

```
^SISO: 6, ""
^SISO: 7, ""
^SISO: 8, ""
^SISO: 9, ""
OK
```

Host 1 rejects the Socket connection request:

```
at^sisc=0
OK
at^siso?
^SISO: 0, ""
^SISO: 1, ""
^SISO: 2, ""
^SISO: 3, ""
^SISO: 4, "Socket","3","3","0","0","10.10.0.187:65534","0.0.0.0:0"
^SISO: 6, ""
^SISO: 7, ""
^SISO: 8, ""
^SISO: 9, ""
OK
```

Host 1 rejects the connection request, where 0 is the ID of the dynamically assigned service profile.

Query the current status of services.

The dynamically assigned service profile is free again. The Socket listener stays at <srvState>=3 (listening) and <socketState>=3 (LISTENER).

10.6 AT^SISC Internet Service Close

The AT^SISC write command closes the TCP/IP connection to the remote peer which was opened with AT^SISO. All resources are released, all status information parameters, e.g. <srvState>, <unackData>, <ackData>, <rxCount> and <txCount> counters, are reset. Only the initial configuration settings are preserved. The service can be restarted any time, using the same configuration or a new one.

Syntax

Test Command

```
AT^SISC=?
```

Response(s)

```
OK
```

Write Command

```
AT^SISC=<srvProfileId>
```

Response(s)

```
OK
ERROR
+CME ERROR: <err>
```

PIN	ASC0	ASC1	MUX1	MUX2	MUX3	Last
±	+	+	+	+	+	-	-

Parameter Description

<srvProfileId>(num)

0...9	<srvProfileId> specified with AT^SISS.

10.7 AT^SISR Internet Service Read Data

The AT^SISR command either triggers a read operation (download) or queries the number of bytes in the internal buffer.

The AT^SISR write command may return the following errors:

- "+CME ERROR: operation failed" if there is a problem on application, socket, PPP or GPRS/GSM level. The AT^SISE command and the "^SIS" URC offer additional error information.
- "+CME ERROR: operation temporary not allowed" e.g. if the service has not network resources allocated.
- "+CME ERROR: operation not allowed" e.g. if the service is not configured.

Syntax

Test Command

```
AT^SISR=?
```

Response(s)

```
OK
```

Write Command

```
AT^SISR=<srvProfileId>, <reqReadLength>
```

Response(s)

```
^SISR: <srvProfileId>, <cnfReadLength>[, <remainUdpPacketLength>]
```

Number of data bytes are sent as specified by <cnfReadLength>. If peek operator was used no data bytes are sent.

```
OK
ERROR
+CME ERROR: <err>
```

PIN	ASC0	ASC1	MUX1	MUX2	MUX3		Last
±	+	+	+	+	+	-	+

Unsolicited Result Code

```
^SISR: <srvProfileId>, <urcCauseId>
```

Data availability status of the Internet service configured with AT^SISS has changed. The URC is issued when:

- data is available after opening an Internet service or
- less data was confirmed (in <cnfReadLength>) than requested (with <reqReadLength>) during the last "Read Data" operation and new data is available.

The URC is disabled in polling mode. See AT^SCFG, parameter "Tcp/WithURCs", <tcpWithUrc>.

Parameter Description

<srvProfileId>(num)

<srvProfileId> 0 ... 9 specified with AT^SISS.

<reqReadLength>(num)

0	Peek Operator: Query number of received bytes within internal buffers. The behaviour of the peek operator depends on the selected Internet service, i.e. it may not be supported by all IP Services. For "Socket" service configured for UDP the size of the next available UDP packet is returned.
1...1500	Requested number of data bytes to be read via the Internet service specified in <srvProfileId>.

<cnfReadLength>(num)	
-2	Indicates end of data. Data transfer has been finished (all data have been read) and the service can be closed with AT^SISC.
-1	Applies only to HTTP: Querying number of available bytes is not supported by the HTTP service.
0	Indicates that no further data is available at the moment.
>0	Number of available data bytes. The range is determined by <reqReadLength>: If <reqReadLength> was greater than 0, then <cnfReadLength> may be less or equal to the value requested with <reqReadLength>. If <reqReadLength> equals 0 (peek operator) the value indicated by <cnfReadLength> may be greater than 1500.

<urcCauseId>(num)	
Indicates whether or not data is available for reading with AT^SISR.	
1	Data is available and can be read by sending the AT^SISR command. The URC appears when less data was confirmed (in <cnfReadLength>) than requested (with <reqReadLength>) during the last "Read Data" operation and new data is available.
2	End of data. Data transfer has completed (all data read). The service can be closed with AT^SISC.

<remainUdpPacketLength>(num)	
Optional third parameter of the AT^SISR write command response displayed only if the Socket service uses the UDP protocol. The reception of each datagram must be completed before the next datagram can be received. This may be a problem if the buffer of the host application is limited and not designed to handle the maximum packet size of 1500 bytes. To compensate this, the host is advised to request, via <reqReadLength>, an amount less or equal its maxmimum buffer capacity and wait for the resulting AT^SISR write command response with parameter <remainUdpPacketLength>. The benefit of this approach is that the host may properly receive all parts of a UDP datagram, as after each received data part the number of remaining bytes is synchronized, until reading the datagram is finished. If the currently read datagram is smaller than the number of bytes requested by the host the <remainUdpPacketLength> parameter is omitted. Further write attempts with AT^SISR are denied as long as the <remainUdpPacketLength> is unequal 0 or is not omitted. In this case the service returns "+CME ERROR: operation of service temporary not allowed".	
0	Indicates that all bytes of the current UDP datagram are read.
1...(max. data size)-1	Indicates that the currently read UDP datagram is not yet complete. The displayed value is the remaining number of bytes. <remainUdpPacketLength> is unequal 0 until reading all parts of the current datagram is finished.

10.7.1 Example: Socket Host Reads Small Amounts of UDP Data Packets (URC Mode)

This section applies only to the Socket service using the UDP protocol. The example shows how to read UDP packets if the buffer of the host application can handle only a few bytes. There are two datagrams available for reading.
Buffer size: 6 bytes
Datagram A = 18 bytes (content "THIS_IS_DATAGRAM_A")
Datagram B = 3 bytes (content "NEW")

^SISR: 0,1	Service profile 0 is configured for Socket service and UDP. The URC notifies host that data is available for reading.
at^sisr=0,6	The host requests to read 6 bytes.
^SISR: 0,6,12 THIS_I OK	The first 6 bytes of datagram A are confirmed and transmitted. Another 12 bytes are still available.
at^sisr=0,6	The host requests to read the next part of 6 bytes.
^SISR: 0,6,6 S_DATA OK	The next 6 bytes of datagram A are confirmed and transmitted. Another 6 bytes are still available.
at^sisr=0,6	The host requests to read the next part of 6 bytes.
^SISR: 0,6,0 GRAM_A OK	Last part of datagram A was received, no remainder is left.
at^sisr=0,6	Again, the host requests to read 6 bytes. This time, the request refers to datagram B which has only 3 bytes. As the read datagram is smaller than the size requested by the host, the response does not include the <remainUdpPacketLength>.
^SISR: 0,3 NEW OK	3 bytes are confirmed and transmitted. Datagram B was properly received.

10.8 AT^SISW Internet Service Write Data

AT^SISW triggers a write operation (upload) and queries the amount of data already sent, but not acknowledged at the TCP layer. The write operation may be run in binary mode, or in interactive text mode.

AT^SISW write command may return the following errors:

- "+CME ERROR: operation failed" if there is a problem on application, socket, PPP or GPRS/GSM level. The AT^SISE command and the "^SIS" URC offer additional error information.
- "+CME ERROR: operation temporary not allowed" e.g. if the service has not network resources allocated.
- "+CME ERROR: operation not allowed" e.g. if the service is not configured.

Syntax

Test Command

```
AT^SISW=?
```

Response(s)

```
OK
```

Write Command

```
AT^SISW=<srvProfileId>, <reqWriteLength>[, <eodFlag>[, <mode>]]
```

Response(s)

```
^SISW: <srvProfileId>, <cnfWriteLength>, <unackData>
```

Number of data bytes as specified by <cnfWriteLength>.

```
OK
ERROR
+CME ERROR: <err>
```

PIN	ASC0	ASC1	MUX1	MUX2	MUX3	🔔	Last
±	+	+	+	+	+	-	+

Unsolicited Result Code

```
^SISW: <srvProfileId>, <urcCauseId>
```

Data availability status of the Internet service configured with AT^SISS has changed. The URC is issued when the service is ready to accept new user data. In this context the URC is also issued for Transparent TCP service that supports data transfer via AT^SIST only.
The URC is disabled in polling mode. See AT^SCFG, parameter "Tcp/WithURCs", <tcpWithUrc>.

Parameter Description

<srvProfileId>(num)

<srvProfileId> 0 ... 9 specified with AT^SISS.

<reqWriteLength>(num)

0...1500

Specifies the number of bytes to be sent with AT^SISW or, if set to 0, requests the amount of data already sent with AT^SISW but not yet acknowledged:

- Parameter <reqWriteLength> may be 1...1500 bytes to specify the amount of data to be sent with AT^SISW.
- If parameter <reqWriteLength> equals 0, AT^SISW does not expect any data, but a normal query is perfomed. This allows the application to explictly request, in particular at the end of an upload job, the amount of unacknowledged data at the TCP layer indicated by <unackData>.
- In interactive text mode, <reqWriteLength> must be set to any value greater than 0 (but not necessarily the precise number of bytes). If set to 0 in interactive text mode, <reqWriteLength> would be interpreted

as query for unacknowledged data and, thus, prevent data transfer.

- If Socket service is selected with UDP protocol
  - <reqWriteLength>=0 can be used to send an empty UDP packet;
  - it is recommended that the size of each data packet be limited to 1460 bytes. Otherwise, it is possible that the following URC occurs: "^SIS: <id>, 0, 9, The supplied buffer was too small / large".

<eodFlag>(num)

End of data indication flag.
Parameter is ignored for HTTP, POP3, FTP download.

[0]	No end of data. Other data may follow to be transmitted via the Internet service.
1	End of data is signalled to the Internet Service. Further AT^SISW write commands return an error response. However, reading data may be possible. The <eodFlag> is effective only if the <reqWriteLength> equals <cnfWriteLength>, in particular if the <reqWriteLength> equals 0. If <mode> equals 1 the <eodFlag> is effective only if the write operation has been finished with CTRL-Z.

<mode>(num)

Control how the application provides the data bytes to be sent.

[0]	Binary mode This mode allows sending a number of bytes defined with parameter <reqWriteLength>.
1	Interactive text mode This mode allows the user to type and send 8-bit ASCII characters while the service is open. Ctrl-Z terminates data input and causes the data to be transferred. Interactive text mode requires that the <reqWriteLength> is set to any value greater than 0 (though it is not necessary to specify the precise number of bytes). In this case the <cnfWriteLength> parameter indicates the maximum length of the data stream without control character CTRL-Z. In interactive text mode, the following characters are predefined as control codes: • BACKSPACE ("\x08") deletes the last given character, • CTRL-Z ("\x1a") terminates the input, • ESC ("\x1b") aborts the command. An <eodFlag> is ignored in this case. The V.25 command ATE also controls the echo mode of the interactive text mode. If echo is enabled (ATE1) all characters are echoed until <cnfWriteLength> is reached. Any attempt to input further data ends up with the warning message 4001 indicated after the data stream has been completed with CTRL-Z, nevertheless all data within the range of <cnfWriteLength> will be sent. See also Section 10.11, Internet Service URC "^SIS". ATE0 disables the echo mode generally.

<cnfWriteLength>(num)

0...1500	Confirmed number of data bytes which can be transmitted via the Internet service configured in <srvProfileId>. In binary mode (see <mode>) this number may be less or equal to the value requested with <reqWriteLength>. The application has to deliver exactly the number of bytes indicated by <cnfWriteLength>. A 0 value means that no data can be written at this time, i.e. it serves as a flow control mechanism. In interactive text mode, <cnfWriteLength> indicates the maximum number of bytes it can process. Characters above the indicated number are ignored.

<unackData>(num)

Number of data bytes already sent but not yet acknowledged at the TCP layer.
The value is constantly changing until the entire upload job has completed. If the value equals 0 all data sent so far is acknowledged.
In binary mode, <unackData> includes the <cnfWriteLength> value of the pending write operation. Therefore, the very first write operation of an upload job returns identical values for <cnfWriteLength> and <unackData>.
This mechanism allows the host application to easily verify whether or not the remote host has successfully received the data.
Parameter is not applicable to HTTP, POP3, SMTP and Socket with UDP protocol. For these services the counter is always set to 0.

<urcCauseId>(num)	
1	The service is ready to accept new user data.
2	Data transfer has been finished successfully and Internet service may be closed without loss of data.

Notes

- Do not send any characters after AT^SISW command line termination (ATS3) until response "^SISW" is received. This is necessary to avoid that any characters related to the AT command can be interpreted as being part of the data stream to be transferred. Also refer to Section 1.4, AT Command Syntax.
- If the Socket service is configured for use as UDP client and fixed size and the interactive text mode is active, the PDU length always equals the specified fixed length. If the input characters exceed the specified fixed length, then all surplus characters will be ignored. If the input characters are less than the specified fixed length, then the remaining range will be filled with "\0" bytes.

10.8.1 Usage of parameter <eodFlag>

Service type	
Socket	After the service accepts the end-of-data flag the service state changes to "Closing". No further user data is accepted. After releasing the TCP link the service remains in state "Down".
FTP	Parameter only applicable for FTP upload session. After accepting the end-of-data flag the service state changes to "Closing" and starts to end the running FTP session. No further user data is accepted. After the FTP session is completed on FTP protocol level the service state switches to "Down". In case of successful completion the URC "^SISW: x,2" is generated.
SMTP	SMTP service sends some "closing" commands to the SMTP server which are necessary to mark the email as successfully sent on the server. The service enters "Closing" state and remains in it until the final protocol exchange with the SMTP server has been completed. The "OK" response following AT^SISW indicates that the SMTP service has accepted the last data - IT DOES NOT indicate the successful completion of the SMTP service. Successful completion will be indicated either by the appropriate URC "^SISW:x,2" or due to the fact that the SMTP service state changes to "Down" state without any error.
HTTP / POP3	Parameter not applicable, i.e. value is ignored.

10.9 AT^SIST Enter Transparent Access Mode

AT^SIST applies only to Transparent TCP service if defined with AT^SISS. It can be used after the Transparent service has been opened with AT^SISO and is in "Up" state (<srvState>=4). If the service is not "Up" trying to open it will be denied with "+CME ERROR: operation temporary not allowed".

There are two ways to verify that the service is "Up": Each time after opening the service with AT^SISO wait for the "^SISW: x, 1" URC (if URC mode is enabled). In addition, or when using Polling mode, you can request the <srvState> with AT^SISO or AT^SISI.

Then, after entering the AT^SIST command, the CONNECT response notifies that the service has entered transparent access mode and is ready to transparently send and receive payload data over the serial interface. In this mode, the signaling of URCs is dependent on the settings made with AT^SCFG, parameter <udri>.

There are several ways to quit the transparent access mode and revert to AT command mode:

- +++ escape sequence (also transmitted over the air)
- DTR ON-OFF transition (see AT&D for configuring DTR line)
- "etx" parameter set within the server address for transparent access mode (see AT^SISS, <srvParmTag> "address".

Switching back and forth between both modes does not affect the underlying socket and has no influence on the service <srvState>.

If the Transparent service is released by the server the following applies:

- If the service is in transparent access mode (CONNECT mode): ME returns to AT command mode, issues a specific "NO CARRIER" result code and goes to <srvState> 6 ("Down"). The "NO CARRIER" result code starts with 0x10 (DLE) and 0x04 (EOT) and ends with the command line termination character (ATS3), followed by the response formatting character (ATS4).
- If the service is in AT command mode and no data is pending: "^SIS" URCs notify the client that the server has disconnected and the ME goes to <srvState> 6 ("Down").
- If the service is in AT command mode and data is still available: "^SIS" URCs notify the client that the server has disconnected and the service remains in <srvState> 5 ("Closing"). In this case the client shall open the transparent access mode with AT^SIST. After the CONNECT response, all remaining data can be transferred. After that, the ME goes to <srvState> 6 ("Down").
- In all above scenarios, the Transparent TCP service shall be closed with AT^SISC. Trying to return to transparent access mode with AT^SIST would only end up with "NO CARRIER" once again and is not recommended.
- Use AT^SISO and AT^SISI to check the <srvState>.
- Please note that the "^SIS" URCs mentioned above vary with the network. There may be for example "^SIS" URCs with <urcInfoId> 15 ("Remote host has reset the connection") and 19 ("Socket has been shut down). See Section 10.11, Internet Service URC "^SIS" for a list of possible URCs.

Syntax

Test Command

AT^SIST=?

Response(s)

OK

Write Command

AT^SIST=<srvProfileId>

Response(s)

CONNECT
(indicates that ME has entered transparent access mode)
OK
ERROR
+CME ERROR: <err>

PIN	ASC0	ASC1	MUX1	MUX2	MUX3		Last
-	+	+	+	+	+	-	+

Parameter Description

`<srvProfileId>`(num)

`<srvProfileId>` 0 ... 9 specified with `AT^SISS`.

10.10 AT^SISE Internet Service Error Report

The AT^SISE write command returns the current error status of the specified Internet service profile. If the service profile is not defined or the value is invalid "+CME ERROR" response is returned.
The error status is identical to the content of the "^SIS" URC last issued.
If a service fails the commands AT^SISR, AT^SISW or AT^SIST will return an error response. However, if the AT^SISE command returns <infoID>=0 it is recommended to use the AT+CEER command because a general GSM/GPRS problem might be the reason.

Syntax

Test Command

```
AT^SISE=?
```

Response(s)

```
OK
```

Write Command

```
AT^SISE=<srvProfileId>
```

Response(s)

```
^SISE: <srvProfileId>, <infoID>[, <info>]
OK
ERROR
+CME ERROR: <err>
```

PIN	ASC0	ASC1	MUX1	MUX2	MUX3		Last
-	+	+	+	+	+	-	-

Parameter Description

<srvProfileId>(num)

Internet service profile identifier as defined by AT^SISS <srvProfileId>.

0...9

<infoID>(num)

Reason for Internet service error. This is a subset of the <urcInfoId>s which can be found in Section 10.11, Internet Service URC "^SIS".
The value 0 indicates there is no special Internet service error. In this case the application may use AT+CEER to check for general GSM/GPRS problems.

<info>(str)

Information text related to <infoID>. This is a subset of the <urcInfoText>s which can be found in Section 10.11, Internet Service URC "^SIS".

Note

- In particular cases, the AT^SISE command may deliver information and warnings. This applies the following services:
  FTP: Information 2100
  POP3: Warnings
  SMTP: Warnings
  If an error occurs the information and warning messages are overwritten by error messages.

10.11 Internet Service URC "^SIS"

This section first describes the syntax and the parameters of the "^SIS" URC. The second part consists of tables listing the information elements delivered within the "^SIS" URC and the command response of AT^SISE.

The presentation of the "^SIS" URC containing the parameter <urcCause>=0 can be disabled or enabled depending on whether polling mode or URC mode is preferred. To do so, use the AT^SCFG command, parameter "Tcp/WithURCs" (refer to <tcpWithUrc>). However, if related to <urcCause>=1 or 2, the "^SIS" URC will always be delivered regardless of the setting made with AT^SCFG.

Unsolicited Result Code

Indicates an event, an error or an information element. The same information can be obtained via AT^SISE.

^SIS: <srvProfileId>, <urcCause>[, [<urcInfoId>][, <urcInfoText>]]

The URC may appear if an event or an error occurs, for example after opening an Internet service with AT^SISO or any time during operation. The URC also indicates a request for a mobile terminated Internet service client connection, or a failure if a mobile terminated request is rejected. Furthermore, the URC may deliver an information element resulting from a specific command given in the service profile.

A list of possible causes can be found in the tables below. The tables contain the <urcInfoId> and, if applicable, a specific <urcInfoText>. If marked with *) the precise text related to a <urcInfoId> varies greatly depending on the scenario and the implementation of the remote server. In these cases, only a brief explanation of the scenario can be found in the table column "Description".

Parameter Description

<urcCause>(num)

URC cause identifier.

0	An event has occurred after opening or while using an Internet service. The event number is presented via <urcInfoId> and may be an error, a warning, an information element or a note. Optionally additional information may be supplied via <urcInfoText>.
1	Indicates that an opened Socket listener service is receiving a connection request from a remote client. The incoming socket connection is dynamically assigned to the next free Internet service profile. In this case, the parameter <urcInfoId> inside the "^SIS" URC equals the <srvProfileId> of the dynamically assigned service profile. This ID shall be used to accept the connection request with AT^SISO or to reject it with AT^SISC. The connection status may be requested by using the AT^SISI read or write command or the AT^SISO read command. Among other details, the response indicates the IP address of the remote client (parameter <remAddr>). This may be helpful to decide whether to accept or reject the request.
2	Incoming Socket service client connection has failed. The client request was rejected automatically because no free Internet service profile was available.

<urcInfoId>(num)

Information identifier related to <urcCause>. See tables below for further detail. The <urcInfoId> number ranges indicate the type of information element:
0: Service is working properly.
1 - 2000: Error, service is aborted and enters <srvState>=6 (Down).
2001 - 4000: Information related to progress of service.
4001 - 6000: Warning, but no service abort.
6001 - 8000: Notes
Additional information for Socket service: As stated above, if a Socket connection request from a remote client is received (see <urcCause>=1) the <urcInfoId> equals the <srvProfileId> of the dynamically assigned free service profile.

<urcInfoText>(str)

Information text related to <urcCause>. See tables below for further detail.

10.11.1 Information Elements Related to the Service Application

The following table lists the informatiomation elements which may be returned by all supported services within the "^SIS" URC and the command response of AT^SISE. It should be noted that TCP/IP socket problems may occur in all Internet service connections (Socket, Transparent TCP, FTP,HTTP, POP3 or SMTP).

<urcInfoId>	<urcInfoText>	Description
Information Elements Returned by the TCP/IP socket		
2	Invalid socket descriptor	Socket error
3	Bad address specified	Socket error
4	Invalid operation	Socket error
5	No free socket descriptors	Socket error
6	The operation would block	Socket error
7	A previous attempt at this operation is still ongoing	Socket error
8	Socket is not bound	Socket error
9	The supplied buffer is too small / large	Socket error
10	Flags not supported	Socket error
11	Operation not supported	Socket error
12	The address is already in use	Socket error
13	The network is unavailable	Socket error
14	An established connection was aborted (transmission time-out or protocol error)	Socket error
15	Remote host has reset the connection	Socket error
16	No buffer space available	Socket error
17	The socket is already connected	Socket error
18	For TCP/IP sockets, the socket is not connected	Socket error
19	Socket has been shut down	Socket error
20	Connection timed out	Socket error
21	Remote host has rejected the connection	Socket error
22	Remote host is unreachable	Socket error
23	An unexpected error occurred	Socket error
24	Host not found	DNS error
25	An error occurred that may be transient; a further attempt may succeed.	DNS error
26	An unrecoverable error occurred	DNS error
General Information Elements		
46	Fatal: The service has detected an unknown error	
47	*)	Indicates that the remote service has closed the connection. The host shall close the service.

<urcInfoId>	<urcInfoText>	Description
48	Remote peer has closed the connection	Remote peer has closed the connection unexpectedly, and no data are available. The host shall close the service. Note that the "^SIS" URC only indicates the <urcInfoId>, but the AT^SISE command indicates both the <urcInfoId> and the <urcInfoText>.
49	Fatal: No memory is available for service action	
50	Fatal: Service has detected an internal error	
80		Connection profile not defined.
84	PPP LCP FAILED	PPP error
85	PAP Authentication failed	PPP error
86	CHAP Authentication failed	PPP error
87	IPCP failed	PPP error
Warnings		
4001		Applies only to interactive text mode: Indicates that number of input characters is greater than <cnfWriteLength>.
General Information Elements		
6001		General progress information for connection setup.

*) Text varies depending on scenario.

10.11.2 Information Elements Related to FTP Service

<urcInfoId>	<urcInfoText>	Description
100	**)	FTP Server rejects session.
101	**)	FTP Server rejects USER command.
102	**)	FTP Server rejects PASS command.
103	**)	FTP Server rejects PASV command or client can't detect remote IP address.
104	**)	FTP Server rejects requested client action.
105	**)	The given path segment is wrong.
2100	FILE: <filename>	File name assigned by FTP server if mode=u is used.

**) Text varies depending on FTP server implementation. See RFC 959 for possible responses.

10.11.3 Information Elements Related to HTTP Service

<urcInfoId>	<urcInfoText>	Description
Error URCs		
200	HTTP-ERR: Not connected - cannot send request HTTP-ERR: failed on sending request	
201	<HTTP Response Str>	Client error
202	<HTTP Response Str> HTTP-ERR: Service unavailable	Server error
203	HTTP-ERR: Redirect failed - too many redirects HTTP-ERR: Redirect failed - not allowed HTTP-ERR: Redirect failed - location missing	Max. number of allowed redirects: 6
204	HTTP-ERR: auth failed - user name or password missing HTTP-ERR: auth failed - user name or password wrong HTTP-ERR: Authority required for this URL HTTP-ERR: No access to this URL allowed	
Info URCs		
2200	HTTP Redirect to: <Host>:<Port> <Path>	
2201	HTTP Response <Response code> Example: ^SIS: 2,3,2201, "HTTP Response: HTTP/1.1 200 OK"	

10.11.4 Information Elements Related to POP3 Service

<urcInfoId>	<urcInfoText>	Description
Errors		
300	***)	Indicates that the POP3 User Command could not be executed successfully.
Warnings		
4300	***)	POP3 specific warning

10.11.5 Information Elements Related to SMTP Service

<urcInfoId>	<urcInfoText>	Description
Errors		
400	***)	Indicates that the SMTP service could not be executed successfully.
Warnings		
4400	***)	SMTP specific warning

***) Text varies depending on scenario.

10.12 Examples of how to Configure and Use Internet Service Profiles

Below you can find selective examples of how to configure and use Internet service profiles. To visualize the difference between URC mode and polling mode the operation of services (after opening with AT^SISO) is explained in separate examples for either mode.
For correct input of the @ character in address parameters please refer to Section 1.6, Supported character sets.

10.12.1 Selecting URC Mode or Polling Mode

To enable or disable the presentation of URCs for the Internet services use the AT^SCFG command, type "TcpIp/WithURCs" and select "on" or "off" for parameter <tcpWithUrc>.

at^scfg=tcp/withurcs	Query the current setting.
^SCFG: "Tcp/WithURCs","on"	URC mode is enabled (delivery detault).
OK	
at^scfg=tcp/withurcs,off	Select polling mode (by switching off URC mode).
^SCFG: "Tcp/WithURCs","off"	Polling mode is accepted.
OK	

10.12.2 Configuring Socket Listener

The example assumes that a connection profile has been created as explained in Section 10.1.1 or Section 10.1.2. Keep in mind that if the host is configured as listener another service profile must be left free to be dynamically assigned as Server when the listener receives a connection request from a remote client.

Configure the service profile 4 for use as Socket listener:

at^siss=4,srvType,socket	Select service type Socket.
OK	
at^siss=4,conId,0	Select connection profile 0.
OK	
at^siss=4,address,"socktcp://listener:65534"	The host specifies its local port 65534 to be used for the Socket listener service. The local IP address will be dynamically assigned when the service is opened with AT^SISO.
OK	

Open the Socket service and query the IP address dynamically assigned to the Socket listener:

at^siso=4	Open the Socket service.
OK	
at^siso?	Query the current status of services. All service profiles are unused, except for service profile 4 which is running in listener mode, where <srvState>=3 (listening) and <socketState>=3 (LISTENER). The response also indicates the IP address dynamically assigned to the listener.
^SISO: 0, ""	
^SISO: 1, ""	
^SISO: 2, ""	
^SISO: 3, ""	
^SISO: 4, "Socket","3","3","0","0","10.10.0.187:65534","0.0.0.0:0"	
^SISO: 6, ""	
^SISO: 7, ""	
^SISO: 8, ""	
^SISO: 9, ""	
OK	

10.12.3 Configuring Socket Client for Calling a Socket Listener on Another Host

The example assumes that a connection profile has been created as explained in Section 10.1.1 or Section 10.1.2.

Configure the client's service profile 1 for calling a Socket listener on another host:

at^siss=1,srvType,socket OK	Select service type Socket.
at^siss=1,conId,0 OK	Select connection profile 0.
at^siss=1,address,"socktcp:// 10.10.0.187:65534" OK	The service profile of the client contains the IP address and the TCP port of the remote host.

10.12.4 Socket Client Sends Data via TCP Connection (Polling Mode)

The example uses service profile 0 configured for Socket service and TCP.

AT^SISO=0 OK	The host opens service profile 0. Note: URC ^SISW:0, 1 does not appear! The host must poll the service state by means of AT^SISI until the service is in <srvState> "Up".
AT^SISI=0 ^SISI: 0,3,0,0,0,0 OK	The service is still in <srvState> "Connecting".
AT^SISI=0 ^SISI: 0,4,0,0,0,0 OK	The service is now in <srvState> "Up" and is ready to accept data.
AT^SISW=0,10 ^SISW: 0,10,10 0123456789 OK	The host requests to write 10 bytes. Response that 10 bytes can be sent and are unacknowledged.
AT^SISW=0,10,1 ^SISW: 0,0,10 OK	The host requests to write next 10 bytes and enables the end-of-data flag. But the service refuses the request, even the end-of-data flag remains without effect.
AT^SISW=0,10,1 ^SISW: 0,10,20 0123456789 OK	Next try (polling). Response that the service accepts 10 bytes and this data and the previously sent data are unacknowledged.
AT^SISW=0,0,0 ^SISW: 0,0,10 OK	Polling to request unacknowledged data. There are 10 bytes still unacknowledged.
AT^SISI=0 ^SISI: 0,5,0,20,10,10 OK	Polling for <srvState> change ("Closing" -> "Down"). 20 bytes are transfered via serial interface, 10 bytes are acknowledged by remote peer, 10 bytes are on the way.

AT^SISI=0	Polling for <srvState> change ("Closing" -> "Down").
^SISI: 0,6,0,20,20,0	The Service is in state "Down" and all data is confirmed by the remote peer.
OK	
AT^SISC=0	Closing the Socket service.
OK	

10.12.5 Socket Client Sends Data via TCP Connection with URCs

The example uses service profile 0 configured for Socket service and TCP.

AT^SISO=0	The host opens service profile 0.
OK	
^SISW: 0,1	Socket service is ready for upload.
AT^SISW=0,10	The host requests to write 10 bytes.
^SISW: 0,10,10	Response that 10 bytes can be sent and are unacknowledged.
0123456789	
OK	
^SISW: 0,1	The URC indicates that the Socket service is ready to transfer more data. Data of the last AT^SISW command are transferred to the remote host.
AT^SISW=0,10,1	The host requests to write next 10 bytes and enables the end-of-data flag to notify that these are the last 10 bytes of the session.
^SISW: 0,10,20	Response that the service accepts 10 bytes and this data and the previously sent data are unacknowledged.
0123456789	
OK	
------	Waiting for URC.
^SISW: 0,2	Data transfer has been finished.
AT^SISC=0	Closing the Socket service.
OK	

10.12.6 Configuring and Using FTP Download (URC Mode)

First set up a connection profile as explained in Section 10.1.1 or Section 10.1.2. Enter at least all parameters which are mandatory for the connection profile.

Configure the service profile 1 for FTP:

at^siss=1,srvType,ftp	Select service type FTP.
OK	
at^siss=1,conId,0	Select connection profile 0.
OK	
at^siss=1,address,"ftp://192.168.1.2;type=d"	Specify FTP address with user and password anonymous.
OK	

Make an FTP connection:

at^siso=1	Open the service.
OK	Bearer is established, service is getting started.
^SISR: 1, 1	Data is available.
at^sisr=1,1500	Request to read 1500 bytes.

^SISR: 1, 50 hardware inttest software support systemtest OK	50 bytes are now available.
^SISR: 1, 2	Data transfer finished. No more data available. The connection to the FTP server is closed.
at^sisc=1 OK	Close the service.

10.12.7 Configuring and Using FTP Upload (URC Mode)

First set up a connection profile as explained in Section 10.1.1 or Section 10.1.2. Enter at least all parameters which are mandatory for the connection profile.

Configure the service profile 1 for FTP:

at^siss=1,srvType,ftp OK	Select service type FTP.
at^siss=1,conId,0 OK	Select connection profile 0.
at^siss=1,address,"ftpput://myname:mypasswd@192.168.1.2/upload/example.bin;type=i" OK	Specify FTP address with individual user name and password. The file "example.bin" shall be created on the FTP server.

Make an FTP connection:

at^siso=1 OK	Open the service. Bearer is established, service is getting started.
^SISW: 1, 1	FTP service is ready for upload.
at^sisw=1,100	Client requests to send 100 bytes.
^SISW: 1,100,100	The write command response confirms that 100 bytes must be transferred now.
01234567890123456789012345678901234567890123456789012345678901234567890123456789012345678901234567890123456789 OK	User data is transferred.
^SISW: 1, 1	URC indicates that the FTP service is ready to transfer more data. Data of the last AT^SISW command is transferred to the remote host.
at^sisw=1,0,1 OK	No more data available. The file "example.bin" shall be closed on the FTP server.
^SISW: 1, 2	Data transfer finished successfully. The connection to the FTP server is closed.
at^sisc=1	Close the FTP service.

10.12.8 Configuring SMTP Service Profile

First set up a connection profile as explained in Section 10.1.1 or Section 10.1.2. Enter at least all parameters which are mandatory for a CSD or GPRS profile. The example uses the connection profile ID 1 and the service profile ID 9.

at^siss=9,srvType,"Smtp" OK	Select service type SMTP.

`at^siss=9,alphabet,"1"`	Choose ASCII alphabet.
`OK`	
`at^siss=9,conId,"1"`	Select connection profile 1.
`OK`	
`at^siss=9,address,"192.168.1.2"`	Specify SMTP server address.
`OK`	
`at^siss=9,user,"subscriber1"`	Specify sender's user name required for SMTP authentication.
`OK`	
`at^siss=9,passwd,"subscr1"`	Specify password used by the sender for SMTP authentication.
`OK`	
`at^siss=9,smFrom,"subscriber1@testdomain.com"`	Sender's email address.
`OK`	
`at^siss=9,smRcpt,"subscriber2@testdomain.com"`	Recipient's email address.
`OK`	
`at^siss=9,smSubj,"Meeting Request Sunday Morning"`	Enter text for subject field.
`OK`	
`at^siss=9,smAuth,"1"`	Sender name and password can be used for SMTP authentication.
`OK`	
`at^siss?`	To check the profile enter the AT^SISS read command. The response includes the values of all 10 connection profiles. In this example, no values are set for the profiles 0 through 8. Service profile 9 contains the values specified above and the values automatically assumed by default.
`^SISS: 0, "srvType", ""`	
`^SISS: 1, "srvType", ""`	
`^SISS: 2, "srvType", ""`	
`^SISS: 3, "srvType", ""`	
`^SISS: 4, "srvType", ""`	
`^SISS: 6, "srvType", ""`	
`^SISS: 7, "srvType", ""`	
`^SISS: 8, "srvType", ""`	
`^SISS: 9, "srvType", "Smtp"`	
`^SISS: 9, "conId", "1"`	
`^SISS: 9, "alphabet", "1"`	
`^SISS: 9, "address", "192.168.1.2"`	
`^SISS: 9, "user", "subscriber1"`	
`^SISS: 9, "passwd", "*******"`	
`^SISS: 9, "smFrom", "subscriber1@testdomain.com"`	
`^SISS: 9, "smRcpt", "subscriber2@testdomain.com"`	
`^SISS: 9, "smCC", ""`	
`^SISS: 9, "smSubj", "Meeting Request Sunday Morning"`	
`^SISS: 9, "smHdr", ""`	
`^SISS: 9, "tcPort", "25"`	Default: TCP port number commonly used for SMTP.
`^SISS: 9, "smAuth", "1"`	
`^SISS: 9, "tcpMR", "10"`	Default: Number of retransmission attempts for TCP packets is 10 (= default of AT^SCFG).
`^SISS: 9, "tcpOT", "6000"`	Default: Timeout before closing outstanding TCP connection is 6000 sec (= default of AT^SCFG).
`OK`	

10.12.9 Sending Email (URC Mode)

This example uses the service profile described in Section 10.12.8.

`at^siso=9`	Open the service, i.e. start to send the email.
`OK`	

^SISW: 9, 1	The "^SISW" URC indicates that email data can be transferred.
at^sisw=9,87	The email to be sent has 87 bytes.
^SISW: 9,87,87	The write command response confirms that 87 bytes are available for transmission.
Good Morning everyone, we are delighted to announce our next meeting on Sunday morning.	Write the message text.
OK	
at^sisw=9,0,1	Set the <eodFlag> to mark the end of the email body.
^SISW: 9,0,0	The <eodFlag> is accepted by the service.
^SISW: 9,2	The "^SISW" URC confirms that all data is sent successfully.
at^sisi=9	Check the connection state of the service profile 9.
^SISI: 9,6,0,87,0,0	The command response confirms that the SMTP service is in state "6" (Down) and that 87 bytes have been transferred.
at^sisc=9	Close the service.
OK	

10.12.10 Sending Email (Polling Mode)

This example uses the service profile described in Section 10.12.8.

at^siso=9	Open the service, i.e. start to send the email.
OK	
at^sisw=9,10	Try to write 10 bytes.
^SISW: 9, 10, 0	The service response indicates that 10 bytes can be written.
Hallo Tom!	Write 10 bytes.
OK	
at^sisw=9,10	Try to write 10 bytes.
^SISW: 9, 0, 0	The service response indicates that the service refuses to accept any data at the moment.
OK	
at^sisw0=9,12	Try to write 12 bytes.
^SISW: 9, 12, 0	The service response indicates that 12 bytes can be written.
Bye Bye Tom!	Write 12 bytes.
OK	
at^sisw=9,0,1	Set the <eodFlag> to mark the end of the email body.
^SISW: 9,0,0	The <eodFlag> is accepted by the service.
OK	
at^sisi=9	Check the connection state of service profile 9.
^SISI: 9,5,0,22,0,0	The command response confirms that the SMTP service is in state "5" (Closing) and that 22 bytes have been written.
OK	
at^sisi=9	Check the connection state of service profile 9.
^SISI: 9,6,0,22,0,0	The command response confirms that the SMTP service is in state "6" (Down) and that 22 bytes have been written.
OK	
at^sise=9	Check error status of service profile 9.
^SISE: 9,0	The command response confirms that no error occurred.
OK	

at^sisc=9 OK	Close the service.

10.12.11 Configuring POP3 Service Profile

First set up a connection profile as explained in Section 10.1.1 or Section 10.1.2. Enter at least all parameters which are mandatory for a GPRS profile. The example uses the connection profile ID 1 and the service profile ID 1. The service profile is set up to retrieve a specific email (email number 2).

at^siss=1,srvType,"Pop3" OK	Select service type POP3.
at^siss=1,conId,"1" OK	Select connection profile 1.
at^siss=1,address,"192.168.1.2" OK	Specify POP3 server address.
at^siss=1,user,"subscriber1" OK	Specify recipient's mailbox name.
at^siss=1,passwd,"subscr1" OK	Password used by recipient for authentication to POP3 server.
at^siss=1,pCmd,"3" OK	Command used to retrieve emails.
at^siss=1,pNumber,"2" OK	Email message number 2 shall be retrieved.
at^siss? ^SISS: 0, "srvType", "" ^SISS: 1, "srvType", "Pop3" ^SISS: 1, "conId", "1"	To check the profile enter the AT^SISS read command. The response includes the values of all 10 connection profiles. Service profile 1 contains the values specified above and the values automatically assumed by default.
^SISS: 1, "alphabet", "0"	Default: Character set enabled with AT+CSCS shall be used.
^SISS: 1, "address", "192.168.1.2" ^SISS: 1, "user", "subscriber1" ^SISS: 1, "passwd", "*******" ^SISS: 1, "pCmd", "3"	
^SISS: 1, "tcPort", "110"	Default: TCP port number commonly used for POP3.
^SISS: 1, "pNumber", "2"	
^SISS: 1, "pLength", "0"	Default: Message size shall not be limited.
^SISS: 1, "pDelFlag", "0"	Default: Retrieved message shall not be deleted on POP3 server.
^SISS: 1, "tcpMR", "10"	Default: Number of retransmission attempts for TCP packets is 10 (= default of AT^SCFG).
^SISS: 1, "tcpOT", "6000"	Default: Timeout before closing outstanding TCP connection is 6000 sec (= default of AT^SCFG).
^SISS: 2, "srvType", "" ^SISS: 3, "srvType", "" ^SISS: 4, "srvType", "" ^SISS: 6, "srvType", "" ^SISS: 7, "srvType", "" ^SISS: 8, "srvType", "" ^SISS: 9, "srvType", "" OK	

10.12.12 Retrieving Email (URC Mode)

This example uses the service profile described in Section 10.12.11.

```
at^siso=1                                   Open the service that was created to retrieve email
                                            number 2 from the POP3 server.
OK
^SISR: 1, 1                                 The "^SISR" indicates that data is available for read-
                                            ing.
at^sisr=1,500                               Try to read 500 bytes.
^SISR: 1, 500                               Command response indicates that 500 bytes will be
                                            transferred, i.e. there will be no other URC since the
                                            requested length equals the confirmed length.

Return-Path: <subscriber1@testdomain.com>
X-Original-To: subscriber1@testdomain.com
Delivered-To: subscriber2@testdomain.com
Received: from 10.10.0.132 (unknown [10.10.0.132])
by testdomain.com (Postfix) with SMTP id 379321D004
for <subscriber1@testdomain.com>; Tue, 20 Dec 2005 08:00:07 +0100 (CET)
To: subscriber2@testdomain.com
Cc:
From: subscriber1@testdomain.com
Subject: TestMail
Message-Id: <20051220070007.379321D004@testdomain.com >
Date: Tue, 20 Dec 2005 08:00:07 +0100
OK
at^sisr=1,500                               Try to read another 500 bytes.
at^sisr=1,78                                Command response indicates that only 78 bytes will
                                            transferred.

(CET)
X-UIDL: &lL"!(Z6"!^cl!!1+%"!
Status: RO

Hallo Tom!Bye Bye Tom!
.                                           Dot indicates end of mail according to RFC 2821.
OK
^SISR: 1, 2                                 Parameter <urcCauseId> of the "^SISR" URC
                                            confirms that all data is transferred successfully.
at^sisc=1                                   Close the service.
OK
```

10.12.13 Retrieving Email (Polling Mode)

This example uses the service profile described in Section 10.12.11.

```
at^siso=1                                   Open the service that was created to retrieve email
                                            number 2 from the POP3 server.
OK
at^sisr=1,1000                              Try to read 1000 bytes.
^SISR: 1, 0                                 Command response indicates that currently no data
                                            is available.
OK
at^sisr=1,1000                              Again, try to read 1000 bytes.
^SISR: 1, 0                                 Command response indicates that currently no data
                                            is available.
OK
at^sisr=1,1000                              Again, try to read 1000 bytes.
```

^SISR: 1, 578	Command response indicates that 578 bytes are available for reading.
Return-Path: <subscriber1@testdomain.com> X-Original-To: subscriber1@testdomain.com Delivered-To: subscriber2@testdomain.com Received: from 10.10.0.132 (unknown [10.10.0.132]) by testdomain.com (Postfix) with SMTP id 379321D004 for <subscriber1@testdomain.com>; Tue, 20 Dec 2005 08:00:07 +0100 (CET) To: subscriber2@testdomain.com Cc: From: subscriber1@testdomain.com Subject: TestMail Message-Id: <20051220070007.379321D004@testdomain.com > Date: Tue, 20 Dec 2005 08:00:07 +0100 (CET) X-UIDL: &lL"!(Z6"!^cl!!1+%"! Status: RO Hallo Tom!Bye Bye Tom!	
.	Dot indicates end of mail according to RFC 2821.
OK	
at^sisr=1,1000	Try to read 1000 bytes once again.
^SISR: 1,-2	No more data available to read, i.e. the service has finished.
OK	
at^sisi=1	Check the connection state of service profile 1.
^SISI: 1,6,578,0,0,0 OK	The command response indicates that the POP3 service is in state "6" (Down) and that 578 bytes have been retrieved.
at^sise=1	Check error status of service profile 1.
^SISE: 1,0	The command response confirms that no error occurred.
OK	
at^sisc=1	Close the service.
OK	

10.12.14 HTTP POST (Polling Mode)

at^siss=1,srvType,"Http"	Select service type HTTP.
OK	
at^siss=1,conId,1	Select connection profile 1.
OK	
at^siss=1,hcMethod,1	Select "Post" method.
OK	
at^siss=1,address,"http://192.168.1.3/datafiles/dummy/dummy.txt"	
OK	
at^siss=1,hcContLen,180	Try to upload 180 bytes.
OK	
at^siso=1	Open the service.
OK	
at^sisw=1,100	Send the first 100 bytes.
^SISW: 1, 100, 0	
OK	
at^sisw=1,100	Try to send again 100 bytes.
^SISW: 1, 80, 0	80 bytes are sent.
OK	
at^sisw=1,40	Try to write data once again.

^SISW: 1, 0, 0	No further data available, i.e. the service has finished.
OK	
at^sisi?	
^SISI: 1,6,0,180,0,0	The command response indicates that HTTP service is in state "6" (Down) and that 180 bytes have been sent.
OK	
at^sise=1	Check error status of service profile 1.
^SISE: 1,0	The command response confirms that no error occurred.
OK	
at^sisc=1	Close the service.
OK	

10.12.15 HTTP GET (Polling Mode)

at^siss=0,srvType,"Http"	Select service type HTTP.
OK	
at^siss=0,conId,1	Select connection profile 1.
OK	
at^siss=0,hcMethod,0	
OK	
at^siss=0,address,http://192.168.1.4/	
OK	
at^siso=0	
OK	
at^sisr=0,1500	Start reading data in polling mode.
^SISR: 0, 1264	
...DATA...	
OK	
at^sisr=0,1500	
^SISR: 0, 1500	
...DATA...	
OK	
at^sisr=0,1500	
^SISR: 0, 602	
...DATA...	
OK	
at^sisr=0,1500	Again, try to read 1500 bytes.
^SISR: 0, -2	No more data to read, i.e. the service has finished.
OK	
at^sisi?	
^SISI: 0,6,0,3366,0,0	The command response indicates that the HTTP service is in state "6" (Down) and that 3366 bytes have been read.
OK	
at^sise=0	Check error status of service profile 0.
^SISE: 0,0	The command response confirms that no error occurred.
OK	
at^sisc=0	Close the service.
OK	

10.12.16 Creating Transparent TCP Socket Client

at^siss=1,srvType,"Transparent"	Select service type "Transparent".
OK	
at^siss=1,conId,1	Select connection profile 1.
OK	
at^siss=1,address,"10.10.0.110:9996:timer=200"	Specify server address.
OK	

10.12.17 Opening and Closing Transparent TCP Service

at^siso=1	Open Transparent TCP service.
OK	
^SISW: 1,1	URC indicates that Transparent TCP service is ready.
at^sist=1	Open transparent access mode.
CONNECT	Service is ready to send or receive data. Client is sending data, e.g Good Morning (not visible in example). Client types +++ to return to AT command mode (+++ not visible in example).
OK	
at^sisi=1	Check the service state of service profile 1.
^SISI: 1,4,0,16,16,0	Service is in state "Up" (4). 0 bytes received, 16 bytes sent and acknowledged.
OK	
at^siso?	Check the service state of service profile 1.
^SISO: 0, ""	
^SISO: 1, "Transparent","4","2","0","16","10.10.0.200:1024","10.10.0.108:65532"	Service is in state "Up" (4). Socket is assigned. 0 bytes received, 16 bytes sent. Local and remote IP address are assigned.
^SISO: 2, ""	
^SISO: 3, ""	
^SISO: 4, ""	
^SISO: 5, ""	
^SISO: 6, ""	
^SISO: 7, ""	
^SISO: 8, ""	
^SISO: 9, ""	
OK	
at^sici?	Check the state of the Internet connection profile.
^SICI: 0,2,1,"10.10.0.200"	Internet connection profile is in state "Up". Local IP address is assigned.
OK	
at^sisc=1	Close the service.
OK	
at^sisi=1	Check the service state of service profile 1.
^SISI: 1,2,0,0,0,0	Service profile 1 is in state "Allocated" (2).
OK	
at^siso?	Check the service state of service profile 1.
^SISO: 0, ""	
^SISO: 1, "Transparent","2","1","0","0","0.0.0.0:0","0.0.0.0:0"	Service is in state "Allocated" (2). Socket not assigned.

^SISO: 2, ""	
^SISO: 3, ""	
^SISO: 4, ""	
^SISO: 5, ""	
^SISO: 6, ""	
^SISO: 7, ""	
^SISO: 8, ""	
^SISO: 9, ""	
OK	
at^sici?	Check the state of the Internet connection profile.
^SICI: 0,0,0,"0.0.0.0"	No Internet connection profile currently used.
OK	

10.12.18 Server Disconnects While Transparent TCP Service is in Transparent Access Mode

at^siso=1	Open Transparent TCP service.
OK	
^SISW: 1,1	URC indicates that Transparent TCP service is ready.
at^sist=1	Open transparent access mode.
CONNECT	Service is ready to send or receive data.
Good Morning NO CARRIER	Server has sent data and disconnected. Client reads data. Then client gets NO CARRIER in AT command mode.
at^sisi=1	Check the service state of service profile 1.
^SISI: 1,6,12,0,0,0	Service is in state "Down" (6). 12 bytes received.
OK	
at^siso?	Check the service state of service profile 1.
^SISO: 0, ""	
^SISO: 1, "Transpar-ent","6","2","12","0","10.10.0.200:1026","10.10.0.108:65532"	Service is in state "Down" (6). Socket is assigned. 6 bytes received. 12 bytes sent. Local and remote IP address are assigned.
^SISO: 2, ""	
^SISO: 3, ""	
^SISO: 4, ""	
^SISO: 5, ""	
^SISO: 6, ""	
^SISO: 7, ""	
^SISO: 8, ""	
^SISO: 9, ""	
OK	
at^sici?	Check the state of the Internet connection profile.
^SICI: 0,2,1,"10.10.0.200"	Internet connection profile is in state "Up". Local IP address is assigned.
OK	
at^sisc=1	Close the service.
OK	
at^sisi=1	Check the service state of service profile 1.
^SISI: 1,2,0,0,0,0	Service profile 1 is in state "Allocated" (2).
OK	

10.12.19 Server Disconnects While Transparent TCP Service is in AT Command Mode

at^siso=1	Open Transparent TCP service.
OK	
^SISW: 1,1	URC indicates that Transparent TCP service is ready.
^SIS: 1, 0, 15	<urcInfoId> 15: Remote host has reset the connection. This means that the server has released the connection to Transparent TCP Socket client.
^SIS: 1, 0, 19	<urcInfoId> 19: Socket has been shut down.
at^sisi?	Check service state of service profile 1.
^SISI: 1,6,0,0,0,0	Service is in service "Down" state (6). No data pending.
OK	
at^sisc=1	Close the service.
OK	
at^sisi=1	Check service state of service profile 1.
OK	
^SISI: 1,2,0,0,0,0	Service profile 1 is in state "Allocated" (2).

10.12.20 Server Disconnects While Transparent TCP Service is in AT Command Mode and Data is Pending

at^siso=1	Open Transparent TCP service.
OK	
^SISW: 1,1	URC indicates that Transparent TCP service is ready.
^SIS: 1, 0, 15	<urcInfoId> 15: Remote host has reset the connection. This means that the server has released the connection to Transparent TCP Socket client.
^SIS: 1, 0, 19	<urcInfoId> 19: Socket has been shut down.
at^sisi?	Check service state of service profile 1.
^SISI: 1,5,0,0,0,0	Service is in service "Closing" state (5).
OK	
at^sist=1	Open transparent access mode.
CONNECT	Service is ready to send or receive data.
...DATA...	Client is sending data.
+++	Client types +++ to return to AT command mode.
OK	
at^sisc=1	Close the service.
OK	
at^sisi=1	Check service state of service profile 1.
OK	
^SISI: 1,2,0,0,0,0	Service profile 1 is in state "Allocated" (2).
OK	

11. GPRS Commands

The AT Commands described in this chapter allow the external application to control packet switched services. Please use chapter "Using GPRS AT commands (Examples)" as a first guidance.

11.1 AT+CGACT PDP context activate or deactivate

Syntax

Test Command
AT+CGACT=?
Response(s)
+CGACT: (list of supported <state>s) OK

Read Command
AT+CGACT?
Response(s)
+CGACT: <cid>, <state> [+CGACT: <cid>, <state>] ... OK

Write Command
AT+CGACT=[<state>[, <cid>[, <cid>]]]
Response(s)
OK ERROR +CME ERROR: <err>

PIN	ASC0	ASC1	MUX1	MUX2	MUX3	Last
+	+	+	+	+	+	-

Reference(s)

GSM 07.07

Command Description

The test command is used for requesting information on the supported PDP context activation states.

The read command returns the current activation states for all the defined PDP contexts.

The write command is used to activate or deactivate the specified PDP context(s). After the command has completed, the MT remains in V.250 command state. If any PDP context is already in the requested state, the state for that context remains unchanged. If the MT is not GPRS attached when the activation form of the command is executed, the MT first performs a GPRS attach and then attempts to activate the specified contexts. If no <cid>s are specified the activation/deactivation form of the command activates/deactivates all defined contexts.
If the MT is not able to activate a context because of a failed attach, the command returns "ERROR" or "+CME ERROR: unknown" after 385 seconds (timer T3310 expired).
If the MT is attached but is not able to activate a context for more than 160 seconds (timer T3380 expired), command returns "ERROR" or "+CME ERROR: unspecified GPRS error". In this case AT+CEER returns "+CEER: 51,3,0".
The command should not be used to deactivate a PDP context during the implicit PDP context deactivation procedure which is started automatically after LCP termination or by dropping the DTR line (if AT&D2 is configured). For details refer to Section 11.5.1, Automatic deactivation of PDP context during dial-up PPP.

Parameter Description

`<state>`(num)

Indicates the state of PDP context activation.

0	deactivated
[1]	activated

`<cid>`(num)

PDP Context Identifier is a numeric parameter which specifies a particular PDP context definition. The parameter is local to the TE-MT interface and is used in other PDP context related commands.

1...2

Notes

- ATH will deactivate any PDP context.
- If the MT is in dedicated mode, the write command returns "+CME ERROR: operation temporary not allowed".
- A maximum of 2 contexts can be activated at the same time, no matter on which interface. Trying to activate more than 2 contexts will cause "+CME ERROR: operation temporary not allowed". Note that, depending on the provider, the number of activated contexts may be further restricted. In such cases "+CME ERROR: unspecified GPRS error" will be returned and AT+CEER returns "+CEER: 50,26,0".
  Remember that contexts may be activated implicitly by using the ATD*98# or ATD*99# GPRS compatibility commands without specifying a <cid>.
- If an activated context will be deactivated without using the command AT+CGACT, then the result code "NO CARRIER" will be issued to indicate the context deactivation. This happens for example if the context deactivation is forced by the network or if deactivation results from a network deregistration with AT+COPS=2.

11.2 AT+CGANS Manual response to a network request for PDP context activation

Syntax

Test Command

```
AT+CGANS=?
```

Response(s)

```
+CGANS: (list of supported <response>s), (list of supported <L2P>s)
OK
```

Write Command

```
AT+CGANS=[<response>[, <L2P>[, <cid>]]]
```

Response(s)

```
CONNECT
NO CARRIER
ERROR
+CME ERROR: <err>
```

PIN	ASC0	ASC1	MUX1	MUX2	MUX3		Last
+	+	+	+	+	+	-	+

Reference(s)

3GPP 27.007

Command Description

The write command requests BGS2-E to respond to a network request for Packet Domain PDP context activation which has been signaled to the TE by the "RING" or "+CRING: GPRS" URC. The <response> parameter allows the TE to accept or reject the request.

Parameter Description

<response>(num)

[0]	the request is rejected and BGS2-E returns OK to the TE
1	accept the request

<L2P>(str)

a string parameter which indicates the layer 2 protocol to be used (see AT+CGDATA command)

<cid>(num)

a numeric parameter which specifies a particular PDP context definition (see AT+CGDCONT command).

Note

- If <response> is 1, the following procedure is followed by BGS2-E:
  If the <L2P> parameter value is unacceptable to BGS2-E, then it will return an "ERROR" or "+CME ERROR: <err>" response. Otherwise, BGS2-E issues the intermediate result code CONNECT and enters V.250 online data state.
  A <cid> may be specified for use in the context activation request.
  During the PDP startup procedure BGS2-E has the PDP type and the PDP address provided by the network in the Request PDP context activation message. If this is in conflict with the information provided by a specified <cid>, the command will fail. There will be no conflict, if the PDP type matches exactly and the PDP address given by the context definition for <cid> is empty or matches exactly with the address specified with the network PDP context activation message.
  The context will be activated using the values for PDP type and address provided by the network, together with all other information found in the PDP context definition.
  If no <cid> is given or if there is no matching context definition, BGS2-E will attempt to activate the context

using the values for PDP type and address provided by the network. The other parameters will be set to their default values (see AT+CGDCONT).
If activation is successful, data transfer will proceed.
After data transfer is complete, and the layer 2 protocol termination procedure has completed successfully, the V.250 command state is reentered and BGS2-E returns the final result code OK.
In the event of an erroneous termination or a failure to start up, the V.250 command state is re-entered and BGS2-E returns the final result code NO CARRIER, or if enabled, "+CME ERROR: <err>". Attach, activate and other errors may be reported. It is also an error to issue the AT+CGANS command when there is no pending network request.
The command can be used in both normal and modem compatibility modes.

11.3 AT+CGATT GPRS attach or detach

Syntax

Test Command
AT+CGATT=?
Response(s)
+CGATT: (list of supported <state>s) OK
Read Command
AT+CGATT?
Response(s)
+CGATT: <state> OK
Write Command
AT+CGATT=[<state>]
Response(s)
OK ERROR +CME ERROR: <err>

PIN	ASC0	ASC1	MUX1	MUX2	MUX3	Last
+	+	+	+	+	+	-

Reference(s)

GSM 07.07

Command Description

The test command is used for requesting information on the supported GPRS service states.

The read command returns the current GPRS service state.

The write command is used to attach the MT to, or detach the MT from the GPRS service. After the command has completed, the MT remains in V.250 command state. If the MT is already in the requested state, the command is ignored and the OK response is returned. Any active PDP contexts will be automatically deactivated when the attachment state changes to detached.
If the MT is not able to attach for more than 5 minutes, command returns "ERROR" or "+CME ERROR: unknown", but MT is still trying to attach.
If the MT is not able to detach for more than 80 seconds, command returns "ERROR" or "+CME ERROR: unknown", but MT is still trying to detach. If an attach is issued during a running detach, command returns "ERROR" or "+CME ERROR: unspecified GPRS error".

Parameter Description

<state>(num)

Indicates the state of GPRS attachement.

0(P)	detached
[1]	attached

Notes

- If the MT is in dedicated mode, write command returns "+CME ERROR: operation temporary not allowed".
- When the module is GPRS attached and a PLMN reselection occurs to a non-GPRS network or to a network where the SIM is not subscribed to for using GPRS, the resulting GMM (GPRS mobility management) state according to GSM 24.008 is REGISTERED/NO CELL, meaning that the read command will still show <state>=1.

11.4 AT+CGAUTO Automatic response to a network request for PDP context activation

Syntax

Test Command
AT+CGAUTO=?
Response(s)
+CGAUTO: (list of supported <n>s) OK

Read Command
AT+CGAUTO?
Response(s)
+CGAUTO: <n> OK

Write Command
AT+CGAUTO=[<n>]
Response(s)
OK ERROR +CME ERROR: <err>

PIN	ASC0	ASC1	MUX1	MUX2	MUX3		Last
+	+	+	+	+	+	-	-

Reference(s)
GSM 07.07

Command Description

The test command returns the values of <n> supported by the MT as a compound value.

The write command disables or enables an automatic positive response (auto-answer) to the receipt of a Request PDP Context Activation message from the network. It also provides control over the use of the V.250 basic commands ATS0, ATA and ATH for handling network requests for PDP context activation.

Parameter Description

<n>(num)	
0	Disable automatic response for network requests for GPRS PDP context activation. GPRS network requests are manually accepted or rejected by the AT+CGANS command.
1	Enable automatic response for network requests for GPRS PDP context activation. GPRS requests are automatically accepted according to the description below.
3(&F)(P)	Modem compatibility mode. The automatic acceptance of both GPRS and incoming CSD calls is controlled by the ATS0 command. Manual control uses the ATA and ATH commands, respectively, to accept or reject GPRS network requests or incoming CSD calls.

Notes

- It is allowed to have different AT+CGAUTO settings on different interfaces.
- When the AT+CGAUTO=0 command is received, the MT will not perform a GPRS detach if it is attached. Subsequently, when the MT announces a network request for PDP context activation by issuing the URC RING or CRING, the TE may manually accept or reject the request by issuing the AT+CGANS command or may simply ignore the network request.

- When the AT+CGAUTO=1 command is received, the MT will attempt to perform a GPRS attach if it is not yet attached. Failure will result in ERROR or, if enabled +CME ERROR being returned to the TE. Subsequently, the MT announces a network request for PDP context activation by issuing the URC RING to the TE, followed by the intermediate result code CONNECT. The MT then enters V.250 online data state and follows the same procedure as it would after having received a +CGANS=1 with no <L2P> or <cid> values specified.
- If a GPRS attach will be initiated by this command and the MT is not able to attach for more than 385 seconds (timer T3310 expired), command returns with "ERROR" or "+CME ERROR: unknown", but MT is still trying to attach and the requested automatic mode <n> is in use.
- If a network request for PDP context activation is answered automatically and if another AT command is issued at the same time on the same interface, then this AT command is not executed. Any response belongs to the automatic context activation procedure. If the AT command which caused the collision was a circuit switched data call, the CONNECT response does not belong to this data call but to the GPRS. This can be detected if ATX is not set to 0. CS data call will issue CONNECT <text>, GPRS will issue CONNECT only.

11.5 AT+CGDATA Enter data state

Syntax

Test Command

AT+CGDATA=?

Response(s)

+CGDATA: (list of supported <L2P>s)
OK

Write Command

AT+CGDATA=[<L2P>[, <cid>[, <cid>]]]

Response(s)

CONNECT
NO CARRIER
ERROR
+CME ERROR: <err>

PIN	ASC0	ASC1	MUX1	MUX2	MUX3	Last
+	+	+	+	+	+	-	+

Reference(s)

GSM 07.07

Command Description

The test command is used for requesting information on the supported layer 2 protocols to be used between the TE and MT.

The write command causes the MT to perform all actions which are necessary to establish communication between the TE and the network using one or more GPRS PDP types. This may include performing a GPRS attach and one or more PDP context activations. Commands following the AT+CGDATA command in the AT command line will not be processed by the MT.
If no <cid> is given or if there is no matching context definition, the MT will attempt to activate the context with PDP type IP and all other context parameters set to their default values (see AT+CGDCONT, AT+CGQREQ, AT+CGQMIN).
If the <L2P> parameter is omitted, the layer 2 protocol is unspecified and PPP will be used.
If the write command is successful, the MT issues the intermediate result code CONNECT and enters V.250 online data state.
After data transfer is complete, and the layer 2 protocol termination procedure has completed successfully, the command state is reentered and the MT returns the final result code OK.
If the <L2P> parameter value is unacceptable to the MT, the MT returns ERROR or +CME ERROR.
In the event of erroneous termination or a failure to start up, the command state is reentered and the MT returns NO CARRIER, or if enabled +CME ERROR.

Parameter Description

<L2P>(str)

Layer 2 protocol to be used between the TE and MT.

[“PPP“]	layer 2 protocol PPP

<cid>(num)

Parameter specifies a particular PDP context definition. The parameter is local to the TE-MT interface and is used in other PDP context-related commands.

1...2

Notes

- If the MT is in dedicated mode, write command returns "+CME ERROR: operation temporary not allowed".
- It is possible to leave the GPRS data mode and enter the command mode by using the V.250 command +++. By using the command AT+CGDATA again, the data mode is reentered. Which context is used to return to data mode, depends on the supplied parameter <cid>.
  If no <cid> is specified, this is equivalent to using the V.250 command ATO, which is usable for GPRS connections too. In this case the first context will be used, which is active and already in data mode since it has been activated (the internal context used for GPRS connection without explicitly specifiying a context identifier has the highest priority).
  It is possible to use AT+CGDATA to enter the data mode for a context, which is not yet in data mode since it has been activated. With ATO this is not possible.

11.5.1 Automatic deactivation of PDP context during dial-up PPP

When using the AT+CGDATA write command or ATD*99# or ATD*98# the MT issues the intermediate result code CONNECT and enters V.250ter online data state. In V.250 online data state, first some LCP protocol exchange between MT and TE is performed to set up the PPP link. After successfully establishing the PPP link, the MT performs the PDP context activation procedure if the context is not already activated. As a result, the MT is in a "PDP context activated" state within the PLMN, the PPP link is established on the mobile side and the mobile is ready for IP data transfer.
If the TE wants to close the LCP link the MT may perform an LCP termination request procedure on PPP level. After this LCP termination procedure the MT deactivates the PDP context automatically and the MT returns to V.250 command mode and issues the final result code NO CARRIER.
During the implicit PDP context deactivation procedure after LCP termination the TE may change into V.250 command state (e.g. by using +++ or by toggling DTR if AT&D is set to 1) before the result NO CARRIER occurs. In this case the application should not try to deactivate the PDP context by using the commands AT+CGACT or ATH. If DTR is configured to disconnect data connections (AT&D2), then the application should not toggle DTR during the implicit PDP context deactivation and before "NO CARRIER" is received.

11.6 AT+CGDCONT Define PDP Context

Syntax

Test Command

AT+CGDCONT=?

Response(s)

+CGDCONT: (range of supported<cid>s), <PDP_type>, , , (list of supported <d_comp>s), (list of supported <h_comp>s)
OK
ERROR
+CME ERROR: <err>

Read Command

AT+CGDCONT?

Response(s)

[+CGDCONT: <cid>, <PDP_type>, <APN>, <PDP_addr>, <d_comp>, <h_comp>]
[+CGDCONT: ...]
OK
ERROR
+CME ERROR: <err>

Write Command

AT+CGDCONT=[<cid>[, <PDP_type>[, <APN>[, <PDP_addr>]]]]

Response(s)

OK
ERROR
+CME ERROR: <err>

PIN	ASC0	ASC1	MUX1	MUX2	MUX3		Last
+	+	+	+	+	+	-	-

Reference(s)

GSM 07.07

Command Description

The test command returns supported values as a compound value.

The read command returns the current settings for each defined PDP context.

The write command specifies the parameters for a PDP context identified by the context identifier <cid>. The number of contexts that may be in a defined state at the same time is given by the range returned by the test command. A special form of the write command (AT+CGDCONT=<cid>) causes the values for context <cid> to become undefined.

Parameter Description

<cid>(num)

PDP Context Identifier

Parameter specifies a particular PDP context definition. The parameter is local to the TE-MT interface and is used in other PDP context-related commands.

1...2

<PDP_type>(str)

Packet Data Protocol type

Specifies the type of the packet data protocol.

“IP“	Internet Protocol (IETF STD 5)

`<APN>`(str)

Access Point Name

The logical name that is used to select the GGSN or the external packet data network. If the value is null or omitted, then the subscription value will be requested.

`<PDP_addr>`(str)

Packet Data Protocol address

Identifies the MT in the address space applicable to PDP (e.g. IP V4 address for PDP type IP). If the value is null or omitted, then a value may be provided by the TE during the PDP startup procedure or, failing that, a dynamic address will be requested. The read command will continue to return the null string even if an address has been allocated during the PDP startup procedure. The allocated address may be read using AT+CGPADDR.

`<d_comp>`(num)

Data Compression

Controls the PDP data compression (applicable for Subnetwork Dependent Convergence Protocol (SNDCP) only) 3GPP TS 44.065

[0] off

`<h_comp>`(num)

Header Compression

Controls the PDP header compression 3GPP TS 44.065, 3GPP TS 25.323

[0] off

Notes

- The MT supports PDP type IP only.
- On ASC0 all context definitions will be stored non volatile. On all other instances only the settings of context 1 are stored non volatile.

11.7 AT+CGEQMIN Rel. 99 Quality of Service Profile (Minimum acceptable)

Syntax

Test Command

AT+CGEQMIN=?

Response(s)

+CGEQMIN: <PDP_type>, (list of supported <Traffic class>s), (list of supported <Maximum bitrate UL>s), (list of supported <Maximum bitrate DL>s), (list of supported <Guaranteed bitrate UL>s), (list of supported <Guaranteed bitrate DL>s), (list of supported <Delivery order>s), (list of supported <Maximum SDU size>s), (list of supported <SDU error ratio>s), (list of supported <Residual bit error ratio>s), (list of supported <Delivery of erroneous SDUs>s), (list of supported <Transfer delay>s), (list of supported <Traffic handling priority>s)
OK

Read Command

AT+CGEQMIN?

Response(s)

[+CGEQMIN: <cid>, <Traffic class>, <Maximum bitrate UL>, <Maximum bitrate DL>, <Guaranteed bitrate UL>, <Guaranteed bitrate DL>, <Delivery order>, <Maximum SDU size>, <SDU error ratio>, <Residual bit error ratio>, <Delivery of erroneous SDUs>, <Transfer delay>, <Traffic handling priority>]
[+CGEQMIN: ...]

Write Command

AT+CGEQMIN=[<cid>[, <Traffic class>[, <Maximum bitrate UL>[, <Maximum bitrate DL>[, <Guaranteed bitrate UL>[, <Guaranteed bitrate DL>[, <Delivery order>[, <Maximum SDU size>[, <SDU error ratio>[, <Residual bit error ratio>[, <Delivery of erroneous SDUs>[, <Transfer delay>[, <Traffic handling priority>]]]]]]]]]]]]]

Response(s)

OK
ERROR
+CME ERROR: <err>

PIN	ASC0	ASC1	MUX1	MUX2	MUX3	Last	
+	+	+	+	+	+	-	-

Reference(s)

3GPP TS 27.007

Command Description

The test command returns values supported as a compound value.

The read command returns the current settings for each defined context.

The write command allows the TE to specify a Quality of Service Profile for the context identified by the (local) context identification parameter <cid> which is checked by the MT against the negotiated profile returned in the Activate/Modify PDP Context Accept message.
A special form of the write command, AT+CGEQMIN=<cid> causes the requested profile for context number <cid> to become undefined.
On ASC0 all QoS profiles will be stored non volatile. On all other instances only the QoS settings for context 1 are stored non volatile.

Parameter Description

<cid>(num)

Parameter specifies a particular PDP context definition. The parameter is local to the TE-MT interface and is used in other PDP context-related commands.

1...2

<Traffic class>(num)	
0	conversational
1	streaming
2	interactive
3	background
[4]	subscribed value

<Maximum bitrate UL>(num)	

This parameter indicates the maximum number of kbits/s delivered to UMTS (up-link traffic) at a SAP. As an example a bitrate of 32kbit/s would be specified as 32 (e.g. AT+CGEQMIN=...,32,...).

[0]	subscribed value
1...63	
64...568	(value needs to be divisible by 8 without remainder)
576...8640	(value needs to be divisible by 64 without remainder)

<Maximum bitrate DL>(num)	

This parameter indicates the maximum number of kbits/s delivered by UMTS (down-link traffic) at a SAP. As an example a bitrate of 32kbit/s would be specified as 32 (e.g. AT+CGEQMIN=...,32,...).

[0]	subscribed value
1...63	
64...568	(value needs to be divisible by 8 without remainder)
576...8640	(value needs to be divisible by 64 without remainder)

<Guaranteed bitrate UL>(num)	

This parameter indicates the guaranteed number of kbits/s delivered to UMTS (up-link traffic) at a SAP (provided that there is data to deliver). As an example a bitrate of 32kbit/s would be specified as 32 (e.g. AT+CGEQMIN=...,32,...).

[0]	subscribed value
1...63	
64...568	(value needs to be divisible by 8 without remainder)
576...8640	(value needs to be divisible by 64 without remainder)

<Guaranteed bitrate DL>(num)	

This parameter indicates the guaranteed number of kbits/s delivered by UMTS (down-link traffic) at a SAP (provided that there is data to deliver). As an example a bitrate of 32kbit/s would be specified as 32 (e.g. AT+CGEQMIN=...,32,...).

[0]	subscribed value
1...63	
64...568	(value needs to be divisible by 8 without remainder)
576...8640	(value needs to be divisible by 64 without remainder)

<Delivery order>(num)	

This parameter indicates whether the UMTS bearer shall provide in-sequence SDU delivery or not.

0	no

1	yes
[2]	subscribed value

`<Maximum SDU size>`(num)

This parameter indicates the maximum allowed SDU size in octets.

[0]	subscribed value
10...1520	(value needs to be divisible by 10 without remainder)
1502	

`<SDU error ratio>`(str)

This parameter indicates the target value for the fraction of SDUs lost or detected as erroneous. SDU error ratio is defined only for conforming traffic. The value is specified as "mEe". As an example a target SDU error ratio of $5*10^{-3}$ would be specified as "5E3" (e.g. AT+CGEQMIN=...,"5E3",...).

[“0E0“]	subscribed value
“1E2“	
“7E3“	
“1E3“	
“1E4“	
“1E5“	
“1E6“	
“1E1“	

`<Residual bit error ratio>`(str)

This parameter indicates the target value for the undetected bit error ratio in the delivered SDUs. If no error detection is requested, Residual bit error ratio indicates the bit error ratio in the delivered SDUs. The value is specified as "mEe". As an example a target residual bit error ratio of $5*10^{-3}$ would be specified as "5E3" (e.g. AT+CGEQMIN=...,"5E3",...).

[“0E0“]	subscribed value
“5E2“	
“1E2“	
“5E3“	
“4E3“	
“1E3“	
“1E4“	
“1E5“	
“1E6“	
“6E8“	

`<Delivery of erroneous SDUs>`(num)

This parameter indicates whether SDUs detected as erroneous shall be delivered or not.

0	no
1	yes
2	no detect
[3]	subscribed value

`<Transfer delay>`(num)

This parameter indicates the targeted time between request to transfer an SDU at one SAP to its delivery at the other SAP, in milliseconds.

[0]	subscribed value
10...150	(value needs to be divisible by 10 without remainder)
200...950	(value needs to be divisible by 50 without remainder)
1000...4000	(value needs to be divisible by 100 without remainder)

`<Traffic handling priority>`(num)

This parameter specifies the relative importance for handling of all SDUs belonging to the UMTS bearer compared to the SDUs of the other bearers.

[0]	subscribed
1	
2	
3	

`<PDP_type>`(str)

Packet Data Protocol Type

“IP“

Notes

- If parameters are not defined, the parameter default values depend on the HLR-stored subscribed default values.
- Definitions of parameters can be found in 3GPP TS 23.107
- If QOS settings are configured with `AT+CGQMIN` and `AT+CGEQMIN` in parallel the MT will use only the `AT+CGEQMIN` settings for connection setup while the `AT+CGQMIN` settings are ignored.

11.8 AT+CGEQREQ Rel. 99 Quality of Service Profile (Requested)

Syntax

Test Command

AT+CGEQREQ=?

Response(s)

+CGEQREQ: <PDP_type>, (list of supported <Traffic class>s), (list of supported <Maximum bitrate UL>s), (list of supported <Maximum bitrate DL>s), (list of supported <Guaranteed bitrate UL>s), (list of supported <Guaranteed bitrate DL>s), (list of supported <Delivery order>s), (list of supported <Maximum SDU size>s), (list of supported <SDU error ratio>s), (list of supported <Residual bit error ratio>s), (list of supported <Delivery of erroneous SDUs>s), (list of supported <Transfer delay>s), (list of supported <Traffic handling priority>s)

OK

Read Command

AT+CGEQREQ?

Response(s)

[+CGEQREQ: <cid>, <Traffic class>, <Maximum bitrate UL>, <Maximum bitrate DL>, <Guaranteed bitrate UL>, <Guaranteed bitrate DL>, <Delivery order>, <Maximum SDU size>, <SDU error ratio>, <Residual bit error ratio>, <Delivery of erroneous SDUs>, <Transfer delay>, <Traffic handling priority>]

[+CGEQREQ: ...]

Write Command

AT+CGEQREQ=[<cid>[, <Traffic class>[, <Maximum bitrate UL>[, <Maximum bitrate DL>[, <Guaranteed bitrate UL>[, <Guaranteed bitrate DL>[, <Delivery order>[, <Maximum SDU size>[, <SDU error ratio>[, <Residual bit error ratio>[, <Delivery of erroneous SDUs>[, <Transfer delay>[, <Traffic handling priority>]]]]]]]]]]]]]

Response(s)

OK

ERROR

+CME ERROR: <err>

PIN	ASC0	ASC1	MUX1	MUX2	MUX3	Last
+	+	+	+	+	+	-	-

Reference(s)

3GPP TS 27.007

Command Description

The test command returns values supported as a compound value.

The read command returns the current settings for each defined context.

The write command allows the TE to specify a Quality of Service Profile for the context identified by the (local) context identification parameter <cid> which is used when the MT sends an Activate PDP Context Request message to the network.
A special form of the write command, AT+CGEQREQ=<cid> causes the requested profile for context number <cid> to become undefined.
On ASC0 all QoS profiles will be stored non volatile. On all other instances only the QoS settings for context 1 are stored non volatile.

Parameter Description

<cid>(num)

Parameter specifies a particular PDP context definition. The parameter is local to the TE-MT interface and is used in other PDP context-related commands.

1...2

<Traffic class>(num)	
0	conversational
1	streaming
2	interactive
3	background
[4]	subscribed value

<Maximum bitrate UL>(num)	

This parameter indicates the maximum number of kbits/s delivered to UMTS (up-link traffic) at a SAP. As an example a bitrate of 32kbit/s would be specified as 32 (e.g. AT+CGEQREQ=...,32,...).

[0]	subscribed value
1...63	
64...568	(value needs to be divisible by 8 without remainder)
576...8640	(value needs to be divisible by 64 without remainder)

<Maximum bitrate DL>(num)	

This parameter indicates the maximum number of kbits/s delivered by UMTS (down-link traffic) at a SAP. As an example a bitrate of 32kbit/s would be specified as 32 (e.g. AT+CGEQREQ=...,32,...).

[0]	subscribed value
1...63	
64...568	(value needs to be divisible by 8 without remainder)
576...8640	(value needs to be divisible by 64 without remainder)

<Guaranteed bitrate UL>(num)	

This parameter indicates the guaranteed number of kbits/s delivered to UMTS (up-link traffic) at a SAP (provided that there is data to deliver). As an example a bitrate of 32kbit/s would be specified as 32 (e.g. AT+CGEQREQ=...,32,...).

[0]	subscribed value
1...63	
64...568	(value needs to be divisible by 8 without remainder)
576...8640	(value needs to be divisible by 64 without remainder)

<Guaranteed bitrate DL>(num)	

This parameter indicates the guaranteed number of kbits/s delivered by UMTS (down-link traffic) at a SAP (provided that there is data to deliver). As an example a bitrate of 32kbit/s would be specified as 32 (e.g. AT+CGEQREQ=...,32,...).

[0]	subscribed value
1...63	
64...568	(value needs to be divisible by 8 without remainder)
576...8640	(value needs to be divisible by 64 without remainder)

<Delivery order>(num)	

This parameter indicates whether the UMTS bearer shall provide in-sequence SDU delivery or not.

0	no

1	yes
[2]	subscribed value

<Maximum SDU size>(num)

This parameter indicates the maximum allowed SDU size in octets.

[0]	subscribed value
10...1520	(value needs to be divisible by 10 without remainder)
1502	

<SDU error ratio>(str)

This parameter indicates the target value for the fraction of SDUs lost or detected as erroneous. SDU error ratio is defined only for conforming traffic. The value is specified as "mEe". As an example a target SDU error ratio of $5*10^{-3}$ would be specified as "5E3" (e.g. AT+CGEQREQ=...,"5E3",...).

[“0E0“]	subscribed value
“1E2“	
“7E3“	
“1E3“	
“1E4“	
“1E5“	
“1E6“	
“1E1“	

<Residual bit error ratio>(str)

This parameter indicates the target value for the undetected bit error ratio in the delivered SDUs. If no error detection is requested, Residual bit error ratio indicates the bit error ratio in the delivered SDUs. The value is specified as "mEe". As an example a target residual bit error ratio of $5*10^{-3}$ would be specified as "5E3" (e.g. AT+CGEQREQ=...,"5E3",...).

[“0E0“]	subscribed value
“5E2“	
“1E2“	
“5E3“	
“4E3“	
“1E3“	
“1E4“	
“1E5“	
“1E6“	
“6E8“	

<Delivery of erroneous SDUs>(num)

This parameter indicates whether SDUs detected as erroneous shall be delivered or not.

0	no
1	yes
2	no detect
[3]	subscribed value

`<Transfer delay>`(num)

This parameter indicates the targeted time between request to transfer an SDU at one SAP to its delivery at the other SAP, in milliseconds.

[0]	subscribed value
10...150	(value needs to be divisible by 10 without remainder)
200...950	(value needs to be divisible by 50 without remainder)
1000...4000	(value needs to be divisible by 100 without remainder)

`<Traffic handling priority>`(num)

This parameter specifies the relative importance for handling of all SDUs belonging to the UMTS bearer compared to the SDUs of the other bearers.

[0]	subscribed
1	
2	
3	

`<PDP_type>`(str)

Packet Data Protocol Type

“IP“

Notes

- If parameters are not defined, the parameter default values depend on the HLR-stored subscribed default values.
- Definitions of parameters can be found in 3GPP TS 23.107
- If QOS settings are configured with `AT+CGQREQ` and `AT+CGEQREQ` in parallel the MT will use only the `AT+CGEQREQ` settings for connection setup while the `AT+CGQREQ` settings are ignored.

11.9 AT+CGEREP GPRS event reporting

The write command enables or disables sending of unsolicited result codes, "+CGEV" from MT to TE in the case of certain events occurring in the GPRS MT or the network. <mode> controls the processing of unsolicited result codes specified within this command. <bfr> controls the effect on buffered codes when <mode> 1 or 2 is entered. If a setting is not supported by the MT, ERROR or +CME ERROR: is returned.
Read command returns the current <mode> and buffer settings.
Test command returns the modes and buffer settings supported by the MT as compound values.

Syntax

Test Command

```
AT+CGEREP=?
```

Response(s)

```
+CGEREP: (list of supported <mode>s), (list of supported <bfr>s)
OK
```

Read Command

```
AT+CGEREP?
```

Response(s)

```
+CGEREP: <mode>, <bfr>
OK
```

Write Command

```
AT+CGEREP=[<mode>[, <bfr>]]
```

Response(s)

```
OK
ERROR
+CME ERROR: <err>
```

PIN	ASC0	ASC1	MUX1	MUX2	MUX3		Last
+	+	+	+	+	+	-	-

Reference(s)

GSM 07.07

Unsolicited Result Codes

URC 1

```
+CGEV: REJECT <PDP_type>, <PDP_addr>
```

A network request for PDP context activation occurred when the MT was unable to report it to the TE with a +CRING unsolicited result code and was automatically rejected.

URC 2

```
+CGEV: NW REACT <PDP_type>, <PDP_addr>, [<cid>]
```

The network has requested a context reactivation. The <cid> that was used to reactivate the context is provided if known to the MT.

URC 3

```
+CGEV: NW DEACT <PDP_type>, <PDP_addr>, [<cid>]
```

The network has forced a context deactivation. The <cid> that was used to activate the context is provided if known to the MT.

URC 4

```
+CGEV: ME DEACT <PDP_type>, <PDP_addr>, [<cid>]
```

The mobile equipment has forced a context deactivation. The <cid> that was used to activate the context is provided if known to the MT.

URC 5

+CGEV: NW DETACH

The network has forced a GPRS detach.

URC 6

+CGEV: ME DETACH

The mobile equipment has forced a GPRS detach.

URC 7

+CGEV: NW CLASS <class>

The network has forced a change of MS class. The highest available class is reported.

URC 8

+CGEV: ME CLASS <class>

The mobile equipment has forced a change of MS class. The highest available class is reported.

Parameter Description

<mode>(num)	
0(P)	Buffer unsolicited result codes in the MT. Currently 3 +CGEV URCs can be buffered. If MT result code buffer is full, the oldest ones will be discarded. No codes are forwarded to the TE.
1	Discard unsolicited result codes when MT TE link is reserved (e.g. in on line data mode); otherwise forward them directly to the TE.
2	Buffer unsolicited result codes in the MT when MT TE link is reserved (e.g. in on line data mode) and flush them to the TE when MT TE link becomes available; otherwise forward them directly to the TE. Currently 3 +CGEV URCs can be buffered. If MT result code buffer is full, the oldest URCs will be discarded.

<bfr>(num)	
0	MT buffer of unsolicited result codes defined within this command is cleared when <mode> 1 or 2 is entered
1	MT buffer of unsolicited result codes defined within this command is flushed to the TE when <mode> 1 or 2 is entered (OK response will be given before flushing the codes). Buffer is empty afterwards.

<class>(str)	
Parameter indicates the GPRS mobile class.	
“B“	class B

11.10 AT+CGPADDR Show PDP address

Syntax

Test Command

```
AT+CGPADDR=?
```

Response(s)

```
[+CGPADDR: (list of defined <cid>s)]
OK
```

Write Command

```
AT+CGPADDR=[<cid>[,<cid>]]
```

Response(s)

```
[+CGPADDR: <cid>, <PDP_address>]
[+CGPADDR: <cid>, <PDP_address>]
OK
ERROR
+CME ERROR: <err>
```

PIN	ASC0	ASC1	MUX1	MUX2	MUX3		Last
+	+	+	+	+	+	-	-

Reference(s)

GSM 07.07

Command Description

The test command returns a list of defined <cid>s.

The write command returns a list of PDP addresses for the specified context identifiers. If no <cid> is specified, the addresses for all defined contexts are returned.

Parameter Description

<cid>(num)

A numeric parameter which specifies a particular PDP context definition (see AT+CGDCONT command).

<PDP_address>(str)

A string that identifies the MT in the address space applicable to the PDP. The address may be static or dynamic.

Note

- If no <cid> is specified, the write command will return a list of all defined contexts.

11.11 AT+CGQMIN Quality of Service Profile (Minimum acceptable)

Syntax

Test Command

AT+CGQMIN=?

Response(s)

+CGQMIN: <PDP_type>, (list of supported <precedence>s), (list of supported <delay>s), (list of supported <reliability>s), (list of supported <peak>s), (list of supported <mean>s)
OK
ERROR
+CME ERROR: <err>

Read Command

AT+CGQMIN?

Response(s)

[+CGQMIN: <cid>, <precedence>, <delay>, <reliability>, <peak>, <mean>]
[+CGQMIN: ...]
OK
ERROR
+CME ERROR: <err>

Write Command

AT+CGQMIN=[<cid>[, <precedence>[, <delay>[, <reliability>[, <peak>[, <mean>]]]]]]

Response(s)

OK
ERROR
+CME ERROR: <err>

PIN	ASC0	ASC1	MUX1	MUX2	MUX3	Last
+	+	+	+	+	+	-	-

Reference(s)

GSM 07.07

Command Description

The test command returns values supported as a compound value. If the MT supports several PDP types, the parameter value ranges for each PDP type are returned on a separate line.

The read command returns the current settings for each defined context. If no minimum profile was explicitly specified for a context, simply OK will be returned, but default values will be used for that context.

This command allows the TE to specify a minimum acceptable profile which is checked by the MT against the negotiated profile returned in the Activate PDP Context Accept message.
The set command specifies a profile for the context identified by the (local) context identification parameter, <cid>.
A special form of the set command, AT+CGQMIN= <cid> causes the minimum acceptable profile for context number <cid> to become undefined. In this case no check is made against the negotiated profile.
On ASC0 all QoS profiles will be stored non volatile. On all other instances only the QoS settings for context 1 are stored non volatile.

Parameter Description

<cid>(num)

Parameter specifies a particular PDP context definition. The parameter is local to the TE-MT interface and is used in other PDP context-related commands.

1...2

`<precedence>`(num)

Precedence class

[0]	network subscribed value
1	High Priority Service commitments shall be maintained ahead of precedence classes 2 and 3
2	Normal priority Service commitments shall be maintained ahead of precedence class 3
3	Low priority Service commitments shall be maintained

`<delay>`(num)

Delay class

The delay parameter defines the end-to-end transfer delay incurred in the transmission of SDUs through the GPRS network(s).

[0] network subscribed value

1..4 SDU size: 128 octets:

Delay Class	Mean Transfer Delay	95 percentile
1 (Predictive)	<0.5	<1.5
2 (Predictive)	<5	<25
3 (Predictive)	<50	<250
4 (Best Effort)	Unspecified	

SDU size: 1024 octets:

Delay Class	Mean Transfer Delay	95 percentile
1 (Predictive)	<0.5	<1.5
2 (Predictive)	<5	<25
3 (Predictive)	<50	<250
4 (Best Effort)	Unspecified	

`<reliability>`(num)

Reliability class

[0]	network subscribed value
1	Non real-time traffic, error-sensitive application that cannot cope with data loss
2	Non real-time traffic, error-sensitive application that can cope with infrequent data loss
3	Non real-time traffic, error-sensitive application that can cope with data loss, GMM/SM, and SMS
4	Real-time traffic, error-sensitive application that can cope with data loss
5	Real-time traffic, error non-sensitive application that can cope with data loss

`<peak>`(num)

Peak throughput class (in octets per second).

[0] network subscribed value

1	Up to 1 000 (8 kbit/s).
2	Up to 2 000 (16 kbit/s).
3	Up to 4 000 (32 kbit/s).
4	Up to 8 000 (64 kbit/s).
5	Up to 16 000 (128 kbit/s).
6	Up to 32 000 (256 kbit/s).
7	Up to 64 000 (512 kbit/s).
8	Up to 128 000 (1024 kbit/s).
9	Up to 256 000 (2048 kbit/s).

`<mean>`(num)

Mean throughput class(in octets per hour).

[0]	network subscribed value
1	100 (~0.22 bit/s)
2	200 (~0.44 bit/s)
3	500 (~1.11 bit/s)
4	1 000 (~2.2 bit/s)
5	2 000 (~4.4 bit/s)
6	5 000 (~11.1 bit/s)
7	10 000 (~22 bit/s)
8	20 000 (~44 bit/s)
9	50 000 (~111 bit/s)
10	100 000 (~0.22 kbit/s)
11	200 000(~0.44 kbit/s)
12	500 000(~1.11 kbit/s)
13	1 000 000 (~2.2 kbit/s)
14	2 000 000 (~4.4 kbit/s)
15	5 000 000 (~11.1 kbit/s)
16	10 000 000 (~22 kbit/s)
17	20 000 000 (~44 kbit/s)
18	50 000 000 (~111 kbit/s)
31	best effort

`<PDP_type>`(str)

Packet Data Protocol Type

“IP“

Notes

- If parameters are not defined, the parameter default values depend on the HLR-stored subscribed default values.
- Definitions of parameters in GSM 02.60 and GSM 03.60 paragraph 15.2 "Quality of Service Profile".
- If some of the QoS parameters are omitted, they will keep their current value (or the default value if not specified so far).
- If QOS settings are configured with `AT+CGQMIN` and `AT+CGEQMIN` in parallel the MT will use only the `AT+CGEQMIN` settings for connection setup while the `AT+CGQMIN` settings are ignored.

11.12 AT+CGQREQ Quality of Service Profile (Requested)

Syntax

Test Command

AT+CGQREQ=?

Response(s)

+CGQREQ: <PDP_type>, (list of supported <precedence>s), (list of supported <delay>s), (list of supported <reliability>s), (list of supported <peak>s), (list of supported <mean>s)
OK

Read Command

AT+CGQREQ?

Response(s)

[+CGQREQ: <cid>, <precedence>, <delay>, <reliability>, <peak>, <mean>]
[+CGQREQ: ...]

Write Command

AT+CGQREQ=[<cid>[, <precedence>[, <delay>[, <reliability>[, <peak>[, <mean>]]]]]]

Response(s)

OK
ERROR
+CME ERROR: <err>

PIN	ASC0	ASC1	MUX1	MUX2	MUX3		Last
+	+	+	+	+	+	-	-

Reference(s)

GSM 07.07

Command Description

The test command returns values supported as a compound value. If the MT supports several PDP types, the parameter value ranges for each PDP type are returned on a separate line.

The read command returns the current settings for each defined context. If no requested profile was explicitly specified for a context, simply OK will be returned, but default values will be used for that context.

This command allows the TE to specify a Quality of Service Profile that is used when the MT sends an Activate PDP Context Request message to the network.
The set command specifies a profile for the context identified by the (local) context identification parameter, <cid>.
A special form of the set command, +CGQREQ=<cid> causes the requested profile for context number <cid> to become undefined.
On ASC0 all QoS profiles will be stored non volatile. On all other instances only the QoS settings for context 1 are stored non volatile.

Parameter Description

<cid>(num)

Parameter specifies a particular PDP context definition. The parameter is local to the TE-MT interface and is used in other PDP context-related commands.

1...2

<precedence>(num)

Precedence class

[0]	network subscribed value

1	High Priority Service commitments shall be maintained ahead of precedence classes 2 and 3
2	Normal priority Service commitments shall be maintained ahead of precedence class 3
3	Low priority Service commitments shall be maintained

`<delay>`(num)

Delay class

This parameter defines the end-to-end transfer delay incurred in the transmission of SDUs through the GPRS network(s).

[0] network subscribed value

1..4 with SDU size = 128 octets:

Delay Class	Mean Transfer Delay	95 percentile
1 (Predictive)	<0.5	<1.5
2 (Predictive)	<5	<25
3 (Predictive)	<50	<250
4 (Best Effort)	Unspecified	-

with SDU size = 1024 octets:

Delay Class	Mean Transfer Delay	95 percentile
1 (Predictive)	<0.5	<1.5
2 (Predictive)	<5	<25
3 (Predictive)	<50	<250
4 (Best Effort)	Unspecified	-

`<reliability>`(num)

Reliability class

[0]	network subscribed value
1	Non real-time traffic, error-sensitive application that cannot cope with data loss
2	Non real-time traffic, error-sensitive application that can cope with infrequent data loss
3	Non real-time traffic, error-sensitive application that can cope with data loss, GMM/SM, and SMS
4	Real-time traffic, error-sensitive application that can cope with data loss
5	Real-time traffic, error non-sensitive application that can cope with data loss

`<peak>`(num)

Peak throughput class

in octets per second

[0]	network subscribed value
1	Up to 1 000 (8 kbit/s)
2	Up to 2 000 (16 kbit/s)
3	Up to 4 000 (32 kbit/s)

4	Up to 8 000 (64 kbit/s)
5	Up to 16 000 (128 kbit/s)
6	Up to 32 000 (256 kbit/s)
7	Up to 64 000 (512 kbit/s)
8	Up to 128 000 (1024 kbit/s)
9	Up to 256 000 (2048 kbit/s)

<mean>(num)

Mean throughput class
in octets per hour

[0]	network subscribed value
1	100 (~0.22 bit/s)
2	200 (~0.44 bit/s)
3	500 (~1.11 bit/s)
4	1 000 (~2.2 bit/s)
5	2 000 (~4.4 bit/s)
6	5 000 (~11.1 bit/s)
7	10 000 (~22 bit/s)
8	20 000 (~44 bit/s)
9	50 000 (~111 bit/s)
10	100 000 (~0.22 kbit/s)
11	200 000(~0.44 kbit/s)
12	500 000(~1.11 kbit/s)
13	1 000 000 (~2.2 kbit/s)
14	2 000 000 (~4.4 kbit/s)
15	5 000 000 (~11.1 kbit/s)
16	10 000 000 (~22 kbit/s)
17	20 000 000 (~44 kbit/s)
18	50 000 000 (~111 kbit/s)
31	best effort

<PDP_type>(str)

Packet Data Protocol type
“IP“

Notes

- If parameters are not defined, the parameter default values depend on the HLR-stored subscribed default values.
- Definitions of parameters in GSM 02.60 and GSM 03.60 paragraph 15.2 "Quality of Service Profile".
- If some of the QoS parameters are omitted, they will keep their current value (or the default value if not specified so far).
- If QOS settings are configured with AT+CGQREQ and AT+CGEQREQ in parallel the MT will use only the AT+CGEQREQ settings for connection setup while the AT+CGQREQ settings are ignored.

11.13 AT+CGREG GPRS Network Registration Status

AT+CGREG write command enables presentation of URC "+CGREG: <stat>" when <n>=1 and ME's GPRS network registration status changes.
AT+CGREG read command queries the current URC presentation status and <stat> which shows whether the network has currently indicated the registration of the ME.

Syntax

Test Command

AT+CGREG=?

Response(s)

+CGREG: (list of supported <n>s)
OK

Read Command

AT+CGREG?

Response(s)

+CGREG: <n>, <stat>
OK

Write Command

AT+CGREG=[<n>]

Response(s)

OK
ERROR
+CME ERROR: <err>

PIN	ASC0	ASC1	MUX1	MUX2	MUX3		Last
+	+	+	+	+	+	-	-

Reference(s)

GSM 07.07

Unsolicited Result Code

+CGREG: <stat>

Indicates a change in the ME's GPRS network registration status.

Parameter Description

<n>(num)	
0(&F)(P)	Disable network registration unsolicited result code
1	Enable network registration URC "+CGREG: <stat>"

<stat>(num)	
0	Not registered, ME is not currently searching an operator to register to. The ME is in GMM state GMM-NULL or GMM-DEREGISTERED-INITIATED. GPRS service is disabled, the ME is allowed to attach to GPRS if requested by the user.
1	Registered, home network. The ME is in GMM state GMM-REGISTERED or GMM-ROUTING-AREA-UPDATING-INITIATED INITIATED on the home PLMN

2	Not registered, but ME is currently trying to attach or searching an operator to register to. The ME is in GMM state GMM-DEREGISTERED or GMM-REGISTERED-INITIATED. The GPRS service is enabled, but an allowable PLMN is currently not available. The ME will start a GPRS attach as soon as an allowable PLMN is available.
3	Registration denied. The ME is in GMM state GMM-NULL. The GPRS service is disabled, the ME is not allowed to attach to GPRS if requested by the user.
4	Unknown
5	Registered, roaming. The ME is in GMM state GMM-REGISTERED or GMM-ROUTING-AREA-UPDATING-INITIATED on a visited PLMN.

Note

- When the module is GPRS attached and a PLMN reselection occurs to a non-GPRS network or to a network where the SIM is not subscribed to for using GPRS, the resulting GMM (GPRS mobility management) state according to GSM 24.008 is REGISTERED/NO CELL, meaning that the read command will still show <stat>=1 or <stat>=5.

11.14 AT+CGSMS Select service for MO SMS messages

Syntax

Test Command
AT+CGSMS=?
Response(s)
+CGSMS: (list of supported <service>s) OK

Read Command
AT+CGSMS?
Response(s)
+CGSMS: <service> OK

Write Command
AT+CGSMS=[<service>]
Response(s)
OK ERROR +CME ERROR: <err>

PIN	ASC0	ASC1	MUX1	MUX2	MUX3	Last
+	+	+	+	+	+	-	-

Reference(s)
GSM 07.07

Command Description

The test command is used for requesting information on which services and service preferences can be set by using the AT+CGSMS write command

The read command returns the currently selected service or service preference.

The write command is used to specify the service or service preference that the MT will use to send MO SMS messages. If parameter <service> is not given, the current value remains unchanged.

Parameter Description

<service>(num)

A numeric parameter which indicates the service or service preference to be used. Parameter is global for all interfaces and volatile.

0	GPRS
1	Circuit switched
2	GPRS preferred (use circuit switched SMS transfer if mobile is not GPRS attached)
3(&F)(P)	Circuit switched preferred (use GPRS if circuit switched is not available)

Note

- Sending SMS via GPRS is only possible when mobile is attached using AT+CGATT.

11.15 AT^SGAUTH Set type of authentication for PPP connection

Syntax

Test Command

AT^SGAUTH=?

Response(s)

^SGAUTH: (list of supported <auth>s)
OK
ERROR
+CME ERROR: <err>

Read Command

AT^SGAUTH?

Response(s)

^SGAUTH: <auth>
OK
ERROR
+CME ERROR: <err>

Write Command

AT^SGAUTH=<auth>

Response(s)

OK
ERROR
+CME ERROR: <err>

PIN	ASC0	ASC1	MUX1	MUX2	MUX3	Last
-	+	+	+	+	+	-	-

Parameter Description

<auth>(num)

Indicates types of supported authentication.

0	none
1	PAP
2	CHAP
3(&F)(P)	PAP and CHAP

11.16 AT^SGCONF Configuration of GPRS related Parameters

Syntax

Test Command

AT^SGCONF=?

Response(s)

^SGCONF: (list of supported <llc_pdu_length_U>s), (list of supported <GPRS msclass>es)
OK

Read Command

AT^SGCONF?

Response(s)

^SGCONF: <llc_pdu_length_U>, <GPRS msclass>
OK

Write Command

AT^SGCONF=[<llc_pdu_length_U>][, [<GPRS msclass>]]

Response(s)

OK
ERROR
+CME ERROR: <err>

PIN	ASC0	ASC1	MUX1	MUX2	MUX3		Last
-	+	+	+	+	+	-	-

Parameter Description

<llc_pdu_length_U>(num)

The maximum number of octets in an information field of Unnumbered (U) frames.

0	No negotiation with network (500 will be used).
140...1520(P)	Lower values diminish performance.

<GPRS msclass>(num)

GPRS Multislot Class. The value can be one of the classes indicated with the Test command. The value set is volatile and powerup value is the maximum allowed.

Note

- AT^SGCONF will respond with "+CME ERROR: operation temporary not allowed" if the module is already GPRS attached (see AT+CGATT).

11.17 ATA Manual acceptance of a network request for PDP context activation

The V.250 ATA command may be used to accept a network request for a PDP context activation announced by the unsolicited result codes "RING" or "+CRING: GPRS". BGS2-E responds with CONNECT, enters V.250 online data state and follows the same procedure as it would after having received a AT+CGANS=1 with no <L2P> or <cid> values specified.
If you try to answer a request which is no longer present or which is already answered by another instance, NO CARRIER is returned.

Syntax

Exec Command
ATA
Response(s)
CONNECT NO CARRIER

PIN	ASC0	ASC1	MUX1	MUX2	MUX3		Last
+	+	+	+	+	+	-	+

Reference(s)
3GPP 27.007

11.18 ATD*99# Request GPRS service

This command causes the MT to perform whatever actions are necessary to establish a communication between the TE and the external PDN.
The V.250 'D' (Dial) command causes the MT to enter the V.250 online data state and, with the TE, to start the specified layer 2 protocol. No further commands may follow on the AT command line. GPRS attachment and PDP context activation procedures may take place prior to or during the PDP startup if they have not already been performed using the AT+CGATT and AT+CGACT commands. If the context to be used is already activated, it will be deactivated first. This ensures that the right context parameters will be used (e.g. QoS changes since the last context activation or the called address specified by ATD*99#).
Examples on how to use this command are provided in "Section 11.22, Using GPRS AT commands (Examples)".
To confirm acceptance of the command before entering the V.250 online data state command will respond with CONNECT.
When the layer 2 protocol has terminated, either as a result of an orderly shut down of the PDP or an error, the MT enters V.250 command state and returns NO CARRIER (for details refer to Section 11.5.1, Automatic deactivation of PDP context during dial-up PPP).

Syntax

Exec Command

ATD*99[* [<called_address>][* [<L2P>][* [<cid>]]]]#

Response(s)

CONNECT
NO CARRIER

PIN	ASC0	ASC1	MUX1	MUX2	MUX3		Last
+	+	+	+	+	+	-	+

Reference(s)

GSM 07.07

Parameter Description

<called_address>(str)

IP V4 address in the form w.x.y.z, which identifies the called party; if it is provided, the MT will automatically set up a virtual call to the specified address after the context has been activated. This parameter is currently not used and needs not to be specified.

<L2P>(str)

Layer 2 protocol to be used between the TE and MT.

“PPP“	layer 2 protocol PPP
“1“	layer 2 protocol PPP

<cid>(num)

Parameter specifies a particular PDP context definition (see AT+CGDCONT command). If no context is specified, an internal context with default properties is used (see AT+CGDCONT, AT+CGQREQ and AT+CGQMIN).

1...2

Notes

- If BGS2-E is in dedicated mode, command returns "+CME ERROR: phone busy".
- ATD is used as a standard V.250 AT command, too.
- When using the command on the second serial interface please see also Section 1.9.

11.19 ATD*98# Request GPRS IP service

This command causes the MT to perform whatever actions are necessary to establish a communication between the TE and the external PDN.
The V.250 'D' (Dial) command causes the MT to enter the V.250 online data state and, with the TE, to start the layer 2 protocol.
GPRS attachment and PDP context activation procedures may take place prior to or during the PDP startup if they have not already been performed using the AT+CGATT and AT+CGACT commands. If the context to be used is already activated, it will be deactivated first. This ensures that the right context parameters will be used (e.g. QoS changes since the last context activation).
To confirm acceptance of the command before entering the V.250 online data state command will respond with CONNECT.
When the layer 2 protocol has terminated, either as a result of an orderly shut down of the PDP or an error, the MT enters V.250 command state and returns NO CARRIER (for details refer to Section 11.5.1, Automatic deactivation of PDP context during dial-up PPP).

Syntax

Exec Command

ATD*98[* <cid>]#

Response(s)

CONNECT
NO CARRIER

PIN	ASC0	ASC1	MUX1	MUX2	MUX3		Last
+	+	+	+	+	+	-	+

Reference(s)

GSM 07.07

Parameter Description

<cid>(num)

Parameter specifies a particular PDP context definition (see AT+CGDCONT command). If no context is specified, an internal context with default properties is used (see AT+CGDCONT, AT+CGQREQ and AT+CGQMIN).

1...2

Notes

- If BGS2-E is in dedicated mode, command returns "+CME ERROR: phone busy".
- ATD is used as a standard V.250 AT command, too.
- When using the command on the second serial interface please see also Section 1.9.

11.20 ATH Manual rejection of a network request for PDP context activation

The V.250 ATH command may be used to deactivate all PDP contexts which are active or online on the same interface. This command should not be used to deactivate PDP contexts during the implicit PDP context deactivation procedure which is started automatically after LCP termination or by dropping the DTR line (if AT&D2 is configured). For details refer to Section 11.5.1, Automatic deactivation of PDP context during dial-up PPP.
The ATH command may also be used to reject a network request for PDP context activation announced by the unsolicited result codes "RING" or "+CRING: GPRS".

Syntax

Exec Command
ATH
Response(s)
OK

PIN	ASC0	ASC1	MUX1	MUX2	MUX3		Last
+	+	±	+	±	±	-	-

Reference(s)
3GPP 27.007

Notes

- In contrast to 3GPP 27.007 it is possible to cancel a connection with ATH after a break. This is done for compatibility reasons due to the "dial-up network" drivers of Microsoft Windows.
- ATH is used as a standard V.250 AT command, too (see ATH for details).
- If ATH is used to reject a network request for PDP context activation, then other PDP contexts on the same interface which are active or online will not be deactivated.

11.21 ATS0 Automatic Response to Network Request for PDP Context Activation

The V.250 ATS0=<n> (Automatic answer) command may be used to turn off (n=0) and on (n>0) the automatic response to a network request for a PDP context activation. See also "3GPP TS 27.007 (GSM 07.07): AT command set for User Equipment (UE)".
When the ATS0=<n> (<n> > 0) command is received, BGS2-E will attempt to perform a GPRS attach if not yet attached and if configured to do so (see AT^SCFG, parameter <gs0aa>). Subsequently, the ME will announce a network request for PDP context activation by issuing the URCs "RING" or "+CRING: GPRS" to the TE, followed by the intermediate result code CONNECT. The ME then enters V.250 online data state and follows the same procedure as it would after receiving a AT+CGANS=1 command with no <L2P> or <cid> values specified.
ATS0=0 does not perform an automatic GPRS detach.

Syntax

Read Command
ATS0?
Response(s)
<n> OK

Write Command
ATS0=<n>
Response(s)
OK

PIN	ASC0	ASC1	MUX1	MUX2	MUX3	🔔	Last
±	+	+	+	+	+	-	-

Reference(s)
3GPP 27.007

Parameter Description

<n>(num)(&W)(&V)	
000(&F)	Disable automatic response mode.
001-255	Enable automatic response after specified number of rings.

Notes

- If different settings are used on each interface, and a request for PDP context activation is received, the interface 'wins' which is idle and uses the smallest ATS0 value.
- When a network request for PDP context activation is answered automatically and another AT command is issued at the same time on the same interface then this AT command will not be executed. Any response relates to the automatic context activation procedure. If the AT command which caused the collision was a CS data call, the CONNECT response does not pertain to this data call but to GPRS. This can be detected if ATX is not set to 0. The CS data call will issue CONNECT <text>, GPRS will issue CONNECT only.
- A network request for PDP context activation has a maximum duration of approximately 40 seconds (for details see GSM 04.08). A RING/CRING URC is issued every 5 seconds, so setting parameter <n> to values greater than 7 will not allow a successful context activation and is not recommended.
- Automatic GPRS attach will not be performed on recalling a stored user profile with ATZ or on power-up, even though a value <n> greater than 0 was stored in the user profile with AT&W.
- If AT^SCFG="GPRS/ATS0/withAttach","on" is selected, but the automatic GPRS attach attempt fails (e.g. the network rejects the attach request), the ATS0 write command ends up with "ERROR" or "+CME ERROR: unknown" after approx. 5 minutes, though the new <n> value takes effect. This is necessary because ATS0 is used for circuit switched calls too.

11.22 Using GPRS AT commands (Examples)

Examples

EXAMPLE 1

Defining and using a Context Definition ID (CID):
Every time a CID is used as a parameter for a GPRS command the CID has to be defined before by using the AT+CGDCONT command. To get the parameter of a CID use the AT+CGDCONT read option. If the response of 'AT+CGDCONT?' is OK only, there is no CID defined.

```
AT+CGDCONT?
OK                                                    There is no CID defined
```

All parameters of the CID are initiated by NULL or not present values, and the CID itself is set to be undefined. To define a CID use the AT+CGDCONT command with at least one CID parameter. At the moment the mobile supports CID 1 and CID 2 by using the AT+CGDCONT command.

Define CID 1 and set the PDP type to IP, access point name and IP address are not set:

```
AT+CGDCONT=1,"IP"
OK
```

Define CID 2 and sets PDP type, APN and IP addr:

```
AT+CGDCONT=2,"IP", "internet.t-d1.gprs", 111.222.123.234
OK
```

A following read command will respond:

```
AT+CGDCONT?
+CGDCONT:1,"IP","","",0,0
+CGDCONT:2,"IP","internet.t-d1.gprs",111.222.123.234
OK
```

Set the CID 1 to be undefined:

```
AT+CGDCONT=1
OK
```

A following read command will respond:

```
AT+CGDCONT?
+CGDCONT:2,"IP","internet.t-d1.gprs",111.222.123.234
OK
```

EXAMPLE 2

Quality of Service (QoS) is a special parameter of a CID which consists of several parameters itself.
The QoS consists of
- the precedence class
- the delay class
- the reliability class
- the peak throughput class
- the mean throughput class
and is divided in "requested QoS" and "minimum acceptable QoS".

All parameters of the QoS are initiated by default to the "network subscribed value (= 0)" but the QoS itself is set to be undefined. To define a QoS use the AT+CGQREQ or AT+CGQMIN command.

Overwrite the precedence class of QoS of CID 1 and set the QoS of CID 1 to be present:

```
AT+CGQREQ=1,2
OK
```

A following read command will respond:

```
AT+CGQREQ?
+CGQREQ: 1,2,0,0,0,0
OK
```

All QoS values of CID 1 are set to network subscribed now, except precedence class which is set to 2. Now set the QoS of CID 1 to not present:

```
AT+CGQREQ=1
OK
```

Once defined, the CID it can be activated. To activate CID 2 use:

```
AT+CGACT=1,2
OK
```

If the CID is already active, the mobile responds OK at once.
If no CID and no STATE is given, all defined CIDs will be activated by:

```
AT+CGACT=
OK
```

If no CID is defined the mobile responds +CME ERROR: invalid index
Remark: If the mobile is NOT attached by AT+CGATT=1 before activating, the attach is automatically done by the AT+CGACT command.

After defining and activating a CID it may be used to get online by:

`AT+CGDATA="PPP",1` `CONNECT`	The mobile is connected using the parameters of CID 1.
`AT+CGDATA=` `CONNECT`	The mobile is connected using default parameters (<L2P>="PPP" and <cid> as described for command AT+CGDATA).

The mobile supports Layer 2 Protocol (L2P) PPP only.
Remark: If the mobile is NOT attached by AT+CGATT=1 and the CID is NOT activated before connecting, attaching and activating is automatically done by the AT+CGDATA command.

11.23 Using the GPRS dial command ATD

Example

In addition to the GPRS AT commands you can use the "D" command to dial into to the GPRS network.

There are two GPRS Service Codes for the ATD command: Values 98 and 99.
Examples:

`ATD*99#` `CONNECT`	Establish a connection by service code 99.
`ATD*99*123.124.125.126*PPP*1#` `CONNECT`	Establish a connection by service code 99, IP address 123 and L2P = PPP and using CID 1. The CID has to be defined by `AT+CGDCONT`.
`ATD*99**PPP#` `CONNECT`	Establish a connection by service code 99 and L2P = PPP.
`ATD*99***1#` `CONNECT`	Establish a connection by service code 99 and using CID 1.
`ATD*99**PPP*1#` `CONNECT`	Establish a connection by service code 99 and L2P = PPP and using CID 1. The CID has to be defined by `AT+CGDCONT`.
`ATD*98#` `CONNECT`	Establish a connection by service code 98.
`ATD*98*1#` `CONNECT`	Establish an IP connection by service code 98 using CID 1. The CID has to be defined by `AT+CGDCONT`.

12. FAX Commands

This chapter describes the AT commands used for fax communications.
If the ME is acting as a fax modem for a PC based fax application it is necessary to select the proper Service Class (Fax Class) provided by the ME. The ME reports its Service Class capabilities, i.e. the current setting and the range of services available. This is provided by the AT+FCLASS command.

Service Classes supported by the ME:

AT+FCLASS Parameter	Service class	Reference, Standard
0	Data modem	e.g. TIA/EIA-602 or ITU V.250
1	Service Class 1	EIA/TIA-578-A
2	Manufacturer specific	This document and EIA PN-2388 (draft)

The following AT commands are dummy commands:
AT+FAA Auto Answer mode
AT+FECM Error Correction Mode control
AT+FLNFC Page Length format conversion
AT+FLPL Indicate document available for polling
AT+FMINSP Minimum Phase C speed
AT+FRBC Phase C data receive byte count
AT+FREL Phase C received EOL alignment
AT+FSPL Enable polling
AT+FTBC Phase C data transmit byte count
AT+FWDFC Page width format conversion
Invoking these commands will not cause ERROR result codes, but these commands have no functionality.

12.1 FAX parameters

Below you can find a summary of parameters used by the fax-specific AT commands and responses described in this chapter. Please note that parameter <mod> is dedicated to Fax Class 1 only. All other parameters listed below are for Fax Class 2 only.

Parameter Description

<mod>(num)

Modulation scheme

To find out which value is actually supported by <mod> use the test commands while the ME is off-hook.

3	V21 Ch2 - 300 bps
24	V.27ter - 2400 bps
48	V.27ter - 4800 bps
72	V.29 - 7200 bps
96	V.29 - 9600 bps

<bf>(num)

Binary File Transfer Mode

[0]	Disable BFT
1	Enable BFT

 (num)	
Bit Rate	
0	2400 bps, V.27ter
1	4800 bps, V.27ter
2	7200 bps, V.29
[3]	9600 bps, V.29

<df>(num)	
Data Compression Format	
[0]	1-D modified Huffman
1	2-D modified read
2	2-D uncompressed mode

<ec>(num)	
Error Correction Mode	
[0]	Disable ECM
1	Enable ECM, 64 bytes/frame
2	Enable ECM, 256 bytes/frame

<ln>(num)	
Page Length	
0	A4, 297mm
1	B4, 364mm
[2]	Unlimited length

<st>(num)	
Scan Time/Line	
[0]	0 ms (at VR= normal)
1	5 ms
2	10 ms
3	10 ms
4	20 ms
5	20 ms
6	40 ms
7	40 ms

<vr>(num)	
Vertical Resolution	
0	Normal, 98 lpi
[1]	Fine, 196 lpi

<wd>(num)	
Page Width	
[0]	1728 pixels in 215mm
1	2048 pixels in 255 mm
2	2432 pixels in 303 mm
3	1216 pixels in 151 mm
4	864 pixels in 107 mm

Note

- The host application is not required to support all values of the parameters listed above. Depending on the application design it may be sufficient to implement only the default values. See T.31, T.32 and EIA PN-2388 specifications for further advice.

12.1.1 Summary of Fax Class 2 URCs defined by EIA PN-2388

The following URCs are messages indicated in communication only. The URCs are not user definable.

Table 12.1: Summary of Fax Class 2 URCs defined by EIA PN-2388

URC	Meaning
+FCON	Indicates connection with a fax machine.
+FCSI: <id>	Reports the remote ID, called station ID.
+FDCS: <vr>, , <wd>, <ln>, <df>, <ec>, <bf>, <st>	Reports current session parameters (refer to EIA PN-2388, Table 3.10).
+FDIS: <vr>, , <wd>, <ln>, <df>, <ec>, <bf>, <st>	Reports the remote station capabilities (refer to EIA PN-2388, Table 3.10).
+FET: <stat>	Post page message. Indicates whether or not further pages or documents are pending.
+FHNG: <stat>	Reports that call has been terminated and indicates status.
+FNSF: "<param>"	Reports non-standard setup frame.
+FPTS: "<stat>"	Reports the status of received pages.
+FTSI: "<id>"	Reports the remote ID, transmit station ID.

12.2 AT+FBADLIN Bad Line Threshold

This command defines the Copy-Quality-OK-threshold. If <badlin> consecutive lines have pixel count errors in normal resolution (98 dpi) mode, then the copy quality is unacceptable. If <badlin> * 2 consecutive lines have pixel count errors in fine resolution (196 dpi) mode, then the copy quality is unacceptable. "Copy Quality Not OK" occurs if either the error percentage is too high or too many consecutive lines contain errors. A value of 0 implies that error checking is not present or disabled.

Syntax

Read Command

```
AT+FBADLIN?
```

Response(s)

```
<badlin>
OK
```

Write Command

```
AT+FBADLIN=<badlin>
```

Response(s)

```
OK
```

If error is related to ME functionality

```
ERROR
```

PIN	ASC0	ASC1	MUX1	MUX2	MUX3		Last
-	+	-	+	-	-	-	-

Reference(s)

EIA PN-2388

Parameter Description

<badlin>(num)

Bad lines

0...10(P)...255

Note

- Used for Fax Class 2 only.

12.3 AT+FBADMUL Error Threshold Multiplier

This command defines the "Copy-Quality-OK" multiplier. The number of lines received with a bad pixel count is multiplied by this number. If the result exceeds the total number of lines on the page the error rate is considered too high. A threshold multiplier value of 20 corresponds to a 5 per cent error rate. A value of 0 implies that error checking is not present or disabled.

Syntax

Read Command

```
AT+FBADMUL?
```

Response(s)

```
<badmul>
OK
```

Write Command

```
AT+FBADMUL=<badmul>
```

Response(s)

```
OK
```

If error is related to ME functionality:

```
ERROR
```

PIN	ASC0	ASC1	MUX1	MUX2	MUX3		Last
-	+	-	+	-	-	-	-

Reference(s)

EIA PN-2388

Parameter Description

`<badmul>`(num)

0...20(P)...255

Note

- Used for Fax Class 2 only.

12.4 AT+FBOR Query data Bit Order

This command queries the bit order for the receive mode. The mode is set by the ME depending on the selected Service Class, see "AT+FCLASS Fax: Select, read or test service class".

Syntax

Test Command

AT+FBOR=?

Response(s)

(list of supported <bor>s)
OK

Read Command

AT+FBOR?

Response(s)

<bor>
OK

Write Command

AT+FBOR=<bor>

Response(s)

OK

PIN	ASC0	ASC1	MUX1	MUX2	MUX3		Last
-	+	-	+	-	-	-	-

Reference(s)

EIA PN-2388

Parameter Description

<bor>(num)

bit order modes

0	Direct bit order for both Phase C and for Phase B/D data.
[1]	Reversed bit order for Phase C data, direct Bit Order for Phase B/D data.

Note

- Used for Fax Class 2 only.

12.5 AT+FCIG Query or set the Local Polling ID

Syntax

Test Command
AT+FCIG=?
Response(s)
(max. length of Local Polling ID string) (range of supported ASCII character values) OK

Read Command
AT+FCIG?
Response(s)
<id> OK

Write Command
AT+FCIG=<id>
Response(s)
OK

PIN	ASC0	ASC1	MUX1	MUX2	MUX3	🔔	Last
-	+	-	+	-	-	-	-

Reference(s)
EIA PN-2388

Parameter Description

<id>(num)

Local Polling ID string, max. length and possible content as reported by test command. Default value is empty string ("").

Notes

- Used for Fax Class 2 only.
- See also AT+FLID Query or set the Local ID setting capabilities.

12.6 AT+FCLASS Fax: Select, read or test service class

AT+FCLASS sets the ME to a particular mode of operation (data, fax). This allows the ME to process information in a manner suitable for that type of information.

Syntax

Test Command

```
AT+FCLASS=?
```

Response(s)

(list of supported <n>s)

```
OK
```

Read Command

```
AT+FCLASS?
```

Response(s)

```
<n>
OK
```

Write Command

```
AT+FCLASS=<n>
```

Response(s)

```
OK
```

PIN	ASC0	ASC1	MUX1	MUX2	MUX3		Last
-	+	-	+	-	-	-	-

Reference(s)

EIA/TIA-592-A

Parameter Description

<n>(num)(&W)(&V)	
0(&F)	Data (e.g. EIA/TIA-602 or ITU V.250)
1	Fax class 1 (EIA/TIA-578-A, Service Class 1)
2	Fax class 2 (EIA/TIA SP-2388, an early draft version of EIA/TIA-592-A - Service class 2.1)

Notes

- Using Error Correcting Mode (ECM) when sending FAXes over GSM should be avoided.
- If <n> is set to 1 or 2, all incoming calls will be answered as fax calls when ATA is issued on multiplexer channel 1 resp. ASC0. For calls explicitly signaled as voice or data calls, this procedure will fail with result code "NO CARRIER", but the incoming call will continue to ring.
  It is possible to change the setting of <n> to 0 while the call is ringing, and accept the call afterwards with ATA.

12.7 AT+FCQ Copy Quality Checking

This command controls Copy Quality checking when receiving a fax.

Syntax

Test Command

`AT+FCQ=?`

Response(s)

(list of supported copy quality checking `<cq>`s)
`OK`

Read Command

`AT+FCQ?`

Response(s)

`<cq>`
`OK`

Write Command

`AT+FCQ=<cq>`

Response(s)

`OK`

PIN	ASC0	ASC1	MUX1	MUX2	MUX3		Last
-	+	-	+	-	-	-	-

Reference(s)

EIA PN-2388

Parameter Description

`<cq>`(num)	
0	No copy quality checking. The ME will generate Copy Quality OK (MCF) responses to complete pages.
[1]	ME can check 1-D phase data. The connected application must check copy quality for 2-D phase C data.

Note

- Used for Fax Class 2 only.

12.8 AT+FCR Capability to Receive

Syntax

Write Command
AT+FCR=<cr>
Response(s)
OK

PIN	ASC0	ASC1	MUX1	MUX2	MUX3		Last
-	+	-	+	-	-	-	-

Reference(s)

EIA PN-2388

Parameter Description

<cr>(num)	
[0]	ME will not receive message data. This value can be used when the application has insufficient storage. The ME can send and can be polled for a file.
1	ME can receive message data.

Note

- Used for Fax Class 2 only.

12.9 AT+FDCC Query or set capabilities

This command allows the connected application to sense and constrain the capabilities of the facsimile DCE (=ME), from the choices defined in CCITT T.30 Table 2.

Syntax

Test Command

```
AT+FDCC=?
```

Response(s)

(list of <vr>s), (list of
s), (list of <wd>s), (list of <ln>s), (list of <df>s), (list of <ec>s), (list of <bf>s), (list of <st>s)

```
OK
```

Read Command

```
AT+FDCC?
```

Response(s)

<vr>, <br>, <wd>, <ln>, <df>, <ec>, <bf>, <st>

```
OK
```

Write Command

```
AT+FDCC=<vr>, <br>, <wd>, <ln>, <df>, <ec>, <bf>, <st>
```

Response(s)

```
OK
```

PIN	ASC0	ASC1	MUX1	MUX2	MUX3		Last
-	+	-	+	-	-	-	-

Reference(s)

EIA PN-2388

Notes

- For further information see AT+FDIS.
- Used for Fax Class 2 only.

12.10 AT+FDFFC Data Compression Format Conversion

This command determines the ME response to a mismatch between the data format negotiated for the fax session, reported by the <df> subparameter, and the Phase C data desired by the controlling application, indicated by the optional AT+FDT <df> subparameter, or the AT+FDIS <df> subparameter for AT+FDR operation.

Syntax

Test Command

AT+FDFFC=?

Response(s)

(list of <df>s)
OK

Read Command

AT+FDFFC?

Response(s)

<df>
OK

Write Command

AT+FDFFC=<df>

Response(s)

OK

PIN	ASC0	ASC1	MUX1	MUX2	MUX3		Last
-	+	-	+	-	-	-	-

Reference(s)

EIA PN-2388

Parameter Description

<df>(num)

[0]	Mismatch checking is always disabled. The controlling application has to check the <df> subparameter and transfer matching data.

Notes

- For further information see AT+FDIS.
- Used for Fax Class 2 only.

12.11 AT+FDIS Query or set session parameters

This command allows the controlling application to sense and constrain the capabilities used for the current session. It uses AT+FDIS to generate DIS or DTC messages directly, and uses AT+FDIS and received DIS messages to generate DCS messages.

Syntax

Test Command

AT+FDIS=?

Response(s)

(list of <vr>s), (list of
s), (list of <wd>s), (list of <ln>s), (list of <df>s), (list of <ec>s), (list of <bf>s), (list of <st>s)
OK

Read Command

AT+FDIS?

Response(s)

<vr>, <br>, <wd>, <ln>, <df>, <ec>, <bf>, <st>
OK

Write Command

AT+FDIS=<vr>, <br>, <wd>, <ln>, <df>, <ec>, <bf>, <st>

Response(s)

OK

PIN	ASC0	ASC1	MUX1	MUX2	MUX3		Last
-	+	-	+	-	-	-	-

Reference(s)

EIA PN-2388

Note

- Used for Fax Class 2 only.

12.12 AT+FDR Begin or continue phase C Data Reception

The command initiates transition to Phase C data reception.

Syntax

Exec Command

```
AT+FDR
```

Response(s)

```
CONNECT
or
OK
If error related to ME functionality
ERROR
```

PIN	ASC0	ASC1	MUX1	MUX2	MUX3	🔔	Last
-	+	-	+	-	-	-	-

Reference(s)

EIA PN-2388

Note

- Used for Fax Class 2 only.

12.13 AT+FDT Data Transmission

This command requests the ME to transmit a Phase C page. When the ME is ready to accept Phase C data, it issues the negotiation responses and the CONNECT result code to the application.
In Phase B, the AT+FDT command releases the ME to proceed with negotiation, and releases the DCS message to the remote station. In Phase C, the AT+FDT command resumes transmission after the end of a data stream transmitted before.

Syntax

Exec Command
AT+FDT
Response(s)
CONNECT

Write Command
AT+FDT=<df>, <vr>, <wd>, <ln>
Response(s)
CONNECT

PIN	ASC0	ASC1	MUX1	MUX2	MUX3	🔔	Last
-	+	-	+	-	-	-	-

Reference(s)
EIA PN-2388

Note

- Used for Fax Class 2 only.

12.14 AT+FET End a page or document

This command indicates that the current page or partial page is complete. An ERROR response code results if this command is issued while the mode is on-hook.

Syntax

Write Command
AT+FET=<ppm>
Response(s)
OK

PIN	ASC0	ASC1	MUX1	MUX2	MUX3		Last
-	+	-	+	-	-	-	-

Reference(s)
EIA PN-2388

Parameter Description

<ppm>(num)

Post Page Message Codes	
1	Another document next
2	No more pages or documents
4	Another page, procedure interrupt
5	Another document, procedure interrupt

Note

- Used for Fax Class 2 only.

12.15 AT+FK Kill operation, orderly FAX abort

This command causes the TA to terminate the session in an orderly manner.

Syntax

Exec Command
`AT+FK`
Response(s)
`OK`

PIN	ASC0	ASC1	MUX1	MUX2	MUX3	🔔	Last
-	+	-	+	-	-	-	-

Note

- Used for Fax Class 2 only

12.16 AT+FLID Query or set the Local Id setting capabilities

Syntax

Test Command

AT+FLID=?

Response(s)

(max. character length of Local ID string) (range of supported ASCII character values)
OK

Read Command

AT+FLID?

Response(s)

<lid>
OK

Write Command

AT+FLID=<lid>

Response(s)

OK

PIN	ASC0	ASC1	MUX1	MUX2	MUX3	🔔	Last
-	+	-	+	-	-	-	-

Reference(s)

EIA PN-2388

Parameter Description

<lid>(num)

Local ID string
Max. length and possible content as reported by test command. Default value is empty string ("").

Notes

- Used for Fax Class 2 only.
- See also AT+FCIG.

12.17 AT+FMDL Identify Product Model

This command sends the model identification to the TA.

Syntax

Read Command
`AT+FMDL?`
Response(s)
`Gipsy Soft Protocolstack` `OK`

PIN	ASC0	ASC1	MUX1	MUX2	MUX3		Last
-	+	-	+	-	-	-	-

Note

- Used for Fax Class 2 only.

12.18 AT+FMFR Request Manufacturer Identification

This command sends the manufacturer identification to the TA.

Syntax

Read Command
`AT+FMFR?`
Response(s)
`OK`

PIN	ASC0	ASC1	MUX1	MUX2	MUX3	🔔	Last
-	+	-	+	-	-	-	-

Note

- Used for Fax Class 2 only

12.19 AT+FOPT Set bit Order independently

Model specific command to set bit order independently of the understanding which is "mirrored" and which is direct.

Syntax

Write Command
AT+FOPT=<opt>
Response(s)
OK

PIN	ASC0	ASC1	MUX1	MUX2	MUX3		Last
-	+	-	+	-	-	-	-

Parameter Description

<opt>(num)	
0	Non-standard
1	Standard

Note

- Used for Fax Class 2 only.

12.20 AT+FPHCTO DTE Phase C Response Timeout

The timeout value <tout> determines how long the DCE will wait for a command after reaching the end of data when transmitting in Phase C. When timeout is reached, the DCE assumes that there are no more pages or documents to send.

Syntax

Read Command

AT+FPHCTO?

Response(s)

<tout>
OK

Write Command

AT+FPHCTO=<tout>

Response(s)

OK
If error is related to ME functionality
ERROR

PIN	ASC0	ASC1	MUX1	MUX2	MUX3	🔔	Last
-	+	-	+	-	-	-	-

Reference(s)

EIA PN-2388

Parameter Description

<tout>(num)

Timeout

Value in 100ms units

0...30(P)...255

Note

- Used for Fax Class 2 only.

12.21 AT+FREV Identify Product Revision

This comand sends the revision identification to the TA.

Syntax

Read Command
`AT+FREV?`
Response(s)
`V2.550` `OK`

PIN	ASC0	ASC1	MUX1	MUX2	MUX3		Last
-	+	-	+	-	-	-	-

Note

- Used for Fax Class 2 only.

12.22 AT+FRH Receive Data Using HDLC Framing

The AT+FRH command enables the TA to receive frames using the HDLC protocol and the modulation schemes defined in Section 12.1, FAX parameters. An ERROR response code results if the command is issued while the modem is on-hook. The test command can be used in off-hook mode to check the modulation schemes supported by BGS2-E.

Syntax

Test Command

AT+FRH=?

Response(s)

In off-hook mode only:
+FRH: (list of <mod>s)
OK
In on-hook mode:
ERROR

Write Command

AT+FRH=<mod>

Response(s)

CONNECT
If error is related to ME functionality
ERROR

PIN	ASC0	ASC1	MUX1	MUX2	MUX3		Last
-	+	-	+	-	-	-	-

Reference(s)

TIA/EIA-578

Note

- Used for Fax Class 1 only.

12.23 AT+FRM Receive Data

The AT+FRM command causes the TA to enter the receive mode, using one of the modulation schemes defined in Section 12.1, FAX parameters.

An ERROR response code results if the write command is issued while the modem is on-hook. The test command can be used in on-hook or off-hook mode to check the modulation schemes supported by BGS2-E.

Syntax

Test Command

AT+FRM=?

Response(s)

(list of <mod>s)
OK

Write Command

AT+FRM=<mod>

Response(s)

CONNECT
If error is related to ME functionality:
ERROR

PIN	ASC0	ASC1	MUX1	MUX2	MUX3		Last
-	+	-	+	-	-	-	-

Reference(s)

TIA/EIA-578

Notes

- Used for Fax Class 1 only.
- <mod>= 3 is not possible.

12.24 AT+FRS Receive Silence

<time>=n causes the TA to report an OK result code to the TE after the specified period of silence was detected on the line.
The command is aborted if any character is received by the TE. The modem discards the aborting character and issues an OK result code. An ERROR response code results if this command is issued while the mode is on-hook.

Syntax

Write Command

AT+FRS=<time>

Response(s)

OK
If error is related to ME functionality:
ERROR

PIN	ASC0	ASC1	MUX1	MUX2	MUX3	🔔	Last
-	+	-	+	-	-	-	-

Reference(s)

TIA/EIA-578

Parameter Description

<time>(num)

Number of 10 millisecond intervals

0...255

Note

- Used for Fax Class 1 only

12.25 AT+FTH Transmit Data Using HDLC Framing

The AT+FTH command causes the TA to transmit data using the HDLC protocol and the modulation schemes defined in Section 12.1, FAX parameters. An ERROR response code results if the command is issued while the modem is on-hook. The test command can be used in off-hook mode to check the modulation schemes supported by BGS2-E.

Syntax

Test Command

AT+FTH=?

Response(s)

In off-hook mode only:
+FTH:(list of <mod>s)
OK
In on-hook mode:
ERROR

Write Command

AT+FTH=<mod>

Response(s)

CONNECT

PIN	ASC0	ASC1	MUX1	MUX2	MUX3		Last
-	+	-	+	-	-	-	-

Reference(s)

TIA/EIA-578

Note

- Used for Fax Class 1 only

12.26 AT+FTM Transmit Data

The AT+FTM command causes the TA to transmit data, using one of the modulation schemes defined in Section 12.1, FAX parameters.

An ERROR response code results if the write command is issued while the modem is on-hook. The test command can be used in on-hook or off-hook mode to check the modulation schemes supported by BGS2-E.

Syntax

Test Command

AT+FTM=?

Response(s)

(list of <mod>s)
OK

Write Command

AT+FTM=<mod>

Response(s)

CONNECT
If error is related to ME functionality:
ERROR

PIN	ASC0	ASC1	MUX1	MUX2	MUX3		Last
-	+	-	+	-	-	-	-

Reference(s)

TIA/EIA-578

Notes

- Used for Fax Class 1 only.
- <mod>= 3 is not possible

12.27 AT+FTS Stop Transmission and Wait

This command causes the TA to terminate a transmission and wait for <time> 10 millisecond intervals before sending the OK result code to the TE.

Syntax

Write Command

AT+FTS=<time>

Response(s)

OK

In on-hook mode:

ERROR

PIN	ASC0	ASC1	MUX1	MUX2	MUX3		Last
-	+	-	+	-	-	-	-

Reference(s)

TIA/EIA-578

Parameter Description

<time>(num)

no. of 10 millisecond intervals

0...85

Note

- Used for Fax Class 1 only

12.28 AT+FVRFC Vertical Resolution Format Conversion

This command determines the DCE response to a mismatch between the vertical resolution negotiated for the facsimile session and the Phase C data desired by the DTE.

Syntax

Test Command

`AT+FVRFC=?`

Response(s)

(list of supported `<vrfc>`s)
`OK`

Read Command

`AT+FVRFC?`

Response(s)

`<vrfc>`
`OK`

Write Command

`AT+FVRFC=<vrfc>`

Response(s)

`OK`

PIN	ASC0	ASC1	MUX1	MUX2	MUX3		Last
-	+	-	+	-	-	-	-

Reference(s)

EIA PN-2388

Parameter Description

`<vrfc>`(num)	
0	Disable mismatch checking.
[2]	Enable mismatch checking, with resolution conversion of 1-D data in the DCE, and an implied `AT+FK` command executed on 2-D mismatch detection.

Note

- Used for Fax Class 2 only.

13. Short Message Service (SMS) Commands

The AT Commands described in this chapter allow an external application to use the Short Message Service with the BGS2-E.

13.1 SMS Parameters

Parameter Description

<ackpdu>(num)

Format is same for <pdu> in case of SMS, but without GSM 24.11 SC address field and parameter shall be bounded by double quote characters like a normal string type parameter

<alpha>(str)(+CSCS)

String type alphanumeric representation of <da> or <oa> corresponding to the entry found in phonebook; this feature is not supported

<cdata>(num)

Command Data

GSM 03.40 TP-Command-Data in text mode responses; ME converts each 8-bit octet into two IRA character long hexadecimal numbers, e.g. octet with integer value 42 is represented as two characters "2A", IRA 50 and 65 (decimal).

<ct>(num)

Command Type

GSM 03.40 TP-Command-Type in integer format

[0]...255

<da>(num)(+CSCS)

Destination Address

GSM 03.40 TP- Destination-Address Address-Value field in string format; BCD numbers (or GSM default alphabet characters) are converted into characters; type of address given by <toda>

<data>(num)(+CSCS)

User Data

In case of SMS: GSM 03.40 TP-User-Data in text mode responses; format:

- If <dcs> indicates that GSM 03.38 default alphabet is used and <fo> indicates that GSM 03.40 TP-User-Data-Header-Indication is not set: ME converts GSM alphabet into current TE character set according to rules covered in Annex A.
- If <dcs> indicates that 8-bit or UCS2 data coding scheme is used, or <fo> indicates that GSM 03.40 TP-User-Data-Header-Indication is set: ME converts each 8-bit octet into hexadecimal numbers con-taining two IRA characters, e.g. octet with integer value 42 is represented as two characters "2A", IRA 50 and 65 (decimal).

In case of CBS: GSM 03.41 CBM Content of Message in text mode responses; format:

- If <dcs> indicates that GSM 03.38 default alphabet is used: ME converts GSM alphabet into current TE character set according to rules covered in Annex A.
- If <dcs> indicates that 8-bit or UCS2 data coding scheme is used: ME converts each 8-bit octet into hexadecimal numbers containing two IRA characters.

<dt>(num)

Discharge Time

GSM 03.40 TP-Discharge-Time in time-string format: "yy/MM/dd,hh:mm:ss+zz", where characters indicate year (two last digits), month, day, hour, minutes, seconds and time zone. For example, 6th of May 1994, 22:10:00 GMT+2 hours equals "94/05/06,22:10:00+08"

<index>(num)

Integer type; value in the range of location numbers supported by the associated memory

<length>(num)

Message Length

Integer type value indicating in the text mode (AT+CMGF=1) the length of the message body <data> (or <cdata>) in characters; or in PDU mode (AT+CMGF=0), the length of the actual TP data unit in octets (i.e. the RP layer SMSC address octets are not counted in the length) In text mode, the maximum length of an SMS depends on the used coding scheme: It is 160 characters if the 7 bit GSM coding scheme is used, and 140 characters according to the 8 bit GSM coding scheme.
If the SMS message format is "text mode" (AT+CMGF=1) and the character set is set to "UCS2" with AT+CSCS and the SMS is also coded as "UCS2" (see <dcs> of AT+CSMP), then the length is in octets instead of characters.

<mem1>(str)

Memory to be used when listing, reading and deleting messages:

“SM“	SIM message storage
“ME“	Mobile Equipment message storage
“MT“(D)	Sum of "SM" and "ME" storages

<mem2>(str)

Memory to be used when writing and sending messages:

“SM“	SIM message storage
“ME“	Mobile Equipment message storage
“MT“(D)	Sum of "SM" and "ME" storages

<mem3>(str)

Received messages will be placed in this memory storage if routing to TE is not set. See command AT+CNMI with parameter <mt>=2.

“SM“	SIM message storage
“MT“(D)	Sum of "SM" and "ME" storages

<mid>(num)

Message Identifier

GSM 03.41 CBM Message Identifier in integer format

<mn>(num)

Message Number

GSM 03.40 TP-Message-Number in integer format

<mr>(num)

Message Reference

GSM 03.40 TP-Message-Reference in integer format

<oa>(num)(+CSCS)

Originating Address

GSM 03.40 TP-Originating-Address Address-Value field in string format; BCD numbers (or GSM default alphabet characters) are converted into characters; type of address given by <tooa>

<page>(num)

Page Parameter

GSM 03.41 CBM Page Parameter bits 4-7 in integer format

<pages>(num)

Page Parameter

GSM 03.41 CBM Page Parameter bits 0-3 in integer format

<pdu>(num)

In the case of SMS: GSM 04.11 SC address followed by GSM 03.40 TPDU in hexadecimal format: ME converts each octet of TP data unit into hexadecimal numbers containing two IRA characters, e.g. octet with integer value 42 is represented as two characters "2A", IRA 50 and 65 (decimal). In the case of CBS: <ra> GSM 03.40 TP-Recipient-Address Ad-dress-Value field in string format; BCD numbers (or GSM default alphabet characters) are converted into characters; type of address given by <tora>

<ra>(num)(+CSCS)

Recipient Address

GSM 03.40 TP-Recipient-Address Address-Value field in string format; BCD numbers (or GSM default alphabet characters) are converted to characters of the currently selected TE character set (refer to command AT+CSCS.); type of address given by <tora>

<sca>(num)(+CSCS)

Service Center Address

GSM 04.11 RP SC address Address-Value field in string format; BCD numbers (or GSM default alphabet characters) are converted to characters of the currently selected TE character set (AT+CSCS); type of address given by <tosca>

<scts>(num)

Service Centre Time Stamp

GSM 03.40 TP-Service-Centre-Time-Stamp in time-string format (refer <dt>)

<sn>(num)

Serial Number

GSM 03.41 CBM Serial Number in integer format

`<st>`(num)

Status

GSM 03.40 TP-Status in integer format

0...255

`<stat>`(str)

Message status

3GPP 27.005 Interface of SMS and CB. Indicates the status of message in memory.

Description	text mode (`<mode>`=1)	PDU mode (`<mode>`=0)	Default
Received unread messages	"REC UNREAD"	0	for SMS reading commands
Received read messages	"REC READ"	1	
Stored unsent messages	"STO UNSENT"	2	for SMS writing commands
Stored sent messages	"STO SENT"	3	
All messages	"ALL"	4	

`<toda>`(num)

Type of Destination Address

GSM 04.11 TP-Destination-Address Type-of-Address octet in integer format (when first character of `<da>` is + (IRA 43) default is 145, otherwise default is 129)

0...255

`<tooa>`(num)

Type of Originating Address

GSM 04.11 TP-Originating-Address Type-of-Address octet in integer format (default refer `<toda>`)

`<tora>`(num)

Type of Recipient Address

GSM 04.11 TP-Recipient-Address Type-of-Address octet in integer format (default refer `<toda>`)

`<tosca>`(num)

Type of Service Center Address

GSM 04.11 RP SC address Type-of-Address octet in integer format (default refer `<toda>`)

13.2 AT+CMGC Send SMS Command

Syntax

Test Command

AT+CMGC=?

Response(s)

OK

Write Command

If text mode (see AT+CMGF=1)

AT+CMGC=<fo>, <ct>[, <pid>[, <mn>[, <da>[, <toda>]]]]<CR> Text can be entered <CTRL-Z>/<ESC>

Response(s)

+CMGC: <mr>[, <scts>]

If sending fails

ERROR

+CMS ERROR: <err>

Write Command

If PDU mode (see AT+CMGF=0)

AT+CMGC=<length><CR> PDU can be entered <CTRL-Z>/<ESC>

Response(s)

+CMGC: <mr>[, <ackpdu>]

OK

If sending fails

ERROR

+CMS ERROR: <err>

PIN	ASC0	ASC1	MUX1	MUX2	MUX3	Last
+	+	+	+	+	+	-	-

Reference(s)

GSM 07.05

Notes

- After invoking the commands AT+CMGW, AT+CMGS or AT+CMGC it is necessary to wait for the prompt ">" before entering text or PDU. After the prompt a timer will be started to guard input period.
- In general but especially at baudrates below 19200 it is recommended to only use the command line termination character (ATS3) before starting text or PDU input. Use of line termination character followed by an additional response formatting character (ATS4) may cause the problem that the latter will become part of the input data.

13.3 AT+CMGD Delete short message

The write command deletes a short message from the preferred message storage <mem1> location <index>.

Syntax

Test Command
AT+CMGD=?
Response(s)
OK

Write Command
AT+CMGD=<index>
Response(s)
OK ERROR +CMS ERROR: <err>

PIN	ASC0	ASC1	MUX1	MUX2	MUX3		Last
+	+	+	+	+	+	-	-

Reference(s)
GSM 07.05

Notes

- If there is no short message stored at the selected index, the response is OK too.
- Users should be aware that when using this AT command quickly after SIM PIN authentication the SIM data may not yet be accessible, resulting in a short delay before the requested AT command response is returned. See Section 21.1, Restricted access to SIM data after SIM PIN authentication for further detail.

13.4 AT+CMGF Select SMS message format

The AT+CMGF command specifies the input and output format of the short messages.

Syntax

Test Command

AT+CMGF=?

Response(s)

+CMGF: (list of supported<mode>s)
OK

Read Command

AT+CMGF?

Response(s)

+CMGF: <mode>
OK
ERROR
+CMS ERROR: <err>

Write Command

AT+CMGF=<mode>

Response(s)

OK
ERROR
+CMS ERROR: <err>

PIN	ASC0	ASC1	MUX1	MUX2	MUX3	Last
-	+	+	+	+	+	-	-

Reference(s)

GSM 07.05

Parameter Description

<mode>(num)(&W)(&V)

[0](&F)	PDU mode
1	Text mode

13.5 AT+CMGL List SMS messages from preferred store

The write command returns messages with status value <stat> from message storage <mem1> to the TE. If the status of the message is 'received unread', the status in the storage changes to 'received read'.
The execute command is the same as the write command with the given default for <stat>.

Syntax

Test Command

AT+CMGL=?

Response(s)

+CMGL: (list of supported <stat>s)
OK

Exec Command

AT+CMGL

Response(s)

+CMGL: (see write command for default of <stat>)
OK

Write Command

AT+CMGL=<stat>

Response(s)

Output if text mode (AT+CMGF=1) and command successful:
For SMS- SUBMITs and/or SMS-DELIVERs
+CMGL: <index>, <stat>, <oa>/<da>, [<alpha>], [<scts>][, <tooa>/<toda>, <length>]
<data>
[...]
OK

For SMS-STATUS-REPORTs
+CMGL: <index>, <stat>, <fo>, <mr>, [<ra>], [<tora>], <scts>, <dt>, <st>
[...]
OK

For SMS-Commands
+CMGL: <index>, <stat>, <fo>, <ct>
[...]
OK

Output if PDU mode AT+CMGF=0 and command successful:
For SMS-SUBMITs and/or SMS-DELIVERs
+CMGL: <index>, <stat>, [<alpha>], <length>
<pdu>
[...]
OK

If error is related to ME functionality
ERROR
+CMS ERROR: <err>

PIN	ASC0	ASC1	MUX1	MUX2	MUX3		Last
+	+	+	+	+	+	-	-

Reference(s)

GSM 07.05

Notes

- The selected <mem1> can contain different types of SMs (e.g. SMS-DELIVERs, SMS-SUBMITs, SMS-STATUS-REPORTs and SMS-COMMANDs), the response may be a mix of the responses of different SM types. TE application can recognize the response format by examining the third response parameter.
- The parameters <ra> and <tora> will only be displayed if parameter <mode> of the AT^SSCONF command is set to 1.
- Users should be aware that when using this AT command quickly after SIM PIN authentication the SIM data may not yet be accessible, resulting in a short delay before the requested AT command response is returned. See Section 21.1, Restricted access to SIM data after SIM PIN authentication for further detail.

13.6 AT+CMGR Read SMS messages

The write command returns SMS message with location value <index> from message storage <mem1> to the TE. If status of the message is 'received unread', status in the storage changes to 'received read'.

When using Text mode it is recommended to set AT+CSDH=1. In this case the AT+CMGR write command responses will include detailed header information. See AT+CSDH for details. The parameters <ra> and <tora> will only be displayed if parameter <mode> of the AT^SSCONF command is set to 1.

Syntax

Test Command

AT+CMGR=?

Response(s)

OK

Write Command

AT+CMGR=<index>

Response(s)

Output if text mode (AT+CMGF=1) and command successful:
For SMS-DELIVER

+CMGR: <stat>, <oa>, [<alpha>], <scts>[, <tooa>, <fo>, <pid>, <dcs>, <sca>, <tosca>, <length>]
<data>
[...]
OK

For SMS-SUBMIT

+CMGR: <stat>, <da>, [<alpha>][, <toda>, <fo>, <pid>, <dcs>, [<vp>], <sca>, <tosca>, <length>]
<data>
[...]
OK

For SMS-STATUS-REPORT

+CMGR: <stat>, <fo>, <mr>, [<ra>], [<tora>], <scts>, <dt>, <st>
<data>
[...]
OK

For SMS-Commands

+CMGR: <stat>, <fo>, <ct>[, <pid>, [<mn>], [<da>], [<toda>], <length>]
<data>
[...]
OK

Output if PDU mode (AT+CMGF=0) and command successful:
For SMS-SUBMITs and/or SMS-DELIVERs

+CMGR: <stat>, [<alpha>], <length>
<pdu>
[...]
OK
ERROR
+CMS ERROR: <err>

PIN	ASC0	ASC1	MUX1	MUX2	MUX3		Last
+	+	+	+	+	+	-	-

Reference(s)

GSM 07.05

Notes

- Response if AT+CMGR is used to read an empty record index: +CMGR: 0,,0
- Response if AT+CMGR is used to read a non-existent record index: +CMS ERROR: invalid memory index
- Users should be aware that when using this AT command quickly after SIM PIN authentication the SIM data may not yet be accessible, resulting in a short delay before the requested AT command response is returned. See Section 21.1, Restricted access to SIM data after SIM PIN authentication for further detail.

13.7 AT+CMGS Send SMS

AT+CMGS write command transmits a short message to network (SMS-SUBMIT).
After invoking the write command wait for the prompt ">" and then start to write the message. To send the message simply enter <CTRL-Z>. After the prompt a timer will be started to guard the input period.
To abort sending use <ESC>. Abortion is acknowledged with "OK", though the message will not be sent.
The message reference <mr> is returned by the ME on successful message delivery. The value can be used to identify the message in a delivery status report provided as an unsolicited result code.

Syntax

Test Command

AT+CMGS=?

Response(s)

OK

Write Command

If text mode (see AT+CMGF=1)

AT+CMGS=<da>[, <toda>]<CR> Text can be entered. <CTRL-Z>/<ESC>

Response(s)

+CMGS: <mr>[, <scts>]
OK
If sending fails see notes below.

Write Command

If PDU mode (see AT+CMGF=0)

AT+CMGS=<length><CR> PDU can be entered. <CTRL-Z>/<ESC>

Response(s)

+CMGS: <mr>[, <ackpdu>]
OK
If sending fails see notes below.

PIN	ASC0	ASC1	MUX1	MUX2	MUX3	🔔	Last
+	+	+	+	+	+	-	-

Reference(s)

GSM 07.05

Notes

- If sending fails, for example, if a message is too long, the result code depends on the current setting of the AT^SM20 command:
  If the AT^SM20 <CmgwMode> equals 1 (factory default) any failure to send a message is responded with "OK". Users should be aware, that despite the "OK" response, the message will not be sent to the subscriber.
  If the AT^SM20 <CmgwMode> equals 0 any failure to send a message is responded with "ERROR".
- If sending fails due to timeout, then
  AT^SM20 <CmgwMode>=1 causes "+CMS ERROR: unknown error" to be returned;
  AT^SM20 <CmgwMode>=0 causes "+CMS ERROR: timer expired" to be returned.
- Note that some providers do not recognize an @ symbol used in a short message. A widely used alternative is typing "*" as defined in GSM 03.40 (GPP TS 23.40).
- All characters entered behind the prompt ">" will be recognized as GSM characters. For example, "Backspace" (ASCII character 8) does not delete a character, but will be inserted into the short message as an additional physical character. As a result, the character you wanted to delete still appears in the text, plus the GSM code equivalent of the Backspace key.

- Message Length in Text Mode
  The maximum length of a short message depends on the used coding scheme: It is 160 characters if the 7 bit GSM coding scheme is used, and 140 characters according to the 8 bit GSM coding scheme.
  In case UCS2 character set selected it is highly recommended to set Data Coding Scheme (<dcs> of AT+CSMP) to 16-bit data, otherwise the length of sms user data is restricted to 88 octets. Even better for messages with UCS2 character set is the PDU Mode.
- In general but especially at baudrates below 19200 it is recommended to only use the command line termination character (ATS3) before starting text or PDU input. Use of line termination character followed by an additional response formatting character (ATS4) may cause the problem that the latter will become part of the input data.
- During a pending USSD user interaction the AT+CMGS write command returns "+CME ERROR: operation temporary not allowed" to prevent blocking situations.

13.8 AT+CMGW Write Short Messages to Memory

AT+CMGW execute and write commands transmit a short message (either SMS-DELIVER or SMS-SUBMIT) from TE to memory storage <mem2>. Memory location <index> of the stored message is returned. Message status will be set to 'stored unsent' unless otherwise given in parameter <stat>.

After invoking the execute or write command wait for the prompt ">" and then start to write the message. To save the message simply enter <CTRL-Z>. After the prompt a timer will be started to observe the input. To abort writing use <ESC>. Abortion is acknowledged with "OK", though the message will not be saved.

Message Length in Text Mode: The maximum length of a short message depends on the used coding scheme configured with <dcs> of AT+CSMP:
7 bit GSM coding scheme: 160 characters
8 bit GSM coding scheme: 140 characters
16 bit GSM coding scheme: 70 characters.
The length of 8-bit data coded short messages has to be greater than 0.
For more information on data coding schemes and character sets refer to GSM 03.38 and Section 1.6.1, GSM alphabet tables and UCS2 character values.

Syntax

Test Command

AT+CMGW=?

Response(s)

OK

Exec Command

If text mode (see AT+CMGF=1):

AT+CMGW

Response(s)

<CR> Text can be entered. <CTRL-Z>/<ESC>
+CMGW: <index>
OK
If writing fails
ERROR
+CMS ERROR: <err>

Write Command

If text mode (see AT+CMGF=1):

AT+CMGW=<oa>/<da>[, [<tooa>/<toda>][, <stat>]]<CR> Text can be entered. <CTRL-Z>/<ESC>

Response(s)

+CMGW: <index>
OK
If writing fails see notes below.

Write Command

If PDU mode (see AT+CMGF=0):

AT+CMGW=<length>[, <stat>]<CR> PDU can be entered. <CTRL-Z>/<ESC>

Response(s)

+CMGW: <index>
OK
If writing fails see notes below.

PIN	ASC0	ASC1	MUX1	MUX2	MUX3	🔔	Last
+	+	+	+	+	+	-	-

Reference(s)

GSM 07.05, 03.38

Notes

- If writing fails, for example, if a message is too long, the result code depends on the current setting of the AT^SM20 command:
  If the AT^SM20 <CmgwMode>=1 (factory default) any failure to send a message is responded with "OK". Users should be aware, that despite the "OK" response, the message will not be written to the selected SMS storage.
  If the AT^SM20 <CmgwMode> equals 0 any failure to write a message is responded with "ERROR".
- If writing fails due to timeout, then
  AT^SM20 <CmgwMode>=1 causes "+CMS ERROR: unknown error" to be returned;
  AT^SM20 <CmgwMode>=0 causes "+CMS ERROR: timer expired" to be returned.
- Note that some providers do not recognize an @ symbol used in a short message. A widely used alternative is typing "*" as defined in GSM 03.40 (GPP TS 23.40).
- In general but especially at baudrates below 19200 it is recommended to only use the command line termination character (ATS3) before starting text or PDU input. Use of line termination character followed by an additional response formatting character (ATS4) may cause the problem that the latter will become part of the input data.
- SMS-COMMANDs and SMS-STATUS-REPORTs cannot be stored in text mode.
- All characters entered behind the ">" prompt will be recognized as GSM characters. For example, "Backspace" (ASCII character 8) does not delete a character, but will be inserted into the short message as an additional physical character. As a result, the character you wanted to delete still appears in the text, plus the GSM code equivalent of the Backspace key.

13.9 AT+CMSS Send short messages from storage

The write command sends message with location value <index> from message storage <mem2> to the network (SMS-SUBMIT or SMS-COMMAND). If new recipient address <da> is given for SMS-SUBMIT, it shall be used instead of the one stored with the message. Reference value <mr> is returned to the TE on successful message delivery. Value can be used to identify message upon unsolicited delivery status report result code.
If the optional parameter <da> is given, the old status of the short message at <index> remains unchanged (see <stat>).

Syntax

Test Command

AT+CMSS=?

Response(s)

OK

Write Command

If text mode (AT+CMGF=1):

AT+CMSS=<index>[, <da>[, <toda>]]

Response(s)

+CMSS: <mr>[, <scts>]
OK
If sending fails
ERROR
+CMS ERROR: <err>

Write Command

If PDU mode (AT+CMGF=0):

AT+CMSS=<index>[, <da>[, <toda>]]

Response(s)

+CMSS: <mr>[, <ackpdu>]
OK
If sending fails
ERROR
+CMS ERROR: <err>

PIN	ASC0	ASC1	MUX1	MUX2	MUX3		Last
+	+	+	+	+	+	-	-

Reference(s)

GSM 07.05

13.10 AT+CNMA New Message Acknowledgement to ME/TE

Write and execute command confirm successful receipt of a new message (SMS-DELIVER or SMS-STATUS-REPORT) routed directly to the TE.
BGS2-E will not send another "+CMT" or "+CDS" URC to the TE until previous one is acknowledged with this command. If the ME does not receive acknowledgement within required time (network timeout), it sends an "RP-ERROR" message to the network. The ME will automatically disable routing to the TE by setting both <mt> and <ds> values of AT+CNMI to zero.

Syntax

Test Command

```
AT+CNMA=?
```

Response(s)

```
+CNMA: (list of supported <n>s)
OK
```

Exec Command

```
AT+CNMA
```

Response(s)

```
OK
ERROR
+CMS ERROR: <err>
```

Write Command

```
AT+CNMA=<n>
```

Response(s)

```
OK
ERROR
+CMS ERROR: <err>
```

PIN	ASC0	ASC1	MUX1	MUX2	MUX3		Last
+	+	+	+	+	+	-	-

Reference(s)

GSM 07.05

Parameter Description

<n>(num)

Parameter required only for PDU mode.

0	Command operates similarly as in text mode.

Notes

- Execute and write command shall only be used if AT+CSMS parameter <service> equals 1 (= phase 2+).
- Execute command can be used no matter whether text mode or PDU mode is activated. Write command is designed for the PDU mode only.
- If multiplex mode is activated (AT+CMUX=0) the AT+CNMI parameter will be set to zero on all channels, if one channel fails to acknowledge an incoming message within the required time.

13.11 AT+CNMI SMS Event Reporting Configuration

AT+CNMI controls details of the SMS related URC presentation. It selects the procedure how the receipt of a new SMS from the network is indicated to the TE when TE is active, e.g. DTR signal is ON.
If the TE is inactive (e.g. DTR signal is OFF), message receiving should be done as specified in GSM 03.38. If the DTR signal is not available or the state of the signal is ignored (V.250 command AT&D0, reliable message transfer can be assured by using AT+CNMA acknowledgment procedure.
The rules <mt>=2 and <mt>=3 for storing received messages are possible only if phase 2+ compatibility is activated with AT+CSMS=1. The parameter <ds>=1 is only available in phase 2+.

Syntax

Test Command

AT+CNMI=?

Response(s)

+CNMI: (list of supported<mode>s), (list of supported <mt>s), (list of supported <bm>s), (list of supported <ds>s), (list of supported <bfr>s)
OK

Read Command

AT+CNMI?

Response(s)

+CNMI: <mode>, <mt>, <bm>, <ds>, <bfr>
OK

Write Command

AT+CNMI=<mode>[, <mt>[, <bm>[, <ds>[, <bfr>]]]]

Response(s)

OK
ERROR
+CMS ERROR: <err>

PIN	ASC0	ASC1	MUX1	MUX2	MUX3	Last
+	+	+	+	+	+	-	-

Reference(s)

GSM 07.05

Unsolicited Result Codes

URC 1

<mt>=1:

+CMTI: <mem3>, <index>

Indicates that new message has been received

URC 2

<mt>=2 (PDU mode enabled):

+CMT: <length><CR><LF><pdu>

Indicates that new message has been received

URC 3

<mt>=2 (text mode enabled):

+CMT: <oa>, <scts>[, <tooa>, <fo>, <pid>, <dcs>, <sca>, <tosca>, <length>]<CR><LF><data>

Indicates that new message has been received

URC 4

<bm>=2 (PDU mode enabled):

+CBM: <length><CR><LF><pdu>

Indicates that new cell broadcast message has been received

URC 5

<bm>=2 (text mode enabled):

+CBM: <sn>, <mid>, <dcs>, <page>, <pages><CR><LF><data>

Indicates that new cell broadcast message has been received

URC 6

<ds>=1 (PDU mode enabled):

+CDS: <length><CR><LF><pdu>

Indicates that new SMS status report has been received

URC 7

<ds>=1 (text mode enabled):

+CDS: <fo>, <mr>[, <ra>][, <tora>], <scts>, <dt>, <st>

Indicates that new SMS status report has been received

URC 8

<ds>=2:

+CDSI: <mem3>, <index>

Indicates that new SMS status report has been received

Parameter Description

<mode>(num)(&W)(&V)	
[0](&F)	SMS related URCs are always buffered in the ME. If the buffer is full, the oldest indications are discarded and replaced with newly received indications.
1	SMS related URCs are forwarded directly to the TE. However, if this is not possible because ME-TE link is reserved, e.g. during a data call, these URCs are discarded.
2	SMS related URCs are forwarded directly to the TE. However, if this is not possible because ME-TE link is reserved these URCs are buffered and flushed to the TE afterwards.
3	SMS related URCs are forwarded directly to the TE. However, if this is not possible because ME-TE link is reserved these URCs are buffered and flushed to the TE afterwards. Additionally, while ME-TE link is reserved, buffered URCs are signaled to the TE via sending a BREAK or activating the RING line, according to AT^SCFG parameters <uri>, <udri> and <urat>.

<mt>(num)(&W)(&V)	
Rules for storing received short messages depend on the relevant data coding method (refer to GSM 03.38), preferred memory storage (AT+CPMS) setting and this value. Note: If AT command interface is acting as the only display device, the ME must support storage of class 0 messages and messages in the message waiting indication group (discard message)	
[0](&F)	No SMS-DELIVER indications are routed to the TE.
1	If SMS-DELIVER is stored in the ME, indication of the memory location is routed to the TE via URC.

2	SMS-DELIVERs, except class 2 messages and messages in the message waiting indication group (store message) are routed directly to the TE via URC.
3	Class 3 SMS-DELIVERs are routed directly to the TE using URCs defined in <mt>=2. Messages of other data coding schemes result in indication as defined in <mt>=1.

<bm>(num)(&W)(&V)

Rules for storing received CBMs depend on the relevant data coding method (refer to GSM 03.38), the setting of Select CBM Types (AT+CSCB) and this value:

[0](&F)	No CBM indications are routed to the TE.
2	New CBMs are routed directly to the TE via URC.
3	Class 3 CBMs are routed directly to TE using URCs defined in <bm>=2.

<ds>(num)(&W)(&V)

[0](&F)	No SMS-STATUS-REPORTs are routed to the TE.
1	SMS-STATUS-REPORTs are routed to the TE via URC.
2	If SMS-STATUS-REPORT is routed into ME, indication of the memory location is routed to the TE via URC.

<bfr>(num)(&V)

[1](&F)	ME's buffer of SMS related URCs is cleared when <mode> changes from 0 to 1, 2 or 3.

<index>(num)

Integer type; value in the range of location numbers supported by the associated memory

Notes

- Parameters <mt>=2,3 and <ds>=1 are only available with GSM phase 2+ (see AT+CSMS=1). Incoming SMs or Status Reports have to be acknowledged with AT+CNMA=0 when using these phase 2+ parameters.
- Requirements specific to Multiplex mode:
  In multiplex mode (AT+CMUX=0) only one channel can use a phase 2+ parameter. The parameter for <mt> and <ds> on the other channels have to be set to zero. If either a SM or a Status Report is not acknowledged, all AT+CNMI parameter in all channels will be set to zero.
- If the ME operates on different instances (MUX channels 1, 2, 3 or ASC0/ASC1) avoid different settings for routing and indicating short messages. For example, if messages shall be routed directly to one instance of the TE (set with AT+CNMI, AT^SSDA), it is not possible to activate the presentation of URCs with AT+CMER or AT+CNMI on another instance. Any attempt to activate settings that conflict with existing settings on another interface, will result in "+CME ERROR", or accordingly "+CMS ERROR".
- Handling of Class 0 short messages:
  If the host application is provided with a display and AT^SSDA=1 has been set Class 0 short messages can be displayed immediately.
  If the host application does not include a display, ME handles Class 0 short messages as though there was no message class, i.e. it will ignore bits 0 and 1 in the <dcs> and normal rules for exceeded memory capacity shall apply. This approach is compliant with GSM 03.38 .
- The parameters <ra> and <tora> will only be displayed if <mode> of the AT^SSCONF command is set to 1.
- If either a SM or a Status Report is not acknowledged, all AT+CNMI parameter in all channels will be set to zero.

13.12 AT+CPMS Preferred SMS message storage

The write command selects memory storages <mem1>,<mem2>, <mem3> to be used for reading, writing, etc.

Syntax

Test Command

AT+CPMS=?

Response(s)

+CPMS: (list of supported <mem1>s), (list of supported <mem2>s), (list of supported <mem3>s)
OK

Read Command

AT+CPMS?

Response(s)

+CPMS: <mem1>, <used1>, <total1>, <mem2>, <used2>, <total2>, <mem3>, <used3>, <total3>
OK
ERROR
+CMS ERROR: <err>

Write Command

AT+CPMS=<mem1>[, <mem2>[, <mem3>]]

Response(s)

+CPMS: <used1>, <total1>, <used2>, <total2>, <used3>, <total3>
OK
ERROR
+CMS ERROR: <err>

PIN	ASC0	ASC1	MUX1	MUX2	MUX3	Last	
+	+	+	+	+	+	-	-

Reference(s)

GSM 07.05

Parameter Description

<used1>(num)

Number of messages currently in <mem1>

<used2>(num)

Number of messages currently in <mem2>

<used3>(num)

Number of messages currently in <mem3>

<total1>(num)

Number of messages storable in <mem1>

<total2>(num)

Number of messages storable in <mem2>

<total3>(num)

Number of messages storable in <mem3>

Notes

- The Mobile Equipment storage "ME" offers space for 25 short messages, see <mem1>.
- "MT" is the sum of "ME" (= 25 locations) and "SM" (capacity varies with SIM card). The indices <index> of the "MT" storage are dependent on the order selected with AT^SSMSS
- The <mem1>, <mem2> and <mem3> parameter will be stored in non-volatile memory.
- The user should be aware that the setting "MT" involves "ME" and "SM", with "ME" being filled up first. If the "ME" storage is full, BGS2-E will proceed with the "SM" storage.
  Incoming Class 1 short messages (ME specific) will be preferably stored to "ME" and may be transferred to the "SM" storage if "ME" is used up.
  Incoming Class 2 messages (SIM specific) will be stored to the SIM card only, no matter whether or not there is free "ME" space. As a result, the ^SMGO: 2 indication (see AT^SMGO) may be presented without prior indication of ^SMGO: 1. For more information regarding SIM and ME specific message classes refer to <dcs> and the following specifications: GSM 03.38 and 3GPP TS23038.
- When <mem3> is switched over from "MT" to "SM" all free "ME" locations will be filled with dummy short messages. This procedure can take up to 35 seconds, until all the 25 records are written.
  If switching from "MT" to "SM" was not finished due to error or user break, the value of <mem3> remains "MT", but some of the dummy records remain in the "ME" storage. These records have to be deleted manually. When <mem3> equals "SM", do not delete the dummy messages in the "ME". storage. They will be automatically deleted when you switch back from "SM" to "MT". Again, this may take up to 35 seconds.
  If switching from "SM" to "MT" was not finished due to an error or user break, the value of <mem3> remains "SM", but the "ME" storage will no longer be filled with dummy records. New incoming short messages may now be written to the "ME" storage, if "SM" is already full. To avoid this, repeat the AT+CPMS command as soon as possible to switch <mem3> back to "MT". As an alternative, you can manually delete the dummy records and issue AT+CPMS=MT,MT,MT.
- Multiplexer: In Multiplex mode or when the two physical serial interfaces are connected, the parameter <mem3> will be the same on all instances, but the settings of <mem1> and <mem2> may vary on each channel / interface. As a result, changes on parameter <mem1> and/or <mem2> befor activating the multiplexer or differences values for other instanes can result in not desired behaviours like different outputs for AT+CMGL and so on.
- While <mem3> equals "SM" and <mem1> equals "ME" it is possible that, after deleting short messages from "ME", the freed space on "ME" is reclaimed for new incoming short messages, when there is no space left on the "SM" storage. As it is often the clients concern to have received short messages stored only to the SIM card, inconsistent settings should be generally avoided. This can be achieved simply by using the same parameter for all memory indices.
- Users should be aware that when using this AT command quickly after SIM PIN authentication the SIM data may not yet be accessible, resulting in a short delay before the requested AT command response is returned. See Section 21.1, Restricted access to SIM data after SIM PIN authentication for further detail.
- The indices <index> of the storage are dependent on the order selected with AT^SSMSS.

13.13 AT+CSCA SMS Service Center Address

Write command updates the SMSC address, through which mobile originated SMs are transmitted. In text mode, setting is used by send and write commands. In PDU mode, setting is used by the same commands, but only when the length of the SMSC address coded into the <pdu> parameter equals zero.

Syntax

Test Command

```
AT+CSCA=?
```

Response(s)

```
OK
```

Read Command

```
AT+CSCA?
```

Response(s)

```
+CSCA: <sca>, <tosca>
OK
```

Write Command

```
AT+CSCA=<sca>[, <tosca>]
```

Response(s)

```
OK
```

PIN	ASC0	ASC1	MUX1	MUX2	MUX3		Last
+	+	+	+	+	+	-	-

Reference(s)

GSM 07.05

Notes

- In case of using no parameter after AT+CSCA= the content of <sca> will be deleted.
- This command writes the service center address to non-volatile memo.
- The SMS service center address should be entered as specified by the service provider.

13.14 AT+CSCB Select Cell Broadcast Message Indication

The test command returns the supported modes as a compound value.
The write command selects which types of CBMs are to be received by the ME.

Syntax

Test Command

`AT+CSCB=?`

Response(s)

`+CSCB:` (list of supported `<mode>`s)
`OK`

Read Command

`AT+CSCB?`

Response(s)

`+CSCB: <mode>, <mids>, <dcss>`
`OK`

Write Command

`AT+CSCB=<mode>[, <mids>[, <dcss>]]`

Response(s)

`OK`

PIN	ASC0	ASC1	MUX1	MUX2	MUX3		Last
+	+	+	+	+	+	-	-

Reference(s)

GSM 07.05

Parameter Description

`<mode>`(num)

Message mode

0(&F)	Accept messages that are defined in `<mids>` and `<dcss>`
1	Forbid messages that are defined in `<mids>` and `<dcss>`

`<mids>`(str)

Cell Broadcast Message ID specification

[“”](&F)	default value of this parameter is empty string, and it means that no CBM identifiers are specified.

- For `<mode>`=0: Six different possible combinations of CBM IDs (e.g. "0,1,5,320-478,922,2000-3000").
  In certain configurations, e.g. if using SIMs that contain data in Elementary File EF-CBMID (Cell Broadcast Message Identifier for Data download) less than six combinations may be available.
  To access a SIM's Elementary File data refer to command `AT+CRSM`.
- For `<mode>`=1: One CBM ID or range of IDs (e.g. "320-478").

`<dcss>`(str)

CBM data coding scheme specification

[“”](&F)	default value of this parameter is empty string

All different possible combinations of CBM data coding schemes (e.g. "0-3,5"). Using default empty string leads to get all CBMs independent of their dcss.
A given `<dcss>` replaces any former value and is used for consecutive requests.

13.15 AT+CSDH Show SMS text mode parameters

The write command sets whether or not detailed header information is shown in text mode result codes.

Syntax

Test Command
AT+CSDH=?
Response(s)
+CSDH: (list of supported <show>s) OK
Read Command
AT+CSDH?
Response(s)
+CSDH:<show> OK
Write Command
AT+CSDH=<show>
Response(s)
OK

PIN	ASC0	ASC1	MUX1	MUX2	MUX3	Last	
+	+	+	+	+	+	-	-

Reference(s)

GSM 07.05

Parameter Description

<show>(num)(&W)	
[0](&F)	Do not show header values defined in commands AT+CSCA and AT+CSMP (<sca>, <tosca>,<fo>,<vp>, <pid> and <dcs>) nor <length>, <toda> or <tooa> in "+CMTI", AT+CMGL, AT+CMGR result codes for SMS-DELIVERs and SMS-SUBMITs in text mode; for SMS-COMMANDs in +CMGR result code, do not show <pid>,<mn>,<da>, <toda>, <length> or <cdata>
1	Show the values in result codes

13.16 AT+CSMP Set SMS text Mode Parameters

The write command selects values for additional parameters needed when the short message is sent to the network or placed in a storage when text format message mode is selected.
It is possible to set the validity period starting from the time when the short message is received by the SMSC (<vp> is in range 0... 255) or define the absolute time of the validity period termination (<vp> is a string). The format of <vp> is given by <fo>. If TA supports the enhanced validity period format, see GSM 03.40), it shall be given as a hexadecimal coded string (e.g. <pdu>) with quotes.

Syntax

Test Command

```
AT+CSMP=?
```

Response(s)

```
OK
```

Read Command

```
AT+CSMP?
```

Response(s)

```
+CSMP:<fo>, <vp>/ <scts>, <pid>, <dcs>
OK
```

Write Command

```
AT+CSMP=<fo>[, <vp>/<scts>[, <pid>[, <dcs>]]]
```

Response(s)

```
OK
ERROR
+CMS ERROR: <err>
```

PIN	ASC0	ASC1	MUX1	MUX2	MUX3		Last
+	+	+	+	+	+	-	-

Reference(s)

GSM 07.05

Parameter Description

<fo>(num)

First Octet

depending on the command or result code: first octet of GSM 03.40 SMS-DELIVER, SMS-SUBMIT (default 17), SMS-STATUS-REPORT, or SMS-COMMAND (default 2) in integer format

0...17(&F)...255

<vp>(num)

Depending on SMS-SUBMIT <fo> setting: GSM 03.40 TP-Validity-Period either in integer format or in time-string format (refer <dt>)

0...167(&F)...255

<dcs>(num)

Data Coding Scheme

GSM 03.38 SMS Data Coding Scheme, or Cell Broadcast Data Coding Scheme in integer format

0(&F)...247

<pid>(num)

Protocol Identifier

GSM 03.40 TP-Protocol-Identifier in integer format

0(&F)...255

Notes

- When storing a SMS DELIVER from the TE to the preferred memory storage in text mode (using the AT+CMGW write command), <vp> field can be used for <scts>.
- The command writes the parameters to the non-volatile memory.

13.17 AT+CSMS Select Message Service

Syntax

Test Command
AT+CSMS=?
Response(s)
+CSMS: (list of supported<service>s) OK

Read Command
AT+CSMS?
Response(s)
+CSMS: <service>, <mt>, <mo>, <bm> OK

Write Command
AT+CSMS=<service>
Response(s)
+CSMS: <mt>, <mo>, <bm> OK ERROR +CMS ERROR: <err>

PIN	ASC0	ASC1	MUX1	MUX2	MUX3	Last	
+	+	+	+	+	+	-	-

Reference(s)
GSM 07.05

Parameter Description

<service>(num)(&W)(&V)	
0(&F)	GSM 03.40 and GSM 03.41 (the syntax of SMS AT commands is compatible with GSM 07.05 Phase 2 version 4.7.0; Phase 2+ features which do not require new command syntax may be supported, e.g. correct routing of messages with new Phase 2+ data coding schemes)
1	GSM 03.40 and GSM 03.41 (the syntax of SMS AT commands is compatible with GSM 07.05 Phase 2+ version; the requirement of <service> setting 1 is mentioned under corresponding command descriptions).

<mt>(num)(&V)	
Mobile Terminated Messages:	
0	Type not supported
1	Type supported

<mo>(num)(&V)	
Mobile Originated Messages:	
0	Type not supported
1	Type supported

<bm>(num)(&V)	
Broadcast Type Messages:	
0	Type not supported
1	Type supported

Notes

- If CSMS mode is switched from Phase 2+ to Phase 2 and one or more AT+CNMI Parameter are Phase 2+ specific a "+CMS ERROR: unknown error" will appear. It is recommended to switch the AT+CNMI Parameters to Phase 2 specific values before entering Phase 2.
- Phase 2+ (<service>=1) must be set before the following features can be used:
  - Configuring procedures for indicating received short messages with the AT+CNMI parameters <mt>=2 or <mt>=3 and <ds>=1.
  - Acknowledging incoming short messages with AT+CNMA.
  - Receiving Status Reports and acknowledging them with AT+CNMA.

13.18 AT^SLMS List SMS Memory Storage

AT^SLMS indicates the max. capacity of each SMS storage type and the number of locations currently used.

Syntax

Test Command

```
AT^SLMS=?
```

Response(s)

```
OK
```

Exec Command

```
AT^SLMS
```

Response(s)

```
^SLMS: "MT",<total3>, <used3>
^SLMS: "SM",<total1>, <used1>
^SLMS: "ME",<total2>, <used2>
OK
ERROR
+CMS ERROR: <err>
```

PIN	ASC0	ASC1	MUX1	MUX2	MUX3		Last
+	+	+	+	+	+	-	-

Parameter Description

<total1>(num)

Maximum number of messages storable in the SMS memory of the SIM (physical storage "SM")

<total2>(num)

Maximum number of messages storable in the SMS memory of the Mobile Equipment (physical storage "ME")

<total3>(num)

Sum of "SM" and "ME", indicated as "MT". Maximum number of all messages storable in the SIM memory and the Mobile Equipment memory.

<used1>(num)

Number of messages currently stored in the SMS memory of the SIM (physical storage "SM")

<used2>(num)

Number of messages currently stored in the SMS memory of the Mobile Equipment (physical storage "ME")

<used3>(num)

Concatenated logical SMS storages of SIM ("SM") and Mobile Equipment ("ME"). Sum of all messages currently stored, indicated as "MT".

Note

- Users should be aware that when using this AT command quickly after SIM PIN authentication the SIM data may not yet be accessible, resulting in a short delay before the requested AT command response is returned. See Section 21.1, Restricted access to SIM data after SIM PIN authentication for further detail.

13.19 AT^SMGL List Short Messages from preferred store without setting status to REC READ

The write command allows to select a status type and lists, from the message storage <mem1>, all messages that currently have the specified <stat>. The major difference over the standard command AT+CMGL is that the status of the listed messages remains u n c h a n g e d (unread remains unread).
The execute command is the same as the write command, but uses the given default of <stat>.

Syntax

Test Command

AT^SMGL=?

Response(s)

same as AT+CMGL

Exec Command

AT^SMGL

Response(s)

^SMGL: (For default values of <stat>, see "Section 13.1, SMS Parameters.)
OK

Write Command

AT^SMGL=<stat>

Response(s)

same as AT+CMGL

PIN	ASC0	ASC1	MUX1	MUX2	MUX3		Last
+	+	+	+	+	+	-	-

Notes

- The selected <mem1> can contain different types of SMs (e.g. SMS-DELIVERs, SMS-SUBMITs, SMS-STATUS-REPORTs and SMS-COMMANDs), the response may be a mix of the responses of different SM types. TE application can recognize the response format by examining the third response parameter.
- Users should be aware that when using this AT command quickly after SIM PIN authentication the SIM data may not yet be accessible, resulting in a short delay before the requested AT command response is returned. See Section 21.1, Restricted access to SIM data after SIM PIN authentication for further detail.

13.20 AT^SMGO Set or query SMS overflow presentation mode or query SMS overflow

The write command sets the overflow presentation mode.
The read command returns the overflow presentation mode and the SMS overflow status.

Syntax

Test Command

AT^SMGO=?

Response(s)

^SMGO: (list of supported<n>s)
OK

Read Command

AT^SMGO?

Response(s)

^SMGO: <n>, <mode>
OK
ERROR
+CMS ERROR: <err>

Write Command

AT^SMGO=<n>

Response(s)

OK
ERROR
+CMS ERROR: <err>

PIN	ASC0	ASC1	MUX1	MUX2	MUX3	🔔	Last
+	+	+	+	+	+	-	-

Unsolicited Result Code

SMS buffer change:

^SMGO: <mode>

Status of SMS buffer has changed.

Parameter Description

<n>(num)(&W)(&V)

SMS overflow presentation mode

[0](&F)	Disable
1	Enable

<mode>(num)(&V)

SMS overflow status

0	Space available
1	SMS buffer full (The buffer for received short messages is <mem3>. See AT+CPMS.)
2	Buffer full and new message waiting in SC for delivery to phone

Notes

- Incoming short messages with message class 1 (ME specific short messages) or class 2 (SIM specific short messages), see <dcs> in GSM 03.38, will be stored either in "ME" or in "SM" storage. Therefore the "^SMGO: 2" indication could occur, without issuing the indication "^SMGO: 1" before. The indication "^SMGO: 1" means that both buffers ("ME" and "SM") are full.
- For more information regarding SIM and ME specific message classes refer to <dcs> and the following specifications: GSM 03.38 and 3GPP TS 23.038 .

13.21 AT^SMGR Read short message without setting status to REC READ

The AT^SMGR command is a proprietary command which has the same syntax as AT+CMGR. The only functional difference is that the status "REC UNREAD" of a short message is not overwritten to "REC READ".

Syntax

Test Command
AT^SMGR=?
Response(s)
^SMGR: OK

Write Command
AT^SMGR=<index>
Response(s)
see AT+CMGR

PIN	ASC0	ASC1	MUX1	MUX2	MUX3	🔔	Last
+	+	+	+	+	+	-	-

Note

- Users should be aware that when using this AT command quickly after SIM PIN authentication the SIM data may not yet be accessible, resulting in a short delay before the requested AT command response is returned. See Section 21.1, Restricted access to SIM data after SIM PIN authentication for further detail.

13.22 AT^SSCONF SMS Command Configuration

AT^SSCONF controls the presentation of the SMS parameters <ra> and <tora>. <ra> and <tora> are indicated within the result codes of AT+CMGL, AT^SMGL, AT+CMGR, AT^SMGR and the URC "+CDS".

Syntax

Test Command
AT^SSCONF=?
Response(s)
^SSCONF: (list of supported <mode>s) OK
Read Command
AT^SSCONF?
Response(s)
^SSCONF: <mode> OK
Write Command
AT^SSCONF=<mode>
Response(s)
OK

PIN	ASC0	ASC1	MUX1	MUX2	MUX3	🔔	Last
-	+	+	+	+	+	-	-

Parameter Description

<mode>(num)

Display recipient address

0(&F)(P)	BGS2-E does not display <ra> and <tora>.
1	BGS2-E displays <ra> and <tora>.

13.23 AT^SSDA Set SMS Display Availability

This command allows to notify the BGS2-E of its controlling application's capability to immediately display incoming SMS on a display.
If the application is able to display incoming short messages, a class 0 message shall be displayed immediately. However, if it does not, class 0 messages shall be treated as if no message class is determined (GSM 03.38[17]).
The effect of this command if <da>=1 is to determine the behavior of parameter <mt> of AT+CNMI:
If <da>=1 and <mt>=1 or <mt>=3 incoming class 0 mesages need to be acknowledged with AT+CNMA (see also AT+CNMI and AT+CSMS)
If multiplex mode is enabled (AT+CMUX) and <da>=1 with <mt>=1 or <mt>=3 is set on any logical channel, all other channels have to use <mt>=0.

Syntax

Test Command

AT^SSDA=?

Response(s)

^SSDA: (list of supported <da>s)
OK

Read Command

AT^SSDA?

Response(s)

^SSDA: <da>
OK

Write Command

AT^SSDA=<da>

Response(s)

OK

PIN	ASC0	ASC1	MUX1	MUX2	MUX3		Last
-	+	+	+	+	+	-	-

Parameter Description

<da>(num)

Display Availability

0(&F)	Application is not able to display incoming short message
1	Application is able to display incoming short message

Note

- If the ME operates on different instances (MUX channels 1, 2, 3 or ASC0/ASC1) avoid different settings for routing and indicating short messages. For example, if messages shall be routed directly to one instance of the TE (set with AT+CNMI, AT^SSDA), it is not possible to activate the presentation of URCs with AT+CMER or AT+CNMI on another instance. Any attempt to activate settings that conflict with existing settings on another interface, will result in "+CME ERROR", or accordingly "+CMS ERROR".

13.24 AT^SSMSS Set Short Message Storage Sequence

The short message storage "MT" (see AT+CPMS) is a logical storage. It consists of two physical storages "ME" and "SM". This command allows to select the sequence of addressing this storage.

Syntax

Test Command

AT^SSMSS=?

Response(s)

^SSMSS: (list of supported <seq>s)

Read Command

AT^SSMSS?

Response(s)

^SSMSS: <seq>
OK

Write Command

AT^SSMSS=<seq>

Response(s)

OK

PIN	ASC0	ASC1	MUX1	MUX2	MUX3		Last
-	+	+	+	+	+	-	-

Parameter Description

<seq>(num)

MT sequence

0(&F)(P)	"MT" storage is "ME" then "SM
1	"MT" storage is "SM" then "ME"

Note

- Access to the SIM storage is faster. For compatibility with previous software re-leases, the "MT" sequence <seq>=0 is the factory default.

14. SIM related Commands

AT commands described in this chapter are related to the Subscriber Identity Module (SIM) connected to the BGS2-E.

Note:
If using data from the SIM please bear in mind that the content of all Elementary Files is *subject to change* at any moment!
This is because the network can change the SIM's data in the background via SIM Application Toolkit (SAT) procedure "Data download to SIM". For a detailed description please refer to 3GPP TS 11.14 (GSM 11.14) [22].
To get informed that changing Elementary Files has taken place the Customer Application (TE) needs to hook up SAT Proactive Command "REFRESH". For more information please refer to Chapter 15., SIM Application Toolkit (SAT) Commands and Section 15.7, SAT Get Information - Refresh (1) in particular.

14.1 AT+CRSM Restricted SIM Access

AT+CRSM offers easy access of the Elementary Files on the SIM. Access to the SIM database is restricted to the commands which are listed at <command>. However, additional SIM commands are available via AT^SXSM.
All parameters of AT+CRSM are used as specified by GSM 11.11 [21]. BGS2-E handles internally all required SIM interface locking and file selection routines.
As response to the command, the BGS2-E sends the actual SIM information parameters and response data. Error result code "+CME ERROR" may be returned if the command cannot be passed to the SIM, e.g. if the SIM is not inserted. However, failure in the execution of the command in the SIM is reported in <sw1> and <sw2> parameters.

Please beware of *possible changes to Elementary Files* by the network at any time, refer Chapter 14., SIM related Commands.

Syntax

Test Command

```
AT+CRSM=?
```

Response(s)

```
OK
```

Write Command

```
AT+CRSM=<command>[, <fileID>[, <P1>, <P2>, <P3>[, <data>]]]
```

Response(s)

```
+CRSM: <sw1>,<sw2>[,<response>]
OK
ERROR
+CME ERROR: <err>
```

PIN	ASC0	ASC1	MUX1	MUX2	MUX3	Last	
-	+	+	+	+	+	-	-

Reference(s)

GSM 07.07

Parameter Description

<command>(num)

SIM command number.

176	READ BINARY
178	READ RECORD

192	GET RESPONSE
214	UPDATE BINARY
220	UPDATE RECORD
242	STATUS

`<fileID>`(num)

Identifier for an elementary data file on SIM, if used by `<command>`.

`<P1>`(num)

Parameter to be passed on by the BGS2-E to the SIM.

0...255

`<P2>`(num)

Parameter to be passed on by the BGS2-E to the SIM.

0...255

`<P3>`(num)

Parameter to be passed on by the BGS2-E to the SIM.

0...255

`<data>`(str)

Information which shall be written to the SIM (hexadecimal character format).

`<sw1>`(num)

Status information from the SIM about the execution of the actual command. It is returned in both cases, on successful or failed execution of the command.

0...255

`<sw2>`(num)

Status information from the SIM about the execution of the actual command. It is returned in both cases, on successful or failed execution of the command.

0...255

`<response>`(str)

Response data in case of a successful completion of the previously issued command.
"STATUS" and "GET RESPONSE" commands return data, which gives information about the currently selected elementary data field. This information includes the type of file and its size.
After "READ BINARY" or "READ RECORD" commands the requested data will be returned.
`<response>` is empty after "UPDATE BINARY" or "UPDATE RECORD" commands.

14.2 AT+CSIM Generic SIM Access

AT+CSIM allows direct control of the SIM.
Compared to Restricted SIM Access command AT+CRSM, the definition of AT+CSIM allows the ME to take more control over the SIM interface.
For parameter and SIM result coding please refer GSM 11.11 [21].
However, only the following SIM commands are fully supported by AT+CSIM: SELECT, STATUS, READ BINARY, UPDATE BINARY, READ RECORD, UPDATE RECORD, SEEK, INCREASE and GET RESPONSE. Other SIM commands will work in conjunction with the SIM but the correct interaction of the SIM with the BGS2-E is not guaranteed.

Syntax

Test Command

```
AT+CSIM=?
```

Response(s)

```
OK
```

Write Command

```
AT+CSIM=<length>, <command>
```

Response(s)

```
+CSIM: <length>,<response>
OK
ERROR
+CME ERROR: <err>
```

PIN	ASC0	ASC1	MUX1	MUX2	MUX3		Last
-	+	+	+	+	+	-	-

Reference(s)

GSM 07.07

Parameter Description

<length>(num)

Length of <command> or <response> string.

<command>(str)

Command passed on by the ME to the SIM.

<response>(str)

Response data of the command returned by the SIM.

Example

The following examples explain how to use AT+CSIM.

```
AT+CSIM=14,"A0A40000027F10"
+CSIM: 4,"9F19"

OK
AT+CSIM=14,"A0A40000026F3A"
+CSIM: 4,"9F0F"

OK
AT+CSIM=10,"A0C000000F"
```

Select DF-Telekom
Command successful, length '19' of the response data

Select EF-ADN (Abbreviated dialling numbers)
Command successful, length '0F' of the response data

Get Response

```
+CSIM: 34,"000002306F3A040011F0220102011C9000"
OK
```

14.3 AT+CXXCID Display card ID

Syntax

Test Command
AT+CXXCID=?
Response(s)
OK

Exec Command
AT+CXXCID
Response(s)
+CXXCID: <cid> OK ERROR +CME ERROR: <err>

PIN	ASC0	ASC1	MUX1	MUX2	MUX3		Last
-	+	+	+	+	+	-	-

Command Description

TA returns the card identification number in SIM (SIM file EF ICCID, see GSM 11.11 Chap.10.1.1) as string type.

Note

- See also: AT^SCID.

14.4 AT^SCID Display SIM card identification number

Syntax

Test Command

```
AT^SCID=?
```

Response(s)

```
OK
```

Exec Command

```
AT^SCID
```

Response(s)

```
^SCID: <cid>
OK
ERROR
+CME ERROR: <err>
```

PIN	ASC0	ASC1	MUX1	MUX2	MUX3		Last
-	+	+	+	+	+	-	-

Command Description

TA returns the card identification number in SIM (SIM file EF_{ICCID}, see GSM 11.11 Chap.10.1.1) as string type.

Parameter Description

`<cid>`(str)

card identification number of SIM card

14.5 AT^SCKS Query SIM and Chip Card Holder Status

This command controls the SIM connection presentation mode and queries the connection status of the SIM and the card holder tray of the BGS2-E.

Syntax

Test Command

```
AT^SCKS=?
```

Response(s)

```
^SCKS:(list of supported <mode>s)
OK
```

Read Command

```
AT^SCKS?
```

Response(s)

```
^SCKS: <mode>,<SimStatus>
OK
ERROR
+CME ERROR: <err>
```

Write Command

```
AT^SCKS=<mode>
```

Response(s)

```
OK
ERROR
+CME ERROR: <err>
```

PIN	ASC0	ASC1	MUX1	MUX2	MUX3		Last
-	+	+	+	+	+	-	-

Unsolicited Result Code

^SCKS: <SimStatus>

If the SIM connection status has changed an unsolicited result code (URC) is issued.

Parameter Description

<mode>(num)(&W)(&V)	
0(&F)	Suppress unsolicited result codes
1	Output unsolicited result codes

<SimStatus>(num)(&V)	
0	Card holder tray removed or SIM connection error
1	SIM inserted (refer to note)
2	The SIM interface hardware has been deactivated (e.g. because an invalid SIM or a SIM with unsupported electrical specifications has been detected). The SIM interface can be reactivated only by restarting the ME, e.g. via "AT+CFUN= n,1".

Note

- <SimStatus> reflects the status of the SIM and the card holder tray. Therefore if an empty SIM card holder tray is inserted, two URCs will be presented, indicating the status 1 followed by 0. See example.

Example

`AT^SCKS=1` `OK`	Activates the presentation of unsolicited result codes

Now, after inserting an empty card tray the following URCs appear:

`^SCKS: 1`	Tray connected
`^SCKS: 0`	No SIM card found

14.6 AT^SSET SIM Data Ready Indication

After power-up and personalization (PIN entry if required) BGS2-E starts reading data from the SIM. AT^SSET controls the presentation of "^SSIM READY" URC which indicates that the ME has finished this initial reading. Afterwards all AT commands that depend on SIM data can be used, e.g. SMS and phonebook related AT commands. Refer to Section 21.1, Restricted access to SIM data after SIM PIN authentication for further details.

Syntax

Test Command

```
AT^SSET=?
```

Response(s)

```
^SSET:(list of supported <n>s)
OK
```

Read Command

```
AT^SSET?
```

Response(s)

```
^SSET: <n>
OK
ERROR
+CME ERROR: <err>
```

Write Command

```
AT^SSET=[<n>]
```

Response(s)

```
OK
ERROR
+CME ERROR: <err>
```

PIN	ASC0	ASC1	MUX1	MUX2	MUX3	🔔	Last
-	+	+	+	+	+	-	-

Unsolicited Result Code

^SSIM READY

This URC indicates that the ME has finished its initial SIM access. Before that, any attempt to access phonebook, SMS or other SIM data may result in "+CME ERROR" type "SIM busy".

Parameter Description

<n>(num)(&W)(&V)

URC presentation mode	
0(&F)	Disable "^SSIM READY" URC.
1	Enable "^SSIM READY" URC.

14.7 AT^SXSM Extended SIM Access

AT^SXSM extends AT+CRSM with additional SIM commands.
All parameters of AT^SXSM are used as specified by GSM 11.11 [21]. BGS2-E handles internally all required SIM interface locking and file selection routines.
BGS2-E may return error result code "+CME ERROR" if the command cannot be passed to the SIM, e.g. if no SIM is inserted. However, errors related to SIM action are reported in <sw1> and <sw2> parameters as defined in GSM 11.11 [21].

Syntax

Test Command

```
AT^SXSM=?
```

Response(s)

```
OK
```

Write Command

```
AT^SXSM=<command>[, <fileID>[, <P1>, <P2>, <P3>[, <data>]]]
```

Response(s)

```
^SXSM: <sw1>, <sw2>[,<response>]
OK
ERROR
+CME ERROR: <err>
```

PIN	ASC0	ASC1	MUX1	MUX2	MUX3	🔔	Last
+	+	+	+	+	+	-	-

Parameter Description

<command>(num)

136	RUN GSM ALGORITHM Start the authentication mechanism and cipher key generation on the SIM. It runs the algorithms A3 and A8 using a 16 byte random number and the subscriber authentication key Ki, which is stored in the SIM.

<fileID>(num)

Identifier for an elementary data file on SIM, if used by <command>.

<P1>(num)

Parameter to be passed on by the BGS2-E to the SIM.

<P2>(num)

Parameter to be passed on by the BGS2-E to the SIM.

<P3>(num)

Parameter to be passed on by the BGS2-E to the SIM.

<data>(str)

If <command>=136 (RUN GSM ALGORITHM):
16 byte random number.

<sw1>(num)

Status information from the SIM about the execution of the actual command. It is returned in both cases, on successful or failed execution of the command.

0...255

<sw2>(num)

Status information from the SIM about the execution of the actual command. It is returned in both cases, on successful or failed execution of the command.

0...255

<response>(str)

Response in case of a successful completion of the previously issued SIM command.

If <command>=136 (RUN GSM ALGORITHM):
BGS2-E returns SRES and cipher key Kc as calculated by the SIM.

Byte(s)	Description	Length
1 - 4	SRES - Signed RESponse	4
5 - 12	Kc - Cipher Key	8

Example

Use <command>=136 (RUN GSM ALGORITHM) to obtain SRES and cipher key Kc values as calculated by the SIM.

at^sxsm=136,,0,0,16,"00112233445566778899AABBCCDDEEFF" ^SXSM: 144,0,00112233445566778899AABB OK	Start SIM command "RUN GSM ALGORITHM" with 16 byte random number. SRES (bytes 1-4) and Cypher Key Kc (bytes 5-12) values as returned by the SIM.

15. SIM Application Toolkit (SAT) Commands

This chapter describes AT commands and responses related to the BGS2-E's SIM Application Toolkit (SAT) implementation.

SAT is a technology that allows an application running on the SIM to control the GSM Mobile Engine (ME); it is specified in 3GPP TS 11.14 (GSM 11.14) [22].
Remote SIM Application Toolkit, or short Remote-SAT, provides a link between an application running on the SIM and the Customer Application (TE). The purpose of Remote-SAT is to allow the TE to send AT commands to the SAT interface and to display dedicated SAT activity on the user interface of the TE. The overall scenario is illustrated in the context diagram below.

Following types of data are exchanged between the BGS2-E and the application running on the SIM:

- Proactive commands (PACs) are sent from the SIM application to the ME. Some PAC types are executed by the ME itself, comparable with AT commands. Other PAC types are immediately forwarded to the TE, e.g. "DISPLAY TEXT".
- Terminal Response is the ME's answer to the last PAC, sometimes to be provided by the TE.
- Envelope commands are sent from the ME or TE to the SIM Application, such as "MENU SELECTION".

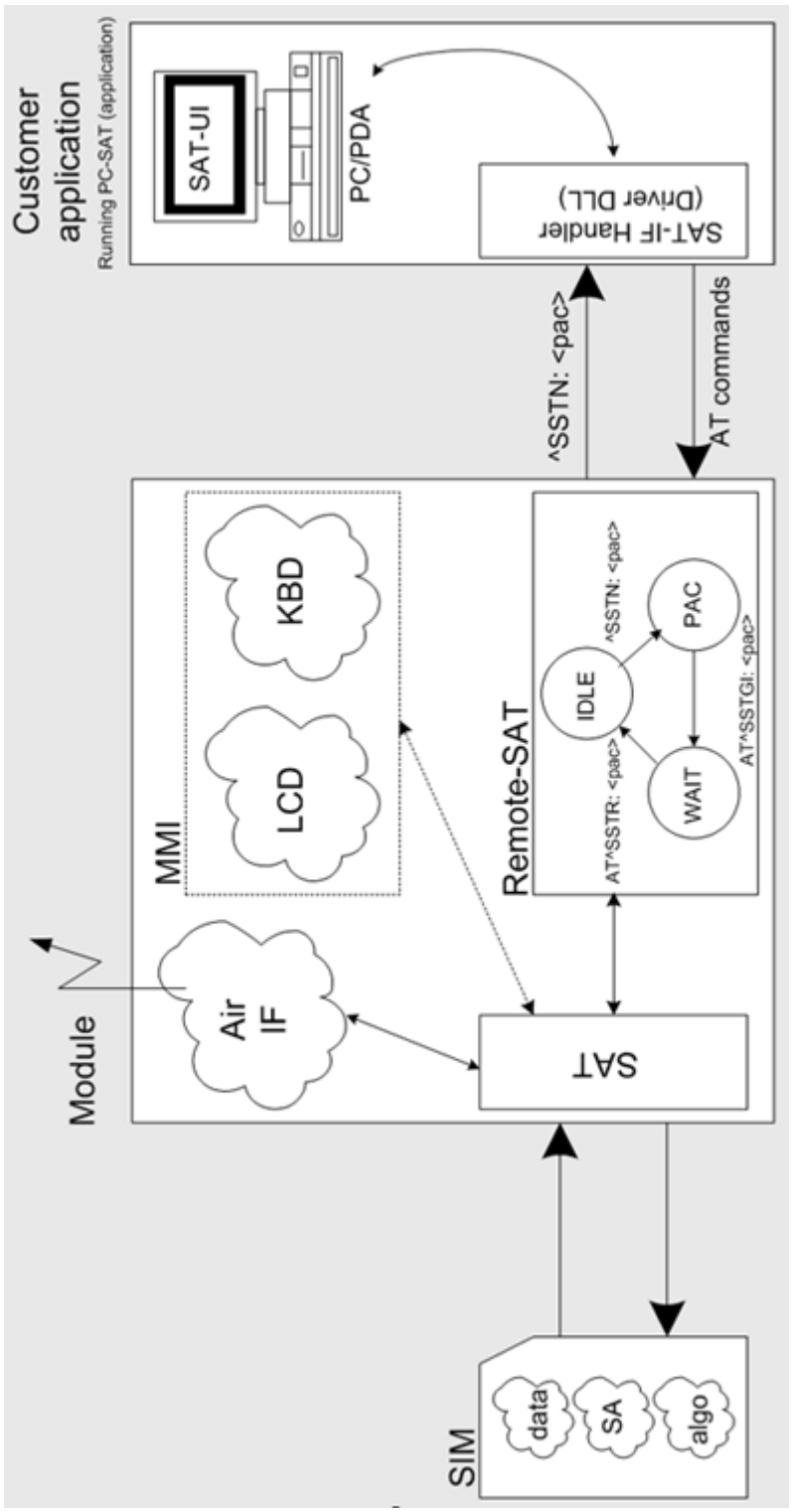

Figure 15.1: Remote-SAT Context Diagram

15.1 Usage of Remote-SAT

If SAT functionality is delivered by the SIM provider, the related SAT commands have to be handled. Otherwise other SIM functionality may not working correctly (e.g. SMS-PP downloads).
Therefore two possible modes are available.

15.1.1 Automatic Response Mode (AR Mode)

If the ME operates in this (default) mode, usage of any Remote-Sat AT commands is not necessary. In this case, all commands and responses are exchanged automatically between the ME and the SIM application. The type of Terminal Response (TR) to a SAT Proactive Command issued by the SIM application used in AR mode is listed at Table 15.6, Command Type Table, column "Auto Terminal Response". However, even while using AR Mode it is crucial to react on SAT REFRESH Proactive Commands, indicating that data read from the SIM has been changed!
Therefore, enable handling of AT^SIND, using parameter <indDescr>="simdata" to get informed about SAT REFRESH events.

To take full advantage of Remote-SAT the ER mode has to be enabled using AT^SSTA=1. This setting is stored non-volatile and takes effect after next switch-on of the ME.

15.1.2 Explicit Response Mode (ER Mode)

As a Wireless Modem does not have an MMI, Remote-SAT differs from a phone implementation of SAT. It uses a special set of AT commands to pass data, e.g. a list of menu items, to the TE and to receive responses, e.g. a selected menu item.
The TE is required to monitor the status of an ongoing SAT Proactive Command (PAC) and, if required, sends appropriate AT commands, depending upon users input.

15.1.3 Character Sets

Strings are passed as UCS2 characters, but using the GSM alphabet is also possible. Use of GSM alphabet is not recommended since a SIM can contain text which might be not displayable, e.g. greek characters. Use AT^SSTA command to select the type of alphabet both for input and output. UCS is specified in ISO/IEC 10646. There are 2 and 4 octet versions available, of which only the 2-octet variant is used, known as UCS2. The 65536 positions in the 2-octet form of UCS are divided into 256 rows, each with 256 cells. The first octet of a character representation gives the row number, the second the cell number. The first row, row 0, contains exactly the same characters as ISO/IEC 8859-1. The first 128 characters are thus the ASCII characters. The octet representing an ISO/IEC 8859-1 character is easily transformed to the representation in UCS by putting a 0 octet in front of it. UCS includes the same control characters as ISO/IEC 8859 which are located in row 0.

15.1.4 SIM Update Initiated by the Network

If a Customer Application (TE) uses data of the SIM card please consider that the contents of all elementary files are subject to change at any time. This happens because the network can change the SIM card data in the background via the SIM Application Toolkit (SAT) procedure "Data download to SIM". For a detailed description refer to GSM 11.14. In order to receive the information that an elementary file has been changed the TE has to activate Remote SAT and needs to look for the SAT Proactive Command "REFRESH", Section 15.7, SAT Get Information - Refresh (1).

15.1.5 Icon Handling

Several SAT Proactive commands may provide an icon identifier. Icons are intended to enhance the MMI by providing graphical information to the user. The display of icons is optional for the ME.
The SIM indicates to the ME whether the icon replaces an alpha identifier or text string, or whether it accompanies it (icon qualifier).

If both an alpha identifier or text string, and an icon are provided with a proactive command, and both are requested to be displayed, but the ME is not able to display both together on the screen, then the alpha identifier or text string takes precedence over the icon.

If the SIM provides an icon identifier with a proactive command, then the ME shall inform the SIM if the icon could not be displayed by sending the response "Command performed successfully, but requested icon could not be displayed" (via AT^SSTR).

Icon data can be fetched directly from the SIM via command AT+CRSM, for details please refer to GSM 11.11, Annex G [21]. Icon data can be read from the SIM on system start then cached.

15.1.6 Using SMS Related AT Commands

ME activities triggered by SAT often end in sending or receiving short messages. Usually, a short message containing a service request is sent to the network, for example a request to send the latest news. Subsequently, the network returns a short message containing the requested information. This short message needs to be read by the Customer Application.

Set SMS text mode
AT+CMGF=1

Activate the display of a URC on every received SMS
AT+CNMI=1,1

If needed activate extended SMS text mode parameter output
AT+CSDH=1
This is useful in order to obtain more detailed header information along with the incoming SMS (e.g. SMS class). Please refer to 3GPP standard GSM 03.38 for details.
As a result, a URC will be output each time a short message is received
"+CMTI": "MT", 1 where
• the first parameter "MT" specifies the storage type of the SMS
• the second parameter contains a unique location number.
In the given example, the short message was stored to the memory type "MT" at location number 1.
The short message storage "MT" is a logical storage. It is the sum of the two physical storages "ME" (GSM Mobile Engine message storage) and "SM" (SIM message storage). For more detailed information please refer AT+CPMS and AT^SSMSS.

To read the SMS data use
AT+CMGR=<location>
where <location> is the location number of the received SMS, e.g. 1 in the example above.

To list all stored short messages use
AT+CMGL="ALL"

To delete a certain SMS after reading use
AT+CMGD=<location>

15.2 Remote-SAT States

In order to communicate with the SIM Application Toolkit it is necessary to use AT commands which are explained in detail in the following chapters. In general, the type of AT command which should be issued depends on the current state of the Remote-SAT interface.
The current state of Remote-SAT is determined by

1. the Remote-SAT operating mode (AR or ER mode),
2. the application running on the SIM,
3. the Customer Application (in case of ER mode only), and
4. internal actions of the ME (especially SAT and Call Control).

15.2.1 Remote-SAT State Transition Diagram

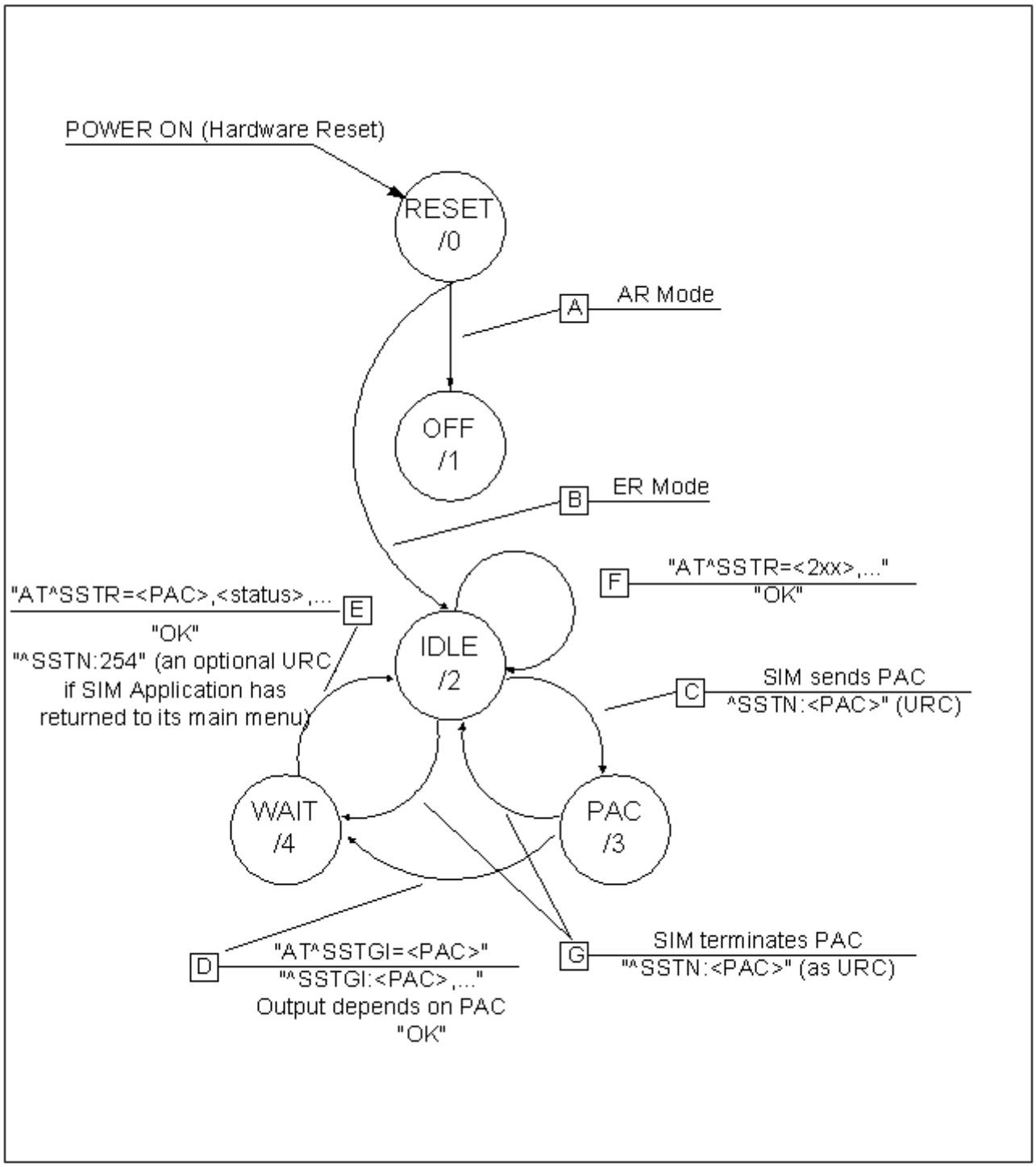

Figure 15.2: Remote-SAT State Transition Diagram

15.2.2 Remote-SAT State Transition Table

The following table outlines which AT commands can be issued during certain states. However, the test and read AT commands are available at any time. This way it is possible to determine the current state of the interface via AT^SSTA?.

Meaning of options usable in column "M/O/X" of the following tables:
M: The TE has to issue the AT command to get Remote-SAT service (mandatory).
O: Usage of AT command is optional.
X: Usage of AT command is not allowed or not useful at this time and may cause an error message.

Table 15.1: State: RESET description

RESET: State after power on the ME.		
AT command	M/O/X	Description
^SSTA=0,n	O	Enable AR Mode (with alphabet type <n>)
^SSTA=1,n	O	Enable ER Mode (with alphabet type <n>)
^SSTGI=<pac>	X	
^SSTR=<pac>	X	
^SSTR=<event>	X	

Table 15.2: State: OFF description

OFF: ME is in Auto Response Mode.		
AT command	M/O/X	Description
^SSTA=0,n	O	Enable AR Mode (with alphabet type <n>)
^SSTA=1,n	O	Enable ER Mode (with alphabet type <n>)
^SSTGI=<pac>	X	
^SSTR=<pac>	X	
^SSTR=<event>	X	

Table 15.3: State: IDLE description

IDLE: ME is in Explicit Response Mode.		
AT command	M/O/X	Description
^SSTA=0,n	O	Enable AR Mode (with alphabet type <n>)
^SSTA=1,n	O	Enable ER Mode (with alphabet type <n>)
^SSTGI=<pac>	O	Show PAC information
^SSTR=<pac>	X	
^SSTR=<event>	O	

Table 15.4: State: PAC description

PAC[1]: SIM application has issued a proactive command. This event is signalled to the TE via ^SSTN: <cmdType>.		
AT command	M/O/X	Description
^SSTA=0,n	O	Enable AR Mode (with alphabet type <n>)
^SSTA=1,n	O	Enable ER Mode (with alphabet type <n>)
^SSTGI=<pac>	M	Show PAC information
^SSTR=<pac>	X	
^SSTR=<event>	X	

Table 15.5: State: WAIT description

WAIT[1]: SIM application is waiting for the response to the ongoing proactive command.		
AT command	M/O/X	Description
^SSTA=0,n	O	Enable AR Mode (with alphabet type <n>)
^SSTA=1,n	O	Enable ER Mode (with alphabet type <n>)
^SSTGI=<pac>	O	Show PAC information
^SSTR=<pac>	M	
^SSTR=<event>	X	

1) To limit the time Remote-SAT is kept in states PAC or WAIT, any ongoing (but unanswered) PAC will be aborted after 5 minutes automatically.

15.3 Remote-SAT Command Types

The Command Type value (cmdType) identifies the type of command or associated response passed between the TE and the ME.

cmdType is the parameter that comes first in AT commands, in responses to AT^SSTGI and AT^SSTR commands, and in the "^SSTN" URC. Also, the cmdType values may be used as Next Action Indicator for the SETUP MENU and for SELECT ITEM.

The SAT implementation supports SAT class 3 (GSM 11.14 Release 99, letter class "c").

Table 15.6: Command Type Table

Proactive Toolkit commands vs. Terminal Responses			
Proactive Toolkit command (AT^SSTR=<cmdType>)	Terminal Response in Automatic Response Mode (see AT^SSTA=0)	Terminal Response user choices in Explicit Response Mode (see AT^SSTR=<cmdType>,<status>)	Terminal Response after user timeout in Explicit Response Mode (see URC ^SSTN: <cmdTerminateValue>)
REFRESH (1)	0	0	0
SET UP EVENT LIST (5)	0	0, 32, 48, 132	132
SET UP CALL (16)	48	0, 4, 16, 20, 32, 34, 35, 48, 132	132
SEND SS (17)	48	0, 4, 20, 32, 48, 132	132
SEND USSD (18)	48	0, 4, 20, 32, 48, 132	132
SEND SHORT MESSAGE (19)	48	0, 4, 32, 48, 132	132
SEND DTMF (20)	48	0, 4, 16, 32, 48, 132	132
LAUNCH BROWSER (21)	48	0, 4, 32, 34, 38, 48, 132, 138, 238, 239	132
PLAY TONE (32)	48	0, 4, 16, 32, 48, 132	132
DISPLAY TEXT (33)	0	0, 4, 16, 17, 18, 32, 48, 132	132
GET INKEY (34)	48	0, 4, 16, 17, 18, 19, 32, 48, 132	18
GET INPUT (35)	48	0, 4, 16, 17, 18, 19, 32, 48, 132	18
SELECT ITEM (36)	48	0, 4, 16, 17, 18, 19, 32, 48, 132	18
SET UP MENU (37)	0	0, 4, 32, 48, 132	132
SET UP IDLE MODE TEXT (40)	48	0, 4, 32, 48, 132	132
LANGUAGE NOTIFICATION (53)	0	0	0

15.4 AT^SSTA Remote-SAT Interface Activation

AT^SSTA write command can be used to determine the Remote-SAT activation mode <mode> and, if Explicit Response mode is enabled, to activate the Remote-SAT interface. Removing and inserting the SIM does not affect the activation status.
SAT commands which are not using the AT interface (non-MMI related SAT commands, e.g. PROVIDE LOCAL INFORMATION) are executed without activating Remote-SAT.
The read command can be used to request the current operating status and the used alphabet of the Remote-SAT interface.

Syntax

Test Command

AT^SSTA=?

Response(s)

^SSTA: (list of supported <state>s), (list of supported <Alphabet>s)
OK

Read Command

AT^SSTA?

Response(s)

^SSTA: <state>, <Alphabet>, <allowedInstance>, <SatProfile>
OK

Write Command

AT^SSTA=<mode>[, <Alphabet>]

Response(s)

OK

PIN	ASC0	ASC1	MUX1	MUX2	MUX3		Last
-	+	+	+	+	+	-	-

Parameter Description

<state>(num)

BGS2-E Remote-SAT interface states

0	RESET
1	OFF
2	IDLE
3	PAC
4	WAIT

<Alphabet>(num)

Parameter is stored non-volatile and takes effect after next restart of the ME.

0(D)	GSM character set Input of a character requests one byte, e.g. "Y".
1	UCS2 To display the 16 bit value of characters represented in UCS2 alphabet a 4 byte string is required, e.g. "0059" is coding the character "Y". For details please refer to ISO/IEC 10646.

<allowedInstance>(num)

Remote-SAT handling (i.e. "^SSTN" URC, AT^SSTGI and AT^SSTR sequence) is only usable via the serial channnel on which the Explicit Response (ER) mode was activated.
To change the serial channel execute AT^SSTA=1 on the desired channel and perform a restart.

0	SAT is already used on another instance (logical channel in case of the multiplex protocol). Only test and read commands can be used.
1	SAT may be started on this instance via the write version of this command.

<SatProfile>(str)

SAT profile according to GSM 11.14 [22].
The profile tells the SIM Application which features (e.g. Proactive Commands) are supported by the SIM Application Toolkit implementation of the BGS2-E.

<mode>(num)

Select Remote-SAT activation mode.
Parameter is stored non-volatile and takes effect after next restart of the ME. Removing and inserting the SIM does not affect the activation status.

0(D)	Automatic Response (AR) mode. All commands and responses are exchanged automatically between the ME and the SIM application. This eliminates the need to enter any Remote-SAT commands including the AT^SSTA command. If AR mode is enabled the ME enters the OFF state (<state>=1) after restart.
1	Explicit Response (ER) mode. This mode is intended for use with an MMI. If ER mode is enabled the MMI is required to handle, via BGS2-E's Remote-SAT interface, all commands and responses transmitted to or from the SIM or USIM. If ER mode is enabled the ME enters the IDLE state (<state>=2) after reboot.

15.5 ^SSTN SAT Notification

Unsolicited Result Codes

URC 1

Proactive command notification

^SSTN: <cmdType>

Every time the SIM Application issues an MMI relevant proactive command, via the ME, the TE will receive a notification. This indicates the type of proactive command issued.
AT^SSTGI must then be used by the TE to request the parameters of the proactive command from the ME. Upon receiving the ^SSTGI response from the ME, the TE must send AT^SSTR to confirm the execution of the proactive command and provide any required user response, e.g. a selected menu item.

URC 2

Terminate proactive command notification

^SSTN: <cmdTerminateValue>

When the SIM Application has issued a proactive command to the ME, it is possible that this command will be terminated later. URC "^SSTN" is sent with a different proactive command type number (added terminate offset 100) to indicate the termination of the specified command.
The state changes to idle. Therefore the TE should avoid sending any further commands related to the terminated proactive command, e.g. AT^SSTGI or AT^SSTR.

URC 3

Notification to the TE when the SIM Application has finished a command cycle and does not issue a subsequent proactive command.

^SSTN: 254

The TE does not need to respond directly, i.e. AT^SSTR is not required. The next action is left as an implementation decision to the manufacturer of the Customer Application (TE). Examples:

- If a Toolkit menu "^SSTN: 37" (SET UP MENU) proactive command was received at startup, the customer application can return to this Toolkit menu again after receiving the "^SSTN: 254" URC.
- In a Windows Mobile environment, the ToolkitUI application can be closed after receiving this URC.

Important notes:

- The Idle Mode text transferred with the SET UP IDLE MODE TEXT proactive command should not be removed as a result of this URC.
- If the text transferred with the DISPLAY TEXT proactive command is coded with an immediate response object set to "1" (see parameter <immediateResponse> of the AT^SSTGI=33 command), the text should not be removed as a result of this URC.

URC 4

SIM reset notification

^SSTN: 255

Notification to the TE indicating that the SIM is lost, e.g. if a proactive command "REFRESH - SIM Reset" has been issued by the SIM Application, please refer to AT^SSTGI=1.
This URC should be used to set the Customer Application to its initial state since the SIM Application will start from the beginning, too.
The TE does not need to respond directly, i.e. related AT^SSTGI and AT^SSTR are neither required nor allowed.
After reset SIM PIN authentication is required.

Parameter Description

<cmdType>(num)

Proactive Command number

`<cmdTerminateValue>`(num)

Defined as `<cmdType>` + terminate offset. The terminate offset equals 100.

15.6 AT^SSTGI SAT Get Information

Regularly this command is used upon receipt of an URC "^SSTN" to request the parameters of the Proactive Command.
Then the TE is expected to acknowledge the AT^SSTGI response with AT^SSTR to confirm that the Proactive Command has been executed. AT^SSTR will also provide any user information, e.g. a selected menu item.
The Proactive Command type value specifies to which "^SSTN" the command is related.

Syntax

Test Command

```
AT^SSTGI=?
```

Response(s)

```
^SSTGI:(list of supported <state>s), (list of supported <cmdType>s)
OK
```

Read Command

```
AT^SSTGI?
```

Response(s)

```
^SSTGI: <state>,<cmdType>
OK
```

Write Command

```
AT^SSTGI=<cmdType>
```

Response(s)

```
OK
ERROR
+CME ERROR: <err>
```

PIN	ASC0	ASC1	MUX1	MUX2	MUX3		Last
-	+	+	+	+	+	-	-

Parameter Description

<state>(num)

BGS2-E Remote-SAT interface states

0	RESET
1	OFF
2	IDLE
3	PAC
4	WAIT

<cmdType>(num)

Related Proactive Command

15.7 AT^SSTGI SAT Get Information - Refresh (1)

The AT^SSTGI=1 command shall be used after receiving the URC "^SSTN: 1". This URC notifies the TE that one or more Elementary Files on the SIM have been changed as a result of a SIM application activity, usually caused by the network provider. The response to the AT^SSTGI=1 command indicates what type of SIM refresh has occurred. The change requires that the Elementary Files of the SIM be synchronized with the equivalent information (if any) stored inside the TE. Depending on the type of SIM refresh the TE may need to use the AT+CRSM command to read out the Elementary Files and store the refreshed information.

The response parameters <pathLen>, <fileNum> and <fileList> are mandatory if <commandDetails> equals 1 or 2. In all other cases they are optional and can be ignored.

Syntax

Write Command

AT^SSTGI=1

Response(s)

^SSTGI: <cmdType>, <commandDetails>[, <pathLen>, <fileNum>, <fileList>]
OK
ERROR
+CME ERROR: <err>

PIN	ASC0	ASC1	MUX1	MUX2	MUX3	Last	
-	+	+	+	+	+	-	-

Parameter Description

<cmdType>(num)

1	Proactive command ID, see Section 15.3, Remote-SAT Command Types and Table 15.6.

<commandDetails>(num)

For every return value of <commandDetails> other than 4 (SIM Reset) the TE shall complete the proactive command cycle using AT^SSTGI=1.

0	SIM Initialization and Full File Change Notification
1	File Change Notification
2	SIM Initialization and File Change Notification
3	SIM Initialization
4	Value "4" means SIM Reset, but the value itself never appears. This is because value "4" is mapped to the URC "^SSTN: 255" which will be sent when a SIM reset occurs. In this case, the TE does not need to respond, i.e. the SIM Refresh commands AT^SSTGI and AT^SSTR are neither required nor allowed. Instead, as the SIM application restarts, the Toolkit application inside the TE should also return to initial state after receiving the URC "^SSTN: 255". For more information on SIM reset and the URC "^SSTN: 255" refer to Section 15.5, ^SSTN SAT Notification.
5...255	Reserved values

<pathLen>(num)

Number of bytes coded in <fileList>

`<fileNum>`(num)

Number of updated Elementary Files (EF) with path given in `<fileList>`

`<fileList>`(num)

String containing Elementary File paths. Each path contains at least two file entries; each file entry (MF, EF or DF) consists of two bytes, e.g. '3F002FE2' or '3F007F206FAD'. Every path in the file description begins with the Master File (MF). There can be any number of Dedicated File (DF) entries between Master File and Elementary File.

Example

In general, the TE only needs to take care of SIM content synchronization if it is permanently interested in the latest contents of one or more specific SIM files, e.g. because the TE has its own cache for specific SIM information. In this case, the TE needs to know exactly the paths and file IDs of these specific SIM files. For the SIM, the paths and file IDs can be found in 3GPP TS 11.11.

When `<commandDetails>` equals 0, 2 or 3 or the "`^SSTN`: 255" notification is received (refer to Section 15.5, ^SSTN SAT Notification), the TE shall synchronize its own cache for SIM information in any case.

When `<commandDetails>` equals 1, reloading the SIM information is only necessary if the TE finds that an important file is included in the Refresh `<fileList>`. For example, assuming that the TE is always interested in the latest contents of the "FD" (Fixed Dialing) phonebook, it has to know that EF_FDN is located at path "3F00\7F10\6F3B". Then, during normal operation, the TE should always check the Refresh `<fileList>`, if it includes the path and file ID of EF_FDN. An example is given below:

SYSSTART	ME has been started.
AT+CLCK="FD",2	Request "FD" lock state.
+CLCK: 1	"FD" lock is enabled.
OK	
AT+CPBS="FD"	Select the "FD" phonebook.
OK	
AT+CPBR=1	Read first "FD" phonebook entry.
+CPBR: 1,"123",129,"ABC"	This is the "FD" phonebook content before Refresh.
OK	
^SSTN: 1	Indicates that a SIM Refresh has occurred.
AT^SSTGI=1	Request type of SIM Refresh.
^SSTGI: 1,1,6,1,"3F007F106F3B"	The Refresh `<fileList>` includes path and file ID 3F00\7F10\6F3B which corresponds to EF_FDN, indicating that its contents may have changed.
OK	
AT^SSTR=1,0	Terminate the proactive command.
OK	
^SSTN: 254	Session finished.
AT+CPBR=1	Read first "FD" phonebook entry.
+CPBR: 1,"0123456789",129,"ABC"	This is the "FD" phonebook content after the Refresh.
OK	

Please keep in mind that this process is only necessary if the TE has it's own cache for SIM information (e.g. SIM phonebook is cached inside the TE). If the TE does not have a cache for SIM information (e.g. SIM phonebook is read by the TE only at the user's request, directly from the SIM), it is not necessary to synchronize the content. The TE SIM content synchronization is not required for a proper operation of the ME. As long as the TE answers the "`^SSTN`: 1" notification with the commands `AT^SSTGI`=1 and `AT^SSTR`=1,0, the ME will use the latest SIM contents and will continue to work flawlessly, regardless of a possible TE SIM content synchronization.

15.8 AT^SSTGI SAT Get Information - Set Up Event List (5)

This command shall be used after receiving the URC ^SSTN: 5.
However, please refer to the note below.
The response informs the TE of the events that it must monitor within itself. If any of these events occur the TE must report them to the ME.

Syntax

Write Command

`AT^SSTGI=5`

Response(s)

`^SSTGI: <cmdType>, <commandDetails>, <eventList>`
`OK`
`ERROR`
`+CME ERROR: <err>`

PIN	ASC0	ASC1	MUX1	MUX2	MUX3		Last
-	+	+	+	+	+	-	-

Parameter Description

`<cmdType>`(num)

5	Proactive command ID, see Table 15.6, Command Type Table.

`<commandDetails>`(num)

This byte is RFU.

`<eventList>`(num)

The event list tells the TE which events have to be reported to the ME via the related commands AT^SSTR=(232, 233, 235, 236)

0...65535	Used as bit field
bit 1-4	RFU
bit 5	0: User Activity not in Event List
	1: Any user activity (keyboard press) has to be signaled to the ME
bit 6	0: Idle Screen Available not in Event List
	1: Any idle screen available event has to be signaled to the ME.
bit 7	RFU
bit 8	0: Language Selection not in Event List
	1: Language Selection events have to be signaled to the ME.
bit 9	0: Browser Termination not in Event List
	1: Browser Termination events have to be signaled to the ME
bit 10-16	RFU

Note

- It is possible to issue AT^SSTGI during states IDLE, PAC and WAIT for this proactive command without previously receiving a URC ^SSTN:`<cmdType>`, see `AT^SSTGI`.

15.9 AT^SSTGI SAT Get Information - Set Up Call (16)

This command shall be used after receiving the URC ^SSTN: 16. If the SIM Application attempts to set up a call it uses this response to inform the TE of the call parameters.

The sequence of events is as follows:
1. After the Remote-SAT notification 16 was issued the TE has to request the command parameter using AT^SSTGI=16.
2. If the SIM Application does not supply a confirmation text or icon parameter, the TE gives other information to the user, e.g. the telephone number. In this case refer to step 4.
3. If the SIM Application supplies a non empty confirmation text or icon parameter, the TE uses only these to ask the user whether or not he wishes to set up the call.
4. If the user confirms to set up the call, AT^SSTR=16,0 shall be responded.
5. If the user denies to set up the call, AT^SSTR=16,34 shall be responded.
6. After confirmation phase the TE may present a dialing animation on the screen until a mandatory parameter line ^SSTR: 16, <TermQualifier>, <TerminationCauseText> is issued.
7. If <TermQualifier> is not equal to 0 the call setup process has not been successfully. If <TerminationCause-Text> is not an empty string, this text shall be shown to the user for an appropriate time, e.g. 2 seconds. The text contains information regarding the dial termination cause, e.g. call barring through Call Control by SIM mechanism. If <TerminationCauseText> is an empty string, the TE shall give an own indication to the user.
8. If <TermQualifier> is equal to 0, the call setup process has been started:
If <TerminationCauseText> is not an empty string, this text shall be used to inform the user during the call setup. If <TerminationCauseText> is an empty string, <callSetupText> and/or <confirmationIconId> shall be used to inform the user during call setup. However, if <callSetupText> contains no data, too, no indication shall be shown.
9. The TE shall give the user an opportunity to end an ongoing call, set up by the Proactive Command. In this case the TE shall issue an ATH command to the ME.

Syntax

Write Command

AT^SSTGI=16

Response(s)

^SSTGI: <cmdType>, <commandDetails>, <confirmationText>, <calledNumber>, <callSetupText>, <confirmationIconQualifier>, <confirmationIconId>, <callSetupIconQualifier>, <callSetupIconId>
OK
ERROR
+CME ERROR: <err>

PIN	ASC0	ASC1	MUX1	MUX2	MUX3		Last
-	+	+	+	+	+	-	-

Parameter Description

<cmdType>(num)	
16	Proactive command ID, see Table 15.6, Command Type Table.

<commandDetails>(num)	
0	Set up call, but only if not currently busy on another call
1	Set up call, but only if not currently busy on another call, with redial
2	Set up call, putting all other calls (if any) on hold
3	Set up call, putting all other calls (if any) on hold, with redial
4	Set up call, disconnecting all other calls (if any)

5	Set up call, disconnecting all other calls (if any), with redial
6...255	Reserved Values

`<confirmationText>`(str)

String for user confirmation stage

`<calledNumber>`(num)

String containing called number

`<callSetupText>`(str)

String for call set up stage

`<confirmationIconQualifier>`(num)

0...255	Used as bit field
bit 1	0: Icon is self explanatory and replaces text
	1: Icon is not self-explanatory and shall be displayed with the text Determined value only if associated icon ID is not 0 (an icon exists).
bit 2-8	RFU

`<confirmationIconId>`(num)

0...255

0	No Icon

`<callSetupIconQualifier>`(num)

0...255	Used as bit field
bit 1	0: Icon is self explanatory and replaces text
	1: Icon is not self-explanatory and shall be displayed with the text Determined value only if associated icon ID is not 0 (an icon exists).
bit 2-8	RFU

`<callSetupIconId>`(num)

0...255

0	No Icon

Note

- If the Fixed Dialling Number service is enabled, the number included in the SET UP CALL proactive command shall not be checked against those of the FDN list.

15.10 AT^SSTGI SAT Get Information - Send SS (17)

This command shall be used after receiving the URC ^SSTN: 17
The module is sending a supplementary service request to the network, and is alerting the user of this. Text and an icon identifier shall be passed to the TE to display to the user.

Syntax

Write Command

`AT^SSTGI=17`

Response(s)

`^SSTGI: <cmdType>[, <commandDetails>][, <text>], <iconQualifier>, <iconId>`
`OK`
`ERROR`
`+CME ERROR: <err>`

PIN	ASC0	ASC1	MUX1	MUX2	MUX3		Last
-	+	+	+	+	+	-	-

Parameter Description

<cmdType>(num)

17	Proactive command ID, see Table 15.6, Command Type Table.

<commandDetails>(num)

This byte is RFU.

<text>(str)

String to provide the user with information.
If the string is provided by the SIM, the TE shall use it to inform the user. This is also an indication that the TE should not give any other information to the user on the fact that the ME is sending an SS request.
If the alpha identifier is not provided by the SIM, the ME may give information to the user concerning what is happening.

<iconQualifier>(num)

0...255	Used as bit field
bit 1	0: Icon is self explanatory and replaces text
	1: Icon is not self-explanatory and shall be displayed with the text Determined value only if associated icon ID is not 0 (an icon exists).
bit 2-8	RFU

<iconId>(num)

0...255	
0	No Icon

15.11 AT^SSTGI SAT Get Information - Send USSD (18)

This command shall be used after receiving the URC ^SSTN: 18
The module is sending an unstructured supplementary service request to the network, and is alerting the user of this.
Text and an icon identifier shall be passed to the TE to display to the user.

Syntax

Write Command

```
AT^SSTGI=18
```

Response(s)

```
^SSTGI: <cmdType>[, <commandDetails>][, <text>], <iconQualifier>, <iconId>
OK
ERROR
+CME ERROR: <err>
```

PIN	ASC0	ASC1	MUX1	MUX2	MUX3		Last
-	+	+	+	+	+	-	-

Parameter Description

<cmdType>(num)

18	Proactive command ID, see Table 15.6, Command Type Table.

<commandDetails>(num)

This byte is RFU.

<text>(str)

String to provide the user with information.
If the string is provided by the SIM, the TE shall use it to inform the user. This is also an indication that the TE should not give any other information to the user on the fact that the ME is sending a USSD request.
If the alpha identifier is not provided by the SIM, the ME may give information to the user concerning what is happening.

<iconQualifier>(num)

0...255	Used as bit field
bit 1	0: Icon is self explanatory and replaces text
	1: Icon is not self-explanatory and shall be displayed with the text Determined value only if associated icon ID is not 0 (an icon exists).
bit 2-8	RFU

<iconId>(num)

0...255	
0	No Icon

15.12 AT^SSTGI SAT Get Information - Send Short Message (19)

This command shall be used after receiving the URC ^SSTN: 19
The SIM Application is sending a Short Message and the TE is informed of this. The user can be passed a string containing information to display.

Syntax

Write Command

```
AT^SSTGI=19
```

Response(s)

```
^SSTGI: <cmdType>, <commandDetails>, <textInfo>, <iconQualifier>, <iconId>
OK
ERROR
+CME ERROR: <err>
```

PIN	ASC0	ASC1	MUX1	MUX2	MUX3		Last
-	+	+	+	+	+	-	-

Parameter Description

<cmdType>(num)

19	Proactive command ID, see Table 15.6, Command Type Table.

<commandDetails>(num)

This byte is RFU.

<textInfo>(str)

String to provide the user with information.
If the string is provided by the SIM, the TE shall use it to inform the user. This is also an indication that the TE should not give any other information to the user on the fact that the ME is sending a short message.
If the alpha identifier is not provided by the SIM, the ME may give information to the user concerning what is happening.

<iconQualifier>(num)

0...255	Used as bit field
bit 1	0: Icon is self explanatory and replaces text
	1: Icon is not self-explanatory and shall be displayed with the text Determined value only if associated icon ID is not 0 (an icon exists).
bit 2-8	RFU

<iconId>(num)

0...255	
0	No Icon
1	An icon is provided by the SIM, the icon indicated in the command may be used by the ME to inform the user, in addition to, or instead of the alpha identifier, as indicated with the icon qualifier.

15.13 AT^SSTGI SAT Get Information - Send DTMF (20)

This command shall be used after receiving the URC ^SSTN: 20
The SIM Application is sending DTMF tones to the network, and can provide the TE with some information about this.
Text and an icon identifier can be passed to the TE to display to the user.

Syntax

Write Command

```
AT^SSTGI=20
```

Response(s)

```
^SSTGI: <cmdType>, <commandDetails>, <text>, <iconQualifier>, <iconId>
OK
ERROR
+CME ERROR: <err>
```

PIN	ASC0	ASC1	MUX1	MUX2	MUX3		Last
-	+	+	+	+	+	-	-

Parameter Description

<cmdType>(num)

20	Proactive command ID, see Table 15.6, Command Type Table.

<commandDetails>(num)

This byte is RFU.

<text>(str)

String to provide the user with information.
If the string is provided by the SIM, the TE shall use it to inform the user. This is also an indication that the TE should not give any other information to the user on the fact that the ME is performing a SEND DTMF command. If the alpha identifier is not provided by the SIM, the ME may give information to the user concerning what is happening.

<iconQualifier>(num)

0...255	Used as bit field
bit 1	0: Icon is self explanatory and replaces text
	1: Icon is not self-explanatory and shall be displayed with the text Determined value only if associated icon ID is not 0 (an icon exists).
bit 2-8	RFU

<iconId>(num)

0...255	
0	No Icon

15.14 AT^SSTGI SAT Get Information - Launch Browser (21)

This command shall be used after receiving the URC ^SSTN: 21.
If the SIM Application attempts to start an Internet Browser, it uses this response to inform the TE of the launch parameters.

The sequence of events is as follows:
1. After the Remote-SAT notification 21 was issued the TE shall ask for the command parameters via AT^SSTGI=21.
2. The ME shall ask the user for confirmation using the Alpha Identifier/Icon Identifier (user confirmation phase) if present, when it receives a LAUNCH BROWSER command which requests to connect the existing browser session to a new URL or to terminate a browser session.
3. If the user confirms to start the browser, AT^SSTR=21,0 shall be responded.
4. If the user denies to start the browser, AT^SSTR=21,34 shall be responded.
5. The SIM Application will end the proactive session.
6. The ME shall request content using the given URL. However, if no URL string is supplied a default URL shall be used.
7. On response AT^SSTR=21,0 the browser session may still be active while a next proactive command is issued. Therefore the end of the browser session shall be reported to the ME via browser termination event command asynchronously if determined by the event list.
For details please refer to AT^SSTR.

Syntax

Write Command

```
AT^SSTGI=21
```

Response(s)

```
^SSTGI: <cmdType>, <commandDetails>, <confirmationText>,
<confirmationIconQualifier>, <iconId>, <browserIdentity>, <url>, <bearerList>,
<fileRefList>, <gatewayIdentity>
OK
ERROR
+CME ERROR: <err>
```

PIN	ASC0	ASC1	MUX1	MUX2	MUX3	Last	
-	+	+	+	+	+	-	-

Parameter Description

<cmdType>(num)

21	Proactive command ID, see Remote-SAT Command Types

<commandDetails>(num)

This byte is RFU.

<confirmationText>(str)

String for user confirmation stage

<confirmationIconQualifier>(num)

0...255	Used as bit field
bit 1	0: Icon is self explanatory and replaces text

	1: Icon is not self-explanatory and shall be displayed with the text Determined value only if associated icon ID is not 0 (an icon exists).
bit 2-8	RFU

`<iconId>`(num)

0...255	
0	No Icon

`<browserIdentity>`(num)

0...255	Browser to be used
0	Default Browser shall be used.
1...255	RFU

`<url>`(str)

String containing URL to be used by the TE to request content. The way the ME requests content using the URL is out of the scope of the present document. This is specified in RFC 1738 Annex K for example.

`<bearerList>`(str)

“00“	SMS
“01“	CSD
“02“	USSD
“03“	GPRS
04...FF	RFU

`<fileRefList>`(str)

String containing full path to the provisioning file. The first byte contains the number of files. Every comma separated path is the concatenation of file identifiers starting from the Master File (e.g. 3F007F206FXY). The file contains a single unambiguous set of parameters required to make the connection. The content of the file is expected to be consistent with the format defined for provisioning information for the requested type of browser.

`<gatewayIdentity>`(str)

String containing the Gateway/Proxy Identity which gives to the mobile the name/identity of the Gateway/Proxy to be used for connecting to the URL. This Gateway/Proxy identity is required when the bearer data object is present.

15.15 AT^SSTGI SAT Get Information - Play Tone (32)

This command shall be used after receiving the URC ^SSTN: 32.
The ME has been instructed to generate an audible tone, and may pass to the TE some information to support this.

Syntax

Write Command

`AT^SSTGI=32`

Response(s)

`^SSTGI: <cmdType>, <commandDetails>, <infoText>, <tone>, <durationUnit>, <duration>, <iconQualifier>, <iconId>`
`OK`
`ERROR`
`+CME ERROR: <err>`

PIN	ASC0	ASC1	MUX1	MUX2	MUX3		Last
-	+	+	+	+	+	-	-

Parameter Description

`<cmdType>`(num)

32	Proactive command ID, see `Remote-SAT Command Types`

`<commandDetails>`(num)

This byte is RFU.

`<infoText>`(str)

String to accompany tone

`<tone>`(str)

Tone generated by the ME

01...08	Standard supervisory tones:
“01“	Dial tone
“02“	Called subscriber busy
“03“	Congestion
“04“	Radio path acknowledge
“05“	Radio path not available / Call dropped
“06“	Error / Special information
“07“	Call waiting tone
“08“	Ringing tone
16...18	ME proprietary tones:
“16“	General beep
“17“	Positive acknowledgement tone
“18“	Negative acknowledgement or error tone

<durationUnit>(num)	
0	Minutes
1	Seconds
2	Tenth of Seconds

<duration>(num)	
1...255	Duration of tone, expressed in units

<iconQualifier>(num)	
0...255	Used as bit field
bit 1	0: Icon is self explanatory and replaces text
	1: Icon is not self-explanatory and shall be displayed with the text Determined value only if associated icon ID is not 0 (an icon exists).
bit 2-8	RFU

<iconId>(num)	
0...255	
0	No Icon

15.16 AT^SSTGI SAT Get Information - Display Text (33)

This command shall be used after receiving the URC ^SSTN: 33. The TE gets a message to be displayed to the user. The message can have different display characteristics.

Syntax

Write Command

`AT^SSTGI=33`

Response(s)

`^SSTGI: <cmdType>, <commandDetails>, <text>, <immediateResponse>, <iconQualifier>, <iconId>`
`OK`
`ERROR`
`+CME ERROR: <err>`

PIN	ASC0	ASC1	MUX1	MUX2	MUX3		Last
-	+	+	+	+	+	-	-

Parameter Description

`<cmdType>`(num)

33	Proactive command ID, see Section 15.3, Remote-SAT Command Types and Table 15.6.

`<commandDetails>`(num)

0...255	Used as bit field
bit 1	0: Normal priority (see note).
	1: High priority (see note).
bit 2-7	RFU
bit 8	0: Clear message after a delay.
	1: Wait for user to clear message.

`<text>`(str)

String to be displayed (up to 240 bytes)

`<immediateResponse>`(num)

This parameter indicates whether the ME should sustain the display beyond sending the TERMINAL RESPONSE.

0	Send TERMINAL RESPONSE when text is cleared from screen.
1	Send TERMINAL RESPONSE immediately and continue to display the text until one of the following events occurs: • A subsequent proactive command is received, containing display data. • A short delay notified with `<commandDetails>` has expired. • User intervention.

	• A higher priority event occurs, e.g. a mobile terminated call. No further TERMINAL RESPONSE shall be sent when the ME removes the text from the display, regardless of the cause. If the <immediateResponse> parameter equals "1" the subsequent "^SSTN: 254" URC should not be used to clear the text from the screen - in this case the text should remain on the screen until one of the above events occurs.

<iconQualifier>(num)	
0...255	Used as bit field
bit 1	0: Icon is self explanatory and replaces text. 1: Icon is not self-explanatory and shall be displayed with the text Determined value only if associated icon ID is not 0 (an icon exists).
bit 2-8	RFU

<iconId>(num)	
0...255	
0	No Icon

Notes

- The MMI shall reject normal priority text commands if the screen is currently used for more than its normal standby display, e.g. if the MMI is in sub-menu. If the command is rejected, the MMI sends the TERMINAL RESPONSE message to the SIM (ME currently unable to process command - screen busy).
- High priority text shall be displayed on the screen immediately, except if a priority conflict of the alerting events occurs, e.g. incoming call, see GSM 11.14, Chapter "Proactive SIM commands and procedures, Display Text".

15.17 AT^SSTGI SAT Get Information - Get Inkey (34)

This command shall be used after receiving the URC ^SSTN: 34.
The TE is asked to prompt the user for an input, which is a single character. Help can be requested by the user, if available.

Syntax

Write Command

`AT^SSTGI=34`

Response(s)

`^SSTGI: <cmdType>, <commandDetails>, <text>, <iconQualifier>, <iconId>`
`OK`
`ERROR`
`+CME ERROR: <err>`

PIN	ASC0	ASC1	MUX1	MUX2	MUX3		Last
-	+	+	+	+	+	-	-

Parameter Description

`<cmdType>`(num)

34	Proactive command ID, see `Remote-SAT Command Types`

`<commandDetails>`(num)

0...255	Used as bit field
bit 1	0: Digits only (0 9, *, # and +)
	1: Alphabet set
bit 2	0: SMS default alphabet (GSM character set)
	1: UCS2 alphabet
bit 3	0: Character sets defined by bit 1 and bit 2 are enabled
	1: Character sets defined by bit 1 and bit 2 are disabled and the "Yes/No" response is requested
bit 4-7	RFU
bit 8	0: No help information available
	1: Help information available

`<text>`(str)

String as prompt for text.

`<iconQualifier>`(num)

0...255	Used as bit field
bit 1	0: Icon is self explanatory and replaces text
	1: Icon is not self-explanatory and shall be displayed with the text Determined value only if associated icon ID is not 0 (an icon exists).
bit 2-8	RFU

<iconId>(num)	
0...255	
0	No Icon

15.18 AT^SSTGI SAT Get Information - Get Input (35)

This command shall be used after receiving the URC ^SSTN: 35.
The TE is asked to prompt the user for an input, of a specified length and type, e.g. digits only. Help can be requested by the user, if available.

Syntax

Write Command

`AT^SSTGI=35`

Response(s)

`^SSTGI: <cmdType>, <commandDetails>, <text>, <responseMin>, <responseMax>[, <defaultText>], <iconQualifier>, <iconId>`
`OK`
`ERROR`
`+CME ERROR: <err>`

PIN	ASC0	ASC1	MUX1	MUX2	MUX3		Last
-	+	+	+	+	+	-	-

Parameter Description

`<cmdType>`(num)	
35	Proactive command ID, see `Remote-SAT Command Types`

`<commandDetails>`(num)	
0...255	Used as bit field
bit 1	0: Digits only (0 9, *, # and +)
	1: Alphabet set
bit 2	0: SMS default alphabet (GSM character set)
	1: UCS2 alphabet
bit 3	0: ME may echo user input on the display
	1: User input shall not be revealed in any way (see note)
bit 4	0: User input to be in unpacked format
	1: User input to be in SMS packed format
bit 5-7	RFU
bit 8	0: No help information available
	1: Help information available

`<text>`(str)
String as prompt for text

`<responseMin>`(num)	
0...255	Minimum length of user input.

`<responseMax>`(num)	
0...255	Maximum length of user input.

<defaultText>(str)

String supplied as default response text

<iconQualifier>(num)	
0...255	Used as bit field
bit 1	0: Icon is self explanatory and replaces text
	1: Icon is not self-explanatory and shall be displayed with the text Determined value only if associated icon ID is not 0 (an icon exists).
bit 2-8	RFU

<iconId>(num)	
0...255	
0	No Icon

Note

- Hidden entry mode (see GSM 11.14) is only available when using digit input. In hidden entry mode only characters ('0', '9', '*' and '#') are allowed.

15.19 AT^SSTGI SAT Get Information - Select Item (36)

This command shall be used after receiving the URC ^SSTN: 36.
The TE is supplied with a list of items allowing the user to select one. Help can be requested by the user, if available and the presentation style is specified. In addition to text strings and icon identifiers, a next action indicator informs the user of the likely result of selecting a chosen item.

Syntax

Write Command

`AT^SSTGI=36`

Response(s)

The first line of output from the ME is:
`^SSTGI: <cmdType>, <commandDetails>, <numOfItems>, <titleText>, <defaultItemId>, <itemIconsPresent>, <itemIconsQualifier>, <titleIconQualifier>, <titleIconId>`
One line follows for every item, repeated for `<numOfItems>`:
`^SSTGI: <cmdType>, <itemId>, <itemText>, <nextActionId>, <iconId>`
`OK`
`ERROR`
`+CME ERROR: <err>`

PIN	ASC0	ASC1	MUX1	MUX2	MUX3		Last
-	+	+	+	+	+	-	-

Parameter Description

`<cmdType>`(num)	
36	Proactive command ID, see `Remote-SAT Command Types`

`<commandDetails>`(num)	
0...255	Used as bit field
bit 1	0: Presentation type is not specified
	1: Presentation type is specified in bit 2
bit 2	0: Presentation as a choice of data values, if bit 1 = '1'
	1: Presentation as a choice of navigation options if bit 1 is '1'
bit 3	0: No selection preference
	1: Selection using soft key preferred
bit 4-7	RFU
bit 8	0: No help information available
	1: Help information available

`<numOfItems>`(num)

Number of items in the list

`<titleText>`(str)

String giving menu title

`<defaultItemId>`(num)

ID of default item
The SIM may supply with the list an indication of the default item, e.g. the previously selected item

0	No default item issued by the SIM application
1...255	Id of the default Item

`<itemIconsPresent>`(num)

0	No icons
1	Icons present

`<itemIconsQualifier>`(num)

0...255	Used as bit field
bit 1	0: Icon is self explanatory and replaces text
	1: Icon is not self-explanatory and shall be displayed with the text Determined value only if associated icon ID is not 0 (an icon exists).
bit 2-8	RFU

`<titleIconQualifier>`(num)

0...255	Used as bit field
bit 1	0: Icon is self explanatory and replaces text
	1: Icon is not self-explanatory and shall be displayed with the text Determined value only if associated icon ID is not 0 (an icon exists).
bit 2-8	RFU

`<titleIconId>`(num)

0...255

0	No Icon

`<itemId>`(num)

Item identifier (1 - `<numOfItems>`)

`<itemText>`(str)

String giving menu title

`<nextActionId>`(num)

The next proactive command type to be issued upon execution of the menu item. See `Remote-SAT Command Types`

0	Next Action information available

`<iconId>`(num)

0...255

0	No Icon

15.20 AT^SSTGI SAT Get Information - Set up Menu (37)

This command shall be used after receiving the URC ^SSTN: 37. The response provides the main menu of the SIM Application to the TE. It needs to be stored by the TE so that it can be displayed without invoking a proactive session.

As with every proactive command the TE is expected to acknowledge the ^SSTGI response with AT^SSTR to confirm that the proactive command has been executed.
Terminal Response via AT^SSTR will not provide any user information in case of this proactive command. Refer to AT^SSTR.

AT^SSTGI can be issued during states IDLE, PAC and WAIT for this proactive command without previously receiving a URC ^SSTN:<cmdType>, see AT^SSTGI.

Syntax

Write Command

AT^SSTGI=37

Response(s)

The first line of output from the ME is:
^SSTGI: <cmdType>, <commandDetails>, <numOfItems>, <titleText>, <menuItemIconsPresent>, <menuItemIconsQualifier>, <titleIconQualifier>, <titleIconId>
One line follows for every item, repeated for <numOfItems>:
^SSTGI: <cmdType>, <itemId>, <itemText>, <nextActionId>, <iconId>
OK
ERROR
+CME ERROR: <err>

PIN	ASC0	ASC1	MUX1	MUX2	MUX3		Last
-	+	+	+	+	+	-	-

Parameter Description

<cmdType>(num)

37	Proactive command ID, see Remote-SAT Command Types

<commandDetails>(num)

0...255	Used as bit field
bit 1	0: No selection preference
	1: Selection using soft key preferred
bit 2-7	RFU
bit 8	0: No help information available
	1: Help information available

<numOfItems>(num)

Number of menu items in the list

<titleText>(str)

String displaying menu title

<menuItemIconsPresent>(num)	
0	No icons
1	Icons present

<menuItemIconsQualifier>(num)	
0...255	Used as bit field
bit 1	0: Icon is self explanatory and replaces text
	1: Icon is not self-explanatory and shall be displayed with the text Determined value only if associated icon ID is not 0 (an icon exists).
bit 2-8	RFU

<titleIconQualifier>(num)	
0...255	Used as bit field
bit 1	0: Icon is self explanatory and replaces text
	1: Icon is not self-explanatory and shall be displayed with the text Determined value only if associated icon ID is not 0 (an icon exists).
bit 2-8	RFU

<titleIconId>(num)	
0...255	
0	No Icon

<itemId>(num)

Menu item identifier (1 - <numOfItems>)

<itemText>(str)

Title of menu item

<nextActionId>(num)

The next proactive command type to be issued upon execution of the menu item. See Remote-SAT Command Types

0	No next Action information available

<iconId>(num)	
0...255	
0	No Icon

15.21 AT^SSTGI SAT Get Information - Set up Idle Mode Text (40)

This command shall be used after receiving the URC ^SSTN: 40.
It provides text and optionally an icon to be displayed by the TE when the display is Idle.

Syntax

Write Command

`AT^SSTGI=40`

Response(s)

`^SSTGI: <cmdType>, <commandDetails>, <text>, <iconQualifier>, <iconId>`
`OK`
`ERROR`
`+CME ERROR: <err>`

PIN	ASC0	ASC1	MUX1	MUX2	MUX3		Last
-	+	+	+	+	+	-	-

Parameter Description

<cmdType>(num)

40	Proactive command ID, see Remote-SAT Command Types

<commandDetails>(num)

This byte is RFU.

<text>(str)

Text to be displayed when TE in IDLE mode

<iconQualifier>(num)

0...255	Used as bit field
bit 1	0: Icon is self explanatory and replaces text
	1: Icon is not self-explanatory and shall be displayed with the text Determined value only if associated icon ID is not 0 (an icon exists).
bit 2-8	RFU

<iconId>(num)

0...255	
0	No Icon

Note

- AT^SSTGI can be issued during states IDLE, PAC and WAIT for this proactive command without previously receiving a URC ^SSTN:<cmdType>, see AT^SSTGI.

15.22 AT^SSTGI SAT Get Information - Language Notification (53)

This command shall be used after receiving the URC ^SSTN: 53.
It provides text to inform the TE about the language currently used for any text string within proactive commands or envelope command responses.
The notified language remains valid until the end of the card session or upon executing another LANGUAGE NOTIFICATION command.
If the Toolkit application is not aware of the currently selected language, no specific language or several languages will be used. The SIM may notify non-specific language. All LANGUAGE NOTIFICATION previously made will be cancelled.
Two types of language notification are defined:
• specific, where a two-character language notification is issued in <langText>,
• non-specific, where no language notification is issued, i.e. <langText> is an empty string.
The TE may use the language included in LANGUAGE NOTIFICATION as appropriate. For instance, this could be done to avoid a mix of languages in screen displays combining ME MMI and SIM Toolkit originating text strings.

Syntax

Write Command

AT^SSTGI=53

Response(s)

^SSTGI: <cmdType>, <commandDetails>, <langText>
OK
ERROR
+CME ERROR: <err>

PIN	ASC0	ASC1	MUX1	MUX2	MUX3	🔔	Last
-	+	+	+	+	+	-	-

Parameter Description

<cmdType>(num)

53	Proactive command ID, see Remote-SAT Command Types

<commandDetails>(num)

0...255	Used as bit field
bit 1	0: non-specific language notification
	1: specific language notification
bit 2-8	RFU

<langText>(str)

Language code string provided as a pair of alpha-numeric characters, defined in ISO 639. Each alphanumeric character is coded on one byte using the SMS default 7-bit coded alphabet as defined in 3GPP TS 23.038[17].

Note

- AT^SSTGI can be issued during states IDLE, PAC and WAIT for this proactive command without previously receiving a URC ^SSTN:<cmdType>, see AT^SSTGI.

15.23 AT^SSTR SAT Response

The TE is expected to acknowledge the AT^SSTGI response with AT^SSTR to confirm that the Proactive Command has been executed. AT^SSTR will also provide any user information, e.g. a selected menu item.

Syntax

Test Command

AT^SSTR=?

Response(s)

^SSTR:(list of supported <state>s), (list of supported <cmdType>s)
OK

Read Command

AT^SSTR?

Response(s)

^SSTR: <state>, <cmdType>
OK

Write Command

AT^SSTR=<cmdType>, <status>[, <inputNumber>][, <inputString>]

Response(s)

^SSTR: <cmdType>[, <TerminationQualifier>, <TerminationCauseText>]
OK

PIN	ASC0	ASC1	MUX1	MUX2	MUX3		Last
-	+	+	+	+	+	-	-

Parameter Description

<state>(num)

BGS2-E Remote-SAT interface states

0	RESET
1	OFF
2	IDLE
3	PAC
4	WAIT

<cmdType>(num)

Number related to Proactive Command or event type according to GSM 11.14 [22].

<TerminationQualifier>(num)

0	The proactive command has been successfully finished.
1...255	The proactive command did not perform successfully.

<TerminationCauseText>(str)

This text has to be shown to the user for an appropriate time, e.g. 2 seconds. The text contains inforamtion regarding the termination cause, e.g. in case of a failed dialing process call barring through Call Control by SIM mechanism may be indicated.
In case of <TerminationCauseText> is an empty string and <TerminationQualifier> is not equal to 0, the TA may give an own indication to the user.

`<status>`(num)

Command status return regarding the type of action that has taken place, e.g. action performed by the user. Values are in accordance with GSM 11.14 [22].

`<inputNumber>`(num)

Response number entered by user

`<inputString>`(str)

Response string entered by user

15.24 AT^SSTR SAT Response - Refresh (1)

The TE is expected to acknowledge the AT^SSTGI response with AT^SSTR to confirm that the Proactive Command has been executed.

Syntax

Write Command
AT^SSTR=1, <status>
Response(s)
OK

PIN	ASC0	ASC1	MUX1	MUX2	MUX3		Last
-	+	+	+	+	+	-	-

Parameter Description

<status>(num)	
0...255	
0	Command performed successfully

Note

- The refresh action (SIM data cache update) will be performed in any case, i.e. <status> values other than 0 will be ignored.

15.25 AT^SSTR SAT Response - Set Up Event List (5)

The TE is expected to acknowledge the AT^SSTGI response with AT^SSTR to confirm that the Proactive Command has been executed. The TE acknowledges that the event list has been set up correctly.

Syntax

Write Command
AT^SSTR=5, <status>
Response(s)
OK

PIN	ASC0	ASC1	MUX1	MUX2	MUX3		Last
-	+	+	+	+	+	-	-

Parameter Description

<status>(num)	
0...255	
0	Command performed successfully
32	ME currently unable to process command
48	Command beyond ME's capabilities
132	ME currently unable to process command because screen is busy

15.26 AT^SSTR SAT Response - Set Up Call (16)

The TE is expected to acknowledge the AT^SSTGI response with AT^SSTR to confirm that the Proactive Command has been executed.

Syntax

Write Command

AT^SSTR=16, <status>

Response(s)

^SSTR: 16, <TerminationQualifier>, <TerminationCauseText>
OK

PIN	ASC0	ASC1	MUX1	MUX2	MUX3		Last
-	+	+	+	+	+	-	-

Parameter Description

<status>(num)

0...255

0	Command performed successfully. Indicate that the user has accepted the call request.
4	Command performed successfully, but requested icon could not be displayed.
16	Proactive SIM session terminated by user
20	USSD/SS Transact terminated by user
32	ME currently unable to process command
34	User did not accept the proactive command. Indicate that the user has denied the call request
35	User cleared down call before connection or network release
48	Command beyond ME's capabilities
132	ME currently unable to process command because screen is busy

Note

- After confirmation phase the TE may show a dialling animation on the screen until a mandatory response parameter is issued.
  ^SSTR: <cmdType>, <TerminationQualifier>, <TerminationCauseText>

15.27 AT^SSTR SAT Response - Send SS (17)

The TE is expected to acknowledge the AT^SSTGI response with AT^SSTR to confirm that the Proactive Command has been executed.

Syntax

Write Command

AT^SSTR=17, <status>

Response(s)

^SSTR: 17, <TerminationQualifier>, <TerminationCauseText>
OK

PIN	ASC0	ASC1	MUX1	MUX2	MUX3		Last
-	+	+	+	+	+	-	-

Parameter Description

<status>(num)

0...255

0	Command performed successfully. Indicate that the user has accepted the SS request.
4	Command performed successfully, but requested icon could not be displayed.
20	USSD/SS Transact terminated by user
32	ME currently unable to process command
48	Command beyond ME's capabilities
132	ME currently unable to process command because screen is busy

15.28 AT^SSTR SAT Response - Send USSD (18)

The TE is expected to acknowledge the AT^SSTGI response with AT^SSTR to confirm that the Proactive Command has been executed.

Syntax

Write Command

AT^SSTR=18, <status>

Response(s)

^SSTR: 18, <TerminationQualifier>, <TerminationCauseText>
OK

PIN	ASC0	ASC1	MUX1	MUX2	MUX3		Last
-	+	+	+	+	+	-	-

Parameter Description

<status>(num)

0...255

0	Command performed successfully. Indicate that the user has accepted the USSD request.
4	Command performed successfully, but requested icon could not be displayed.
20	USSD/SS Transact terminated by user
32	ME currently unable to process command
48	Command beyond ME's capabilities
132	ME currently unable to process command because screen is busy

15.29 AT^SSTR SAT Response - Send Short Message (19)

The TE is expected to acknowledge the AT^SSTGI response with AT^SSTR to confirm that the Proactive Command has been executed.

Syntax

Write Command

AT^SSTR=19, <status>

Response(s)

^SSTR: 19, <TerminationQualifier>, <TerminationCauseText>
OK

PIN	ASC0	ASC1	MUX1	MUX2	MUX3		Last
-	+	+	+	+	+	-	-

Parameter Description

<status>(num)

0...255

0	Command performed successfully. Indicate that the user has accepted the Send SMS request.
4	Command performed successfully, but requested icon could not be displayed.
32	ME currently unable to process command
48	Command beyond ME's capabilities
132	ME currently unable to process command because screen is busy

15.30 AT^SSTR SAT Response - Send DTMF (20)

The TE is expected to acknowledge the AT^SSTGI response with AT^SSTR to confirm that the Proactive Command has been executed.

Syntax

Write Command
AT^SSTR=20, <status>
Response(s)
OK

PIN	ASC0	ASC1	MUX1	MUX2	MUX3	🔔	Last
-	+	+	+	+	+	-	-

Parameter Description

<status>(num)	
0...255	
0	Command performed successfully. Indicate that the user has accepted the Send DTMF request.
4	Command performed successfully, but requested icon could not be displayed.
16	Proactive SIM session terminated by user
32	ME currently unable to process command
48	Command beyond ME's capabilities
132	ME currently unable to process command because screen is busy

15.31 AT^SSTR SAT Response - Launch Browser (21)

The TE is expected to acknowledge the AT^SSTGI response with AT^SSTR to confirm that the Proactive Command has been executed.

Syntax

Write Command
AT^SSTR=21, <status>
Response(s)
OK

PIN	ASC0	ASC1	MUX1	MUX2	MUX3	🔔	Last
-	+	+	+	+	+	-	-

Parameter Description

<status>(num)	
0...255	
0	Command performed successfully. Indicate that the user has accepted the Launch Browser request.
4	Command performed successfully, but requested icon could not be displayed.
32	ME currently unable to process command
34	User did not accept the proactive command. Indicate that the user has denied the Launch Browser request
38	Launch Browser generic error with additional information "No specific cause can be given".
48	Command beyond ME's capabilities
132	ME currently unable to process command because screen is busy
138	Launch Browser generic error with additional information "Bearer unavailable".
238	Launch Browser generic error with additional information "Browser unavailable".
239	Launch Browser generic error with additional information "ME unable to read the provisioning data".

15.32 AT^SSTR SAT Response - Play Tone (32)

The TE is expected to acknowledge the AT^SSTGI response with AT^SSTR to confirm that the Proactive Command has been executed.

Syntax

Write Command
AT^SSTR=32, <status>
Response(s)
OK

PIN	ASC0	ASC1	MUX1	MUX2	MUX3		Last
-	+	+	+	+	+	-	-

Parameter Description

<status>(num)	
0...255	
0	Command performed successfully. Indicate that the user has accepted the call request.
4	Command performed successfully, but requested icon could not be displayed.
16	Proactive SIM session terminated by user
32	ME currently unable to process command
48	Command beyond ME's capabilities
132	ME currently unable to process command because screen is busy

Note

- It is possible for the TE to stop playing the tone by sending the AT^SSTR before Tone is finished.

15.33 AT^SSTR SAT Response - Display Text (33)

The TE is expected to acknowledge the AT^SSTGI response with AT^SSTR to confirm that the Proactive Command has been executed.

Syntax

Write Command
AT^SSTR=33, <status>
Response(s)
OK

PIN	ASC0	ASC1	MUX1	MUX2	MUX3		Last
-	+	+	+	+	+	-	-

Parameter Description

<status>(num)	
0...255	
0	Command performed successfully. Indicate that the user has accepted the call request.
4	Command performed successfully, but requested icon could not be displayed.
16	Proactive SIM session terminated by user
17	Backward move in the proactive SIM session requested by the user
18	No response from user
32	ME currently unable to process command
48	Command beyond ME's capabilities
132	ME currently unable to process command because screen is busy

15.34 AT^SSTR SAT Response - Get Inkey (34)

The TE is expected to acknowledge the AT^SSTGI response with AT^SSTR to confirm that the Proactive Command has been executed.

Syntax

Write Command
AT^SSTR=34, <status>, , <inputString>
Response(s)
OK

PIN	ASC0	ASC1	MUX1	MUX2	MUX3		Last
-	+	+	+	+	+	-	-

Parameter Description

<status>(num)

0...255

0	Command performed successfully. Indicate that the user has accepted the call request.
4	Command performed successfully, but requested icon could not be displayed.
16	Proactive SIM session terminated by user
17	Backward move in the proactive SIM session requested by the user
18	No response from user
19	Help information required by the user
32	ME currently unable to process command
48	Command beyond ME's capabilities
132	ME currently unable to process command because screen is busy

<inputString>(str)

User response entered as a string parameter

Notes

- Coding of any input character is related to the selected alphabet:
  - Input of a character in case of GSM character set requests one byte, e.g. "Y".
  - Input of any characters in UCS2 alphabet requests a 4 byte set, e.g. "0059" is coding the same character "Y".
  - If, as a user response, a binary choice (Yes/No) is requested by the SIM application using bit 3 of the <commandDetails> parameter the valid content of the <inputString> is:
    a) GSM alphabet: "Y" or "y" (positive answer) and "N" or "n" (negative answer).
    b) UCS2 alphabet "0079" or "0059" (positive answer) and "006E" or "004E" (negative answer). For more detailed information refer to AT^SSTGI.
  - Coding of an empty string is done as a "\1b" string with every alphabet.

- The <Alphabet> parameter of AT^SSTA determines the alphabet used on the AT command interface, while the value reported by the <commandDetails> bit 2 of the AT^SSTGI=34 command determines the set of characters allowed. If these alphabet settings are different, the following applies:
  Example: If UCS2 alphabet is selected with AT^SSTA and the <commandDetails> bit 2 of the AT^SSTGI=34 command is reported as "SMS default alphabet (GSM character set)" any input has to be done in UCS2 alphabet. However, take care to enter only UCS2 characters for which equivalent characters are defined in the SMS (GSM) default alphabet. In this case, the ME will correctly translate the given UCS2 data into a TERMINAL RESPONSE coded in SMS (GSM) default alphabet. See also Section 1.6.2, UCS2 and GSM character coding and conversion.

15.35 AT^SSTR SAT Response - Get Input (35)

The TE is expected to acknowledge the AT^SSTGI response with AT^SSTR to confirm that the Proactive Command has been executed.

Syntax

Write Command

AT^SSTR=35, <status>, , <inputString>

Response(s)

OK

PIN	ASC0	ASC1	MUX1	MUX2	MUX3		Last
-	+	+	+	+	+	-	-

Parameter Description

<status>(num)

0...255

0	Command performed successfully. Indicate that the user has accepted the call request.
4	Command performed successfully, but requested icon could not be displayed.
16	Proactive SIM session terminated by user
17	Backward move in the proactive SIM session requested by the user
18	No response from user
19	Help information required by the user
32	ME currently unable to process command
48	Command beyond ME's capabilities
132	ME currently unable to process command because screen is busy

<inputString>(str)

User response entered as a string, length depends on the <responseMin> and <responseMax> values returned by the related AT^SSTGI=35 command.

Notes

- Coding of any input character is related to the selected alphabet:
  - Input of a character in case of GSM character set requests one byte, e.g. "Y".
  - Input of any characters in UCS2 alphabet requests a 4 byte set, e.g. "0059" is coding the same character "Y".
  - Coding of an empty string is done as a "\1b" string with every alphabet.
- The <Alphabet> parameter of AT^SSTA determines the alphabet used on the AT command interface, while the value reported by the <commandDetails> bit 2 of the AT^SSTGI=35 command determines the set of characters allowed. If these alphabet settings are different, the following applies:
  Example: If UCS2 alphabet is selected with AT^SSTA and the <commandDetails> bit 2 of the AT^SSTGI=35 command is reported as "SMS default alphabet (GSM character set)" any input has to be done in UCS2 alphabet. However, take care to enter only UCS2 characters for which equivalent characters are defined in the SMS (GSM) default alphabet. In this case, the ME will correctly translate the given UCS2 data into a TERMINAL RESPONSE coded in SMS (GSM) default alphabet. See also Section 1.6.2, UCS2 and GSM character coding and conversion.

15.36 AT^SSTR SAT Response - Select Item (36)

The TE is expected to acknowledge the AT^SSTGI response with AT^SSTR to confirm that the Proactive Command has been executed. The TE sends a response that can indicate the user's intentions, e.g. when the user is requesting help or selecting a menu item.

GSM11.14 states:
"When the ME issues a successful TERMINAL RESPONSE ('0X' result value ...) for a SELECT ITEM command, it shall supply the identifier of the item selected by the user in the Item identifier data object. If the ME issues a TERMINAL RESPONSE with result "Help information required by the user" for a SELECT ITEM command, it shall supply the identifier of the item for which the user is requiring help information. All other types of TERMINAL RESPONSE do not need to include Item identifier. If one is included by the ME, the SIM shall ignore it."

For compatibility reasons <itemId> is optional in case of <status>=19 ("Help information required by the user"). In this case <itemId>=0 is sent to the SIM.

Syntax

Write Command
AT^SSTR=36, <status>, <itemId>
Response(s)
OK

PIN	ASC0	ASC1	MUX1	MUX2	MUX3		Last
-	+	+	+	+	+	-	-

Parameter Description

<status>(num)

0...255	
0	Command performed successfully. Indicate that the user has accepted the call request.
4	Command performed successfully, but requested icon could not be displayed.
16	Proactive SIM session terminated by user
17	Backward move in the proactive SIM session requested by the user
18	No response from user
19	Help information required by the user
32	ME currently unable to process command
48	Command beyond ME's capabilities
132	ME currently unable to process command because screen is busy

<itemId>(num)

Item IDs are supplied by the SIM Application	
1...255	ID of selected item can be issued if a <status> value of 0 is returned

15.37 AT^SSTR SAT Response - Setup Menu (37)

The TE is expected to acknowledge the AT^SSTGI response with AT^SSTR to confirm that the Proactive Command has been executed.

Syntax

Write Command
AT^SSTR=37, <status>
Response(s)
OK

PIN	ASC0	ASC1	MUX1	MUX2	MUX3		Last
-	+	+	+	+	+	-	-

Parameter Description

<status>(num)	
0...255	
0	Command performed successfully. Indicate that the user has accepted the call request.
4	Command performed successfully, but requested icon could not be displayed.
32	ME currently unable to process command
48	Command beyond ME's capabilities
132	ME currently unable to process command because screen is busy

Note

- The response simply conveys, to the SAT, the information that the main menu was received and set up on the user interface. It does not transmit any information about a selected item, like in the case of AT^SSTR.

  Once this command was executed the user can proceed as described in the AT^SSTR SAT Response - Setup Menu (37).

15.38 AT^SSTR SAT Response - Set Up Idle Mode Text (40)

The TE is expected to acknowledge the AT^SSTGI response with AT^SSTR to confirm that the Proactive Command has been executed.

Syntax

Write Command
AT^SSTR=40, <status>
Response(s)
OK

PIN	ASC0	ASC1	MUX1	MUX2	MUX3		Last
-	+	+	+	+	+	-	-

Parameter Description

<status>(num)

0...255

0	Command performed successfully. Indicate that the user has accepted the call request.
4	Command performed successfully, but requested icon could not be displayed.
32	ME currently unable to process command
48	Command beyond ME's capabilities
132	ME currently unable to process command because screen is busy

15.39 AT^SSTR SAT Response - Language Notification (53)

The TE is expected to acknowledge the AT^SSTGI response with AT^SSTR to confirm that the Proactive Command has been executed. The TE indicates whether the Language Notification command was correctly executed.

Syntax

Write Command
AT^SSTR=53, <status>
Response(s)
OK

PIN	ASC0	ASC1	MUX1	MUX2	MUX3		Last
-	+	+	+	+	+	-	-

Parameter Description

<status>(num)	
0...255	
0	Command performed successfully. Indicate that the user has accepted the call request.

15.40 AT^SSTR SAT Event - Menu Selection (211)

The TE specifies the user's selection of an item from the main menu, which was set up using SETUP MENU command. Alternatively help can be requested.

Syntax

Write Command

`AT^SSTR=211, <status>, <itemId>`

Response(s)

`OK`

PIN	ASC0	ASC1	MUX1	MUX2	MUX3		Last
-	+	+	+	+	+	-	-

Parameter Description

`<status>`(num)

0...255

0	Command performed successfully.
19	Help information required by the user, no other value can be returned.

`<itemId>`(num)

ID of selected item

0...255

15.41 AT^SSTR SAT Event - User Activity (232)

Sent by the customer application to indicate that a key has been pressed.

Syntax

Write Command
AT^SSTR=232
Response(s)
OK

PIN	ASC0	ASC1	MUX1	MUX2	MUX3	🔔	Last
-	+	+	+	+	+	-	-

15.42 AT^SSTR SAT Event - Idle Screen Available (233)

Sent by the customer application to indicate that the screen has become idle.

Syntax

Write Command
AT^SSTR=233
Response(s)
OK

PIN	ASC0	ASC1	MUX1	MUX2	MUX3		Last
-	+	+	+	+	+	-	-

15.43 AT^SSTR SAT Event - Language Selection (235)

Sent by the customer application to indicate that the customer application has changed the language.
The last value given via this command is also provided to the SIM as response to the proactive command "Provide Local Information (Language Setting)".

Syntax

Write Command

`AT^SSTR=235, , , <inputString>`

Response(s)

`OK`

PIN	ASC0	ASC1	MUX1	MUX2	MUX3	🔔	Last
-	+	+	+	+	+	-	-

Parameter Description

`<inputString>`(str)

Two character language tag, e.g. "en" for English or "de" for German. Default value is "en".

15.44 AT^SSTR SAT Event - Browser Termination (236)

Sent by the customer application to indicate that the internet browser application has been terminated.

Syntax

Write Command

`AT^SSTR=`236, , , `<TermCause>`

Response(s)

`OK`

PIN	ASC0	ASC1	MUX1	MUX2	MUX3	🔔	Last
-	+	+	+	+	+	-	-

Parameter Description

`<TermCause>`(num)

Browser Termination Cause

0...255

0	User termination
1	Error termination

15.45 AT^SSTR SAT Event - Terminate Command (254)

This command allows the TE to finish an ongoing proactive command. This is done by sending repeatedly a Terminal Response "ME currently unable to process command" to the SIM (see GSM 11.14 [22]), if issued in states PAC or WAIT. No action is performed if the interface is already in IDLE state. However, the command returns "OK".
The reaction to the terminal response depends on the SIM application. The command can be used to return to IDLE state regardless whether a proactive command is ongoing or not.

Syntax

Write Command

`AT^SSTR=`254

Response(s)

`OK`

PIN	ASC0	ASC1	MUX1	MUX2	MUX3		Last
-	+	+	+	+	+	-	-

Note

- This command is allowed in states IDLE, PAC and WAIT and forces a return to IDLE state.

15.46 Examples for Using Remote-SAT

To give you an idea of how to start and use Remote-SAT, you may follow the steps described below:

```
// Start after switch on the module
at
OK

// Switch on verbose error messages
at+cmee=2
OK

// Enter the PIN code (if necessary due to SIM configuration)
at+cpin=1234
OK

// Query the Remote-SAT activation status
at^ssta?
^SSTA: 1,0,1,"6FFFFFFF7F0300DF7F"
OK
// First '1' indicates that the interface is in OFF state, i.e. the Automatic Response (AR) mode is enabled. During this mode all SAT Proactive Commands are handled internally by the ME.

// Tell the module that the TE ; is interested in handling SAT, i.e. switch to Explicit Response (ER) mode.
at^ssta=1,0
OK

// This setting takes effect after next start of the ME only, so switch off first
AT^SMSO
^SMSO: MS OFF
OK
^SHUTDOWN

// Switch on ME again and wait until system start indication (if not in autobaud mode, refer AT+IPR)
^SYSSTART

// Switch on verbose error messages
at+cmee=2
OK

// Enter the PIN code (if necessary due to SIM configuration)
at+cpin=1234
OK

// Receiving the first proactive command (if the mounted SIM carries a SIM Application)
^SSTN:37

// Requesting parameter details
at^sstgi=37

// These are the details:
^SSTGI: 37,0,3,"SAT Special Menu",0,1,1,0
^SSTGI: 37,1,"News",0,0
^SSTGI: 37,2,"EMail",0,0
^SSTGI: 37,3,"Banking",0,0

OK

// To query the status of the proactive command
at^sstr=37,0
```

```
OK

// SAT indicates that the proactive session has ended and enters its main menu (which should then be opened on the screen by an MMI): ^SSTN:254

// Selecting item number 1 of the menu sent before:
at^sstr=211,0,1

OK

// Receiving the next proactive command:
^SSTN:36

// Requesting more information...
at^sstgi=36

// ... and get it:
^SSTGI: 36,0,12,"Rubriken >",0,0,1,1,0
^SSTGI: 36,1,"News >",0,0
^SSTGI: 36,2,"Stock Infos>",0,0
^SSTGI: 36,3,"Aktien D >",0,0
^SSTGI: 36,4,"Aktien INT >",0,0
^SSTGI: 36,5,"Sports >",0,0
^SSTGI: 36,6,"1.BL-Clubs >",0,0
^SSTGI: 36,7,"Unterhaltung>",0,0
^SSTGI: 36,8,"Horoskop >",0,0
^SSTGI: 36,9,"Wetter D >",0,0
^SSTGI: 36,10,"Wetter INT >",0,0
^SSTGI: 36,11,"Wetter spez>",0,0
^SSTGI: 36,63,"Extras >",0,0

OK

// Remember to acknowledge:
at^sstr=36,0,63

OK

// And again: Receiving the next proactive command:
^SSTN:36
// ...
```

Examples

EXAMPLE 1

```
// Switch on verbose error messages
at+cmee=2
OK
```

EXAMPLE 2

```
// Enter the PIN code
at+cpin=1234
OK
```

EXAMPLE 3

```
// Start Remote-SAT
at^ssta=1,0
OK
```

EXAMPLE 4

```
// Proactive command "GET INKEY" is issued by the SIM
^SSTN: 34
```

EXAMPLE 5

```
// Get complete data
at^sstgi=34
^SSTGI: 34,0,"<COLOUR-ICON>",1,2
OK
```

EXAMPLE 6

```
// Use GET RESPONSE command (192) to analyze SIM file EF-IMG (hex. 4F20)
at+crsm=192,20256,0,0,15
+CRSM: 144,0,000000644F20040014F04401020114
OK
```

EXAMPLE 7

```
// Use READ RECORD command (178) to get its content
at+crsm=178,20256,2,4,20
+CRSM: 144,0,010808214F0200000016FFFFFFFFFFFFFFFFFFFF
OK
```

EXAMPLE 8

```
// Use READ BINARY command (176) to get content of image instance data file (e.g. hex 4F02)
at+crsm=176,20226,0,0,22
+CRSM: 144,0,080802030016AAAA800285428142814281528002AAAA
OK

at+crsm=176,20226,0,22,9
+CRSM: 144,0,FF000000FF000000FF
OK
```

EXAMPLE 9

```
// Finalize Proactive Command session
at^sstr=34,0,,"+"
OK
```

EXAMPLE 10

```
// Session end indication, i.e. display SAT main menu
^SSTN: 254
```

16. Phonebook Commands

The AT commands described in this chapter allow the external application to access the phonebooks located in the BGS2-E's memory or on the attached Subscriber Identity Module (SIM).

16.1 Sort Order for Phonebooks

Due to the support of UCS2 for the <text> part of phonebook entries, the sort order for phonebook records follows the algorithm published as Unicode Technical Standard #10, "Unicode Collation Algorithm".
A memory-optimized version of the proposed collation tables "[AllKeys]" from Unicode Technical Standard #10 is used in order to determine collation weights for Code points between 0000 and 06FF, and composed keys are used for Code points from ranges 0700 to 33FF, A000 to D7FF and E000 to FFFD. Code Points not referenced in these tables will be assigned a default collation weight with their unicode value as level 1 weight. Decomposition is not supported.
Phonebook entries whose names contain only characters from the GSM07.07 default alphabet are converted internally into their UCS2 equivalents in order to achieve consistent sorting results.

For the user, this means that:

- Punctuation marks and other non-alphabetical characters from the common latin-based character sets, and from the standard GSM character set, will be sorted before any alphabetical characters. The ordering in which these marks appear as compared to other non-alphabetical characters from the same group is determined by their collation weights and does not reflect their code values in the UCS2 or GSM alphabet tables above. Please refer to www.unicode.org for detail.
- Alphabetical characters from the common latin-based character sets, and from the standard GSM character set, will be sorted according to their underlying base characters, plus the collation weights of their accent signs.
- Only collation levels 1 and 2 are regarded, so sorting is not case-sensitive.

Example: the european letters "Å" (GSM 0EH, UCS2 00C5h), "æ" (GSM 1DH, UCS2 00E6h), "ç" (GSM09h, UCS2 00E7h), "a" (GSM 61H, UCS2 0061h) and "b" (GSM 62H, UCS2 0062h) will be sorted in order "a", "Å", "æ" "b","ç" although their numerical values in GSM and UCS2 suggest a different ordering.

16.2 AT+CPBR Read from Phonebook

AT+CPBR serves to read one or more entries from the phonebook selected with AT command AT+CPBS.

The AT+CPBR test command returns the location range supported by the current phonebook storage, the maximum length of <number> field and the maximum length of <text> field.
Note: Length information may not be available while SIM storage is selected. If storage does not offer format information, the format list contains empty parenthesizes.

The AT+CPBR write command determines the phonebook entry to be displayed with <location1> or a location range from <location1> to <location2>. Hence, if no <location2> is given only the entry at <location1> will be displayed.
If no entries are found at the selected location "OK" will be returned.

Syntax

Test Command

```
AT+CPBR=?
```

Response(s)

```
+CPBR: (1-<maxloc>), <nlength>, <tlength>
OK
ERROR
+CME ERROR: <err>
```

Write Command

```
AT+CPBR=<location1>[, <location2>]
```

Response(s)

```
[+CPBR: <location1>, <number>, <type>, <text>]
[+CPBR: <location2>, <number>, <type>, <text>]
OK
ERROR
+CME ERROR: <err>
```

PIN	ASC0	ASC1	MUX1	MUX2	MUX3		Last
+	+	+	+	+	+	-	-

Reference(s)

GSM 07.07, GSM 11.11

Parameter Description

<location1>(num)

The first (lowest) location number within phonebook memory where to start reading. The maximum range supported by the current phonebook is given in the test command response.
If <location1> exceeds the upper bound <maxloc> (as indicated by the test command), command will respond with "+CME ERROR: invalid index".

<location2>(num)

The last (highest) location number within phonebook memory where to stop reading. The maximum range supported by the current phonebook is given in the test command response.
If both <location1> and <location2> are in the range indicated by the test command parameter <maxloc>, the list of entries will be output and terminated with "OK".
If <location2> exceeds the range indicated by the test command parameter <maxloc>, the list of entries will be output but terminated with "+CME ERROR: invalid index".

<number>(str)

Phone number in format specified by <type>, it may be an empty string.

<type>(num)

Type of address octet, which defines the used type of number (ton) and the numbering plan identification (npi). Please consider that for types other than 129 or 145 dialing from phonebook with ATD><mem><n> is, depending on the network, not always possible (refer to GSM 04.08 subclause 10.5.4.7 for details). See also <type> of AT+CPBW.
Possible values are:

145	Dialing string <number> includes international access code character '+'
161	National number. Network support of this type is optional.
209	Dialing string <number> has been saved as ASCII string and includes non-digit characters other than "*", "#", "+" or "p". Note that phonebook entries saved with this type cannot be dialed.
255	Dialing string <number> is a command to control a Supplementary Service, i.e. "*", "#" codes are contained. Network support of this type is optional.
129	Otherwise

<text>(str)(+CSCS)

Text assigned to a phone number. The maximum length for this parameter is given with test command response parameter <tlength>.
If using an ASCII terminal characters which are coded differently in ASCII and GSM have to be entered via escape sequences as described in Section 1.6, Supported character sets.

<maxloc>(num)

Maximum location number for the currently selected storage. For phonebooks located on the SIM this value depends on the SIM card type.

<nlength>(num)

Maximum length of phone number for "normal" locations. Depending on the storage a limited number of locations with extended memory is available per phonebook. These locations allow storing numbers with twice the standard length, which is 2*<nlength> digits for normal numbers, but only <nlength> digits for numbers saved with <type>=209.

<tlength>(num)

Maximum length of <text> assigned to the telephone number. The value indicated by the test command is given in octets. If <text> is given as GSM characters each character corresponds to one octet. If the <text> string is given in UCS2, the maximum number of characters depends on the coding scheme used for the alpha field of the SIM according to GSM 11.11, Annex B [21]. In the worst case the number of UCS2 characters is at least one less than half the number of GSM characters.

Note

- Users should be aware that when using this AT command quickly after SIM PIN authentication the SIM data may not yet be accessible, resulting in a short delay before the requested AT command response is returned. See Section 21.1, Restricted access to SIM data after SIM PIN authentication for further detail.

Example

`AT+CPBR=?`	First run the AT+CPBR test command to find out the maximum range of entries stored in the active phonebook.
`+CPBR:(1-100),20,17`	BGS2-E returns the supported values, where 100 is the supported range of location numbers, 20 is the length of the phone number and 17 is the maximum length of the associated text.

`AT+CPBR =1,3`
`+CPBR:1,"+999999",145,"Charlie"`
`+CPBR:2,"+777777",145,"Bill"`
`+CPBR:3,"+888888",145,"Arthur"`
	Then use the AT+CPBR write command to display the phonebook entries sorted by location numbers.

16.3 AT+CPBS Select phonebook memory storage

AT+CPBS selects the active phonebook storage, i.e. the phonebook storage that all subsequent phonebook commands will be operating on.
The read command returns the currently selected <storage>, the number of <used> entries and the <total> number of entries available for this storage. The test command returns all supported <storage>s as compound value.

Syntax

Test Command

AT+CPBS=?

Response(s)

+CPBS: (list of supported <storage>s)
OK
ERROR
+CME ERROR: <err>

Read Command

AT+CPBS?

Response(s)

+CPBS: <storage>, <used>, <total>
OK
ERROR
+CME ERROR: <err>

Write Command

AT+CPBS=<storage>

Response(s)

OK
ERROR
+CME ERROR: <err>

PIN	ASC0	ASC1	MUX1	MUX2	MUX3		Last
+	+	+	+	+	+	-	-

Reference(s)

GSM07.07

Parameter Description

<storage>(str)

"FD"	Fixed dialing phonebook Capacity: depending on SIM Location: SIM
"SM"(&F)(P)	SIM phonebook Capacity: depending on SIM Location: SIM
"ON"	MSISDN list Capacity: depending on SIM Location: SIM
"ME"	Mobile Equipment Phonebook Capacity: max. 250 entries Location: ME

“LD“	Last number dialed phonebook. Stores all voice call numbers dialed with ATD, but no data call numbers. Capacity: max. 10 entries Location: depending on SIM this phonebook may reside partly or completely in ME AT+CPBW command is not applicable to this storage. The LD list can be deleted with AT^SDLD or with AT^SPBD.
“MC“	Missed (unanswered received) calls list Capacity: max. 10 entries Location: ME AT+CPBW command is not applicable to this storage. The MC list can be deleted with AT^SPBD.
“RC“	Received calls list Capacity: max. 10 entries Location: ME AT+CPBW command is not applicable to this storage. The RC list can be deleted with AT^SPBD.
“VM“	CPHS voice mailbox phonebook Capacity: 1 or 2 entries, depending on SIM 1 - Line 1 mailbox 2 - Line 2 mailbox Location: SIM

<used>(num)

Value indicating the number of used locations in selected memory storage.

<total>(num)

Value indicating the maximum number of locations allowed in the selected memory storage.

Notes

- Users should be aware that when using this AT command quickly after SIM PIN authentication the SIM data may not yet be accessible, resulting in a short delay before the requested AT command response is returned. See Section 21.1, Restricted access to SIM data after SIM PIN authentication for further detail.
- If the SIM card is changed, all records of the "MC", "RC" and "LD" phonebooks stored on the ME will be deleted automatically. If the same SIM is removed and reinserted, no automatic deletion is performed. Calls made after last switch-on will be cleared from the "MC", "RC" and "LD" phonebook, if the SIM is removed and reinserted during normal operation.
- Missed and received calls which are not presented to the called party are not stored in MC and RC phonebook.

16.4 AT+CPBW Write into Phonebook

The AT+CPBW write command can be used to create, edit and delete a phonebook entry at a <location> of the active storage selected with AT+CPBS.
If <storage>="FD" (SIM fixed dialing numbers) is selected, PIN2 authentication has to be performed prior to any write access.

The AT+CPBW test command returns the location range supported by the current storage, the maximum length of the <number> field, the range of supported <type> values and the maximum length of the <text> field. Note: The length may not be available while SIM storage is selected. If storage does not offer format information, the format list contains empty parenthesizes.

Syntax

Test Command

```
AT+CPBW=?
```

Response(s)

```
+CPBW: (1-<maxloc>), <nlength>, (list of supported <type>s), <tlength>
OK
ERROR
+CME ERROR: <err>
```

Write Command

```
AT+CPBW=[<location>][, <number>[[, <type>][, <text>]]]
```

Response(s)

```
OK
ERROR
+CME ERROR: <err>
```

PIN	ASC0	ASC1	MUX1	MUX2	MUX3		Last
+	+	+	+	+	+	-	-

Reference(s)

GSM 07.07, GSM 04.08

Parameter Description

<location>(num)

Location number within phonebook memory. The maximum range supported by each storage type is indicated in the test command response. If <location> is not given, the first free entry will be used.
If <location> is given as the only parameter, the phonebook entry specified by <location> is deleted.

<number>(str)

Phone number in format specified by <type>. Parameter must be present, although it may be an empty string. Alphabetic characters are not permitted. The <number> may contain dialstring modifiers "*", "#", "+" or "p".
If other printable non-alphabetic characters are used the entry needs to be saved with <type>=209. Otherwise, if <type>=209 is not used any non-digit characters other than "*", "#", "+" or "p" will be removed from the string and only accepted modifiers from the GSM alphabet will be saved.
A <number> saved with <type>=209 requires double memory. In order to fit into a standard location, the number needs to be reduced to a maximum length of <nlength>/2, including all digits and dial string modifiers. Extended locations may be used as stated below for <nlength>.

`<type>`(num)

Type of address octet, which defines the used type of number (ton) and the numbering plan identification (npi). Please consider that for types other than 129 or 145 dialing from phonebook with `ATD><mem><n>` is, depending on the network, not always possible (refer GSM 04.08 subclause 10.5.4.7 for details).
If `<type>` is not specified the unknown `<type>`=129 is used. If `<number>` contains a leading "+" `<type>`=145 (international) is used.
Supported values are:

145	Dialing string `<number>` includes international access code character "+"
161	National number. The network support for this type is optional.
209	Dialing string `<number>` will be saved as ASCII string. This is the default value, if `<type>` is not specified explicitly and characters other than "*", "#", "+" or "p" are included in `<number>`. Note that phonebook entries saved with this type cannot be dialed.
255	Dialing string `<number>` is a command to control a Supplementary Service, i.e. "*", "#" codes are contained. Network support of this type is optional.
129	Unknown number. If `<type>` is unknown and the `<number>` contains a leading "+", then this sign is removed.

`<text>`(str)(+CSCS)

Text assigned to the phone number. The maximum length of this parameter is given in the test command response `<tlength>`. When using an ASCII terminal, characters which are coded differently in ASCII and GSM have to be entered via escape sequences as described in Section 1.6, Supported character sets.

`<maxloc>`(num)

Maximum number of locations supported by the currently selected storage. For phonebooks located on SIM, this value varies depending on the SIM card. See `AT+CPBS` for typical values.

`<nlength>`(num)

Maximum length of phone number for "normal" locations. Depending on the storage, a limited number of locations with extended memory is available per phonebook. These locations allow storing numbers with twice the standard length, which is 2*`<nlength>` digits for normal numbers, but only `<nlength>` digits for numbers saved with parameter `<type>`= 209. If all extended locations of the selected phonebook are used up, then any attempt to write a number which requires extended memory will be denied with "+CME ERROR: invalid dial string".

`<tlength>`(num)

Maximum length of `<text>` assigned to the telephone number. The value indicated by the test command is given in octets. If the `<text>` string is given in GSM characters, each character corresponds to one octet. If the `<text>` string is given in UCS2, the maximum number of characters depends on the coding scheme used for the alpha field of the SIM. In the worst case the number of UCS2 characters is at least one less than half the number of GSM characters.
For a detailed description please refer to GSM 11.11, Annex B [21].

Notes

- Users should be aware that when using this AT command quickly after SIM PIN authentication the SIM data may not yet be accessible, resulting in a short delay before the requested AT command response is returned. See Section 21.1, Restricted access to SIM data after SIM PIN authentication for further detail.
- During `AT+CPBW` write command it is possible that in some cases returns "+CME ERROR: operation temporary not allowed". Use `AT+CPBW` write command again.
- DTMF transmission:
  If a dial string contains the call modifier "p" the digits after this call modifier will be saved as DTMF tones. The DTMF tones 'A','B','C' and 'D' can not be saved due to BCD limitations.

Examples

EXAMPLE 1

Make a new phonebook entry at the first free location

```
AT+CPBW=,"+431234567",145,"international"
```

EXAMPLE 2

Delete entry at location 1

```
AT+CPBW=1
```

EXAMPLE 3

The following examples are provided to illustrate the effect of writing phonebook entries with different types of dial string modifiers in <number>

```
AT+CPBW=5,"12345678",,"Arthur"
AT+CPBW=6,"432!p-765()&54*654#",,"John"
AT+CPBW=7,"432!p-765()&54*654#",129,"Eve"
AT+CPBW=8,"432!p-765()&54*654#",145,"Tom"
AT+CPBW=9,"432!p-765()&54*654#",209,"Richard"
```

EXAMPLE 4

Read phonebook entries from locations 5 - 9 via AT+CPBR

```
+CPBR:5,"12345678",129,"Arthur"
+CPBR:6,"432!p-765()&54*654#",209,"John"
+CPBR:7,"432p76554*654#",129,"Eve"
+CPBR:8,"+432p76554*654#",145,"Tom"
+CPBR:9,"432!p-765()&54*654#",209,"Richard"
```

16.5 AT^SPBC Find first matching entry in sorted phonebook

The AT^SPBC write command searches the current phonebook for the index number of the first (lowest) entry that matches the character specified with <schar>. The AT^SPBC test command returns the list of phonebooks which can be searched through with AT^SPBC.
CAUTION: Please note that AT^SPBC is assigned the same index as AT^SPBG or AT^SPBS which is not identical with the physical location numbers used in the various phonebooks. Therefore, do not use the index numbers retrieved with AT^SPBC to dial out or modify phonebook entries.

Syntax

Test Command

AT^SPBC=?

Response(s)

^SPBC: (list of supported <storage>s)
OK
ERROR
+CME ERROR: <err>

Write Command

AT^SPBC=<schar>

Response(s)

^spbc: <index>
OK
ERROR
+CME ERROR: <err>

PIN	ASC0	ASC1	MUX1	MUX2	MUX3		Last
+	+	+	+	+	+	-	-

Parameter Description

<storage>(str)

Response parameter of AT^SPBC test command.
For a detailed description of storages see AT+CPBS.

“FD“	Fixed dialing phonebook
“SM“	SIM phonebook
“ME“	Mobile Equipment Phonebook

<schar>(str)

First character of the entry to be searched in the sorted list of phonebook entries.

<index>(num)

In the active phonebook, the first (lowest) index number of an entry beginning with <schar>. As stated above, the retrieved index number shall not be used to dial out or edit phonebook entries. If no matching phonebook entry is found, <index>=0 will be returned.

Note

- Users should be aware that when using this AT command quickly after SIM PIN authentication the SIM data may not yet be accessible, resulting in a short delay before the requested AT command response is returned. See Section 21.1, Restricted access to SIM data after SIM PIN authentication for further detail.

16.6 AT^SPBD Purge phonebook memory storage

AT^SPBD can be used to purge the selected phonebook <storage> manually, i.e. all entries stored in the selected phonebook storage will be deleted. CAUTION! The operation cannot be stopped nor reversed!
The AT^SPBD test command returns the list of phonebooks which can be deleted with AT^SPBD.
An automatic purge of the phonebooks is performed when the SIM card is removed and replaced with a different SIM card. This affects the ME based part of the "LD" storage, and storages "MC" and "RC". Storage "ME" is not affected.

Syntax

Test Command

AT^SPBD=?

Response(s)

^SPBD: (list of supported <storage>s)
OK
ERROR
+CME ERROR: <err>

Write Command

AT^SPBD=<storage>

Response(s)

OK
ERROR
+CME ERROR: <err>

PIN	ASC0	ASC1	MUX1	MUX2	MUX3	🔔	Last
+	+	+	+	+	+	-	-

Parameter Description

<storage>(str)

If test command: List of phonebooks which can be deleted by AT^SPBD.
If write command: Phonebook to be deleted.
For a detailed description of storages see AT+CPBS.

“LD“	Last number dialed phonebook
“MC“	Missed (unanswered received) calls list
“RC“	Received calls list

Note

- Users should be aware that when using this AT command quickly after SIM PIN authentication the SIM data may not yet be accessible, resulting in a short delay before the requested AT command response is returned. See Section 21.1, Restricted access to SIM data after SIM PIN authentication for further detail.

16.7 AT^SPBG Display phonebook entries in alphabetical order

AT^SPBG sorts the entries of the current phonebook in alphabetical order by name (the first six characters matter). The sort order is described in Section 16.1, Sort Order for Phonebooks.
There are two ways to use AT^SPBG:

- If the optional parameter <RealLocReq> equals 0 or is omitted the sorted entries will be sequentially numbered. As these numbers are not identical with the location numbers stored in the various phonebooks AT^SPBG can be used for reading only. For example, it helps you find entries starting with matching characters. Do not use the serial numbers to dial out or modify entries.
- If parameter <RealLocReq>=1 is given by the write command, the response parameter <location> additionally appended to each entry indicates the actual location number. This number can be used for editing with AT+CPBW or dialing with ATD><mem><n>. The first index number of each entry is only the serial number of the sorted list.

Before using the AT^SPBG write command it is recommended to query the number of records currently stored in the active phonebook (refer to test command parameter <used>). The test command also includes the parameters <nlength> and <tlength>. Note that if SIM storage is selected the length may not be available. If storage does not offer format information, the format list should be empty parenthesises.

Syntax

Test Command

```
AT^SPBG=?
```

Response(s)

```
^SPBG: (1-<used>), <nlength>, <tlength>
OK
ERROR
+CME ERROR: <err>
```

Write Command

```
AT^SPBG=<index1>[, <index2>][, <RealLocReq>]
```

Response(s)

```
[^SPBG: <index1>, <number>, <type>, <text>[, <location>]]
[^SPBG: <index2>, <number>, <type>, <text>[, <location>]]
OK
ERROR
+CME ERROR: <err>
```

PIN	ASC0	ASC1	MUX1	MUX2	MUX3	Last
+	+	+	+	+	+	-	-

Parameter Description

<index1>(num)

First index number in the sorted list where to start reading. The supported range is given in the test command response.
If <index 1> exceeds the upper bound <used>, "+CME ERROR: invalid index" will be returned.

<index2>(num)

Last index number in the sorted list where to stop reading. The supported range is given in the test command response.
If <index2> is not given via write command, only the entry located at <index1> will be displayed.
If both <index1> and <index2> are in the range indicated by the test command parameter <used>, the list of entries will be output and terminated with OK.
If <index2> exceeds the range indicated by the test command parameter <used>, the list of entries will be output but terminated with a "+CME ERROR: invalid index".

`<RealLocReq>`(num)

Is a display of the "real" `<location>` of the entry required?

[0]	Do not show an entry's "real" location number. Parameter `<location>` will not be displayed.
1	Show the "real" location number as parameter `<location>` at the end of each entry.

`<number>`(str)

String type phone number in format specified by `<type>`.
The number parameter may be an empty string.

`<type>`(num)

Type of address octet, which defines the used type of number (ton) and the numbering plan identification (npi). Please consider that for types other than 129 or 145 dialing from phonebook with `ATD><mem><n>` is, depending on the network, not always possible (refer to GSM 04.08 subclause 10.5.4.7 for details). See also `<type>` of `AT+CPBW`.
Possible values are:

145	Dialing string `<number>` includes international access code character '+'
161	National number. Network support of this type is optional.
209	Dialing string `<number>` has been saved as ASCII string and includes non-digit characters other than "*", "#", "+" or "p". Note that phonebook entries saved with this type cannot be dialed.
255	Dialing string `<number>` is a command to control a Supplementary Service, i.e. "*", "#" codes are contained. Network support of this type is optional.
129	Otherwise

`<text>`(str)(+CSCS)

Text assigned to the phone number. The maximum length for this parameter is given in test command response `<tlength>`.

`<used>`(num)

Value indicating the number of used locations in selected memory storage.

`<location>`(num)

The location within phonebook memory at which the corresponding entry is located.
This location may be used for other commands (e.g. `AT+CPBR` or `ATD><mem><n>`)

`<nlength>`(num)

Maximum length of phone number for "normal" locations. Depending on the storage, a limited number of locations with extended memory is available per phonebook. Please refer to AT command `AT+CPBW` for detail.

`<tlength>`(num)

Maximum length of `<text>` assigned to the telephone number. The value indicated by the test command is given in octets. If the `<text>` string is given in GSM characters, each character corresponds to one octet. If the `<text>` string is given in UCS2, the maximum number of characters depends on the coding scheme used for the alpha field of the SIM according to GSM 11.11, Annex B [21]. In the worst case the number of UCS2 characters is at least one less than half the number of GSM characters.

Notes

- The command can be used for the phonebooks "SM", "FD", "ME" (cf. AT+CPBS).
- Users should be aware that when using this AT command quickly after SIM PIN authentication the SIM data may not yet be accessible, resulting in a short delay before the requested AT command response is returned. See Section 21.1, Restricted access to SIM data after SIM PIN authentication for further detail.

Examples

EXAMPLE 1

Using AT^SPBG without <RealLocReq>:

AT^SPBG=?	First run the AT^SPBG test command to find out the range of entries stored in the current phonebook.
^SPBG: (1-33),20,17	TA returns the range, where 33 is the number of entries stored in the current phonebook.
AT^SPBG=1,33 ^SPBG:1,"+999999",145,"Arthur" ^SPBG:2,"+777777",145,"Bill" ^SPBG:3,"+888888",145,"Charlie"	Now, enter the write command. To obtain best results it is recommended to query the full range of entries. TA returns phonebook entries in alphabetical order.

The numbers at the beginning of each line are not the memory locations in the phonebook, but only serial numbers assigned to the entries' positions in the alphabetical list.

EXAMPLE 2

Using AT^SPBG with <RealLocReq>:

AT^SPBG=?	First run the AT^SPBG test command to find out the range of entries stored in the current phonebook.
^SPBG: (1-33),20,17	TA returns the range, where 33 is the number of entries stored in the current phonebook.
AT^SPBG=1,33,1 ^SPBG:1,"+999999",145,"Arthur",27 ^SPBG:2,"+777777",145,"Bill",6 ^SPBG:3,"+888888",145,"Charlie",15	Now, enter the write command including parameter <RealLocReq>=1 to get the actual location numbers.

The numbers at the end of each line are the memory locations in the phonebook and can be used for dialing or editing phonebook entries:

AT+CPBR=27 +CPBR: 27,"+999999",145,"Arthur"	Read out phonebook location 27. This entry can be edited with AT+CPBW or used for dialing with ATD><mem><n>.

16.8 AT^SPBS Step through the selected phonebook alphabetically

AT^SPBS can be used to scroll sequentially through the active phonebook records in alphabetical order by name. Three entries will be displayed at a time.

Every time the write command is executed, 3 rows of phonebook records are returned. Each triplet overlaps with the next one. The actual index depends on parameter <value>. This parameter determines whether the index will be increased or decreased.
If the index in one output line reaches the last index in the alphabetical list, the next output line will display the first list entry.
After the last record of the phonebook has been reached (see parameter <used> for AT^SPBG), the <internal-counter> switches over to the first.
There are two ways to use AT^SPBS:

- If the optional parameter <RealLocReq> is omitted or (0) the sorted entries will be sequentially numbered. As these numbers are not identical with the location numbers stored in the various phonebooks AT^SPBS can be used for reading only. For example, it helps you find entries starting with matching characters. Do not use the serial numbers to dial out or modify entries.
- If parameter <RealLocReq>=1 is given by the write command, the response parameter <location> additionally appended to each entry indicates the actual location number. This number can be used for editing with AT+CPBW or dialing with ATD><mem><n>. The first index number of each entry is only the serial number of the sorted list.

See examples below.

Syntax

Test Command

```
AT^SPBS=?
```

Response(s)

```
^SPBS: (list of supported <value>)
OK
```

Write Command

```
AT^SPBS=<value>[, <RealLocReq>]
```

Response(s)

```
^SPBS: <index-a>, <number>, <type>, <text>[, <location>]
^SPBS: <index-b>, <number>, <type>, <text>[, <location>]
^SPBS: <index-c>, <number>, <type>, <text>[, <location>]
OK
ERROR
+CME ERROR: <err>
```

PIN	ASC0	ASC1	MUX1	MUX2	MUX3		Last
+	+	+	+	+	+	-	-

Parameter Description

<value>(num)	
1	To make a step forward in the alphabetically sorted phonebook.
2	To make a step backward in the alphabetically sorted phonebook.

<index-a>(num)	
1...maxindex	The index in the sorted list of phonebook entries that identifies the first entry displayed. The value of <index-a> is determined by the value of the <internal-counter> and by parameter <value>.

After a write command has terminated successfully with "OK", the value from parameter <index-a> is saved and retained as the new <internal-counter> value.
Mind after the last record of phonebook, the first entry follows.

<index-b>(num)

1...maxindex — The index in the sorted list of phonebook entries that identifies the second entry displayed.
<index-b>= (<index-a>+1).
Mind after the last record of phonebook, the first entry follows.

<index-c>(num)

1...maxindex — The index in the sorted list of phonebook entries that identifies the third entry displayed.
<index-c>= (<index-b>+1).
Mind after the last record of phonebook, the first entry follows.

<number>(str)

String type phone number in format specified by <type>.
the number parameter may be an empty string.

<type>(num)

Type of address octet, which defines the used type of number (ton) and the numbering plan identification (npi). Please consider that for types other than 129 or 145 dialing from phonebook with ATD><mem><n> is, depending on the network, not always possible (refer to GSM 04.08 subclause 10.5.4.7 for details). See also <type> of AT+CPBW.
Possible values are:

145	Dialing string <number> includes international access code character '+'
161	National number. Network support of this type is optional.
209	Dialing string <number> has been saved as ASCII string and includes non-digit characters other than "*", "#", "+" or "p". Note that phonebook entries saved with this type cannot be dialed.
255	Dialing string <number> is a command to control a Supplementary Service, i.e. "*", "#" codes are contained. Network support of this type is optional.
129	Otherwise

<text>(str)(+CSCS)

Text assigned to the phone number.

<RealLocReq>(num)

Is a display of the "real" <location> of the entry required?

[0]	Do not show an entry's "real" location number. Parameter <location> will not be displayed
1	Show the "real" location number as parameter <location> at the end of the entry

<location>(num)

The location within phonebook memory at which the corresponding entry is located.
This location may be used for other phonebook commands (e.g. AT+CPBR, AT+CPBW, ATD><mem><n>).

<internal-counter>(num)	
0(&F)...maxindex	This parameter is only an internal parameter and cannot modified directly. The internal counter will be reset to index 0 after a call to ATZ or AT&F.

Notes

- The complete list of sorted entries can be retrieved using AT command AT^SPBG.
- The command can be used for the phonebooks "SM", "FD", "ME" (cf. AT+CPBS).
- Users should be aware that when using this AT command quickly after SIM PIN authentication the SIM data may not yet be accessible, resulting in a short delay before the requested AT command response is returned. See Section 21.1, Restricted access to SIM data after SIM PIN authentication for further detail.

Examples

EXAMPLE 1

This example illustrates how to search down and up again using AT^SPBS=1 and 2:

```
at&f                                    First, AT&F is issued to make sure that AT^SPBS=1
OK                                      starts from the first character in alphabetical order.
at^spbs=1
^SPBS:1,"+999999",145,"Arthur"
^SPBS:2,"+777777",145,"Bill"
^SPBS:3,"+888888",145,"Charlie"

OK
at^spbs=1
^SPBS:2,"+777777",145,"Bill"
^SPBS:3,"+888888",145,"Charlie"
^SPBS:4,"0304444444",129,"Esther"

OK
at^spbs=1
^SPBS:3,"+888888",145,"Charlie"
^SPBS:4,"0304444444",129,"Esther"
^SPBS:5,"03033333333",129,"Harry"

OK
at^spbs=2
^SPBS:2,"+777777",145,"Bill"
^SPBS:3,"+888888",145,"Charlie"
^SPBS:4,"0304444444",129,"Esther"

OK
```

EXAMPLE 2

This example shows that when the last index in the sorted list has been reached, the internal counter overflows to the first index.

```
at&f                                    Reset internal counter to 0.
OK
at^spbs=2                               Step down one entry starting from (internal counter)=0 - overflow occurs.
^SPBS:33,"+49301234567",145,"TomTailor"
^SPBS:1,"+999999",145,"Arthur"
^SPBS:2,"+777777",145,"Bill"

OK
```

EXAMPLE 3

Using AT^SPBS with <RealLocReq>=1 in order to obtain the entries' location numbers:

```
at^spbs=1,1

^SPBS:1,"+999999",145,"Arthur",27
^SPBS:2,"+777777",145,"Bill",6
^SPBS:3,"+888888",145,"Charlie",15
```

The numbers at the end of each line are the memory locations in the phonebook and can be used for dialing or editing phonebook entries:

`at+cpbr=27` `+CPBR: 27,"+999999",145,"Arthur"`	Read out phonebook location 27. This entry can be edited with AT+CPBW or used for dialing with ATD><mem><n>.

16.9 AT+CNUM Read own numbers

AT+CNUM returns the subscribers own number(s) from the SIM.

Syntax

Test Command
AT+CNUM=?
Response(s)
OK

Exec Command
AT+CNUM
Response(s)
[+CNUM: [<alpha>], <number>, <type>] [+CNUM: ...] OK ERROR +CME ERROR: <err>

PIN	ASC0	ASC1	MUX1	MUX2	MUX3		Last
+	+	+	+	+	+	-	-

Reference(s): GSM 07.07

Parameter Description

<alpha>(str)

Optional alphanumeric string associated with <number>.

<number>(str)

Phone number in format specified by <type>.

<type>(str)

Type of address octet, see also: AT+CPBR <type>.

Note

- Users should be aware that when using this AT command quickly after SIM PIN authentication the SIM data may not yet be accessible, resulting in a short delay before the requested AT command response is returned. See Section 21.1, Restricted access to SIM data after SIM PIN authentication for further detail.

16.10 AT^SDLD Delete the 'last number redial' memory

AT^SDLD deletes all numbers stored in the "LD" memory.

Syntax

Test Command
AT^SDLD=?
Response(s)
OK

Exec Command
AT^SDLD
Response(s)
OK ERROR +CME ERROR: <err>

PIN	ASC0	ASC1	MUX1	MUX2	MUX3		Last
+	+	+	+	+	+	-	-

Note

- Users should be aware that when using this AT command quickly after SIM PIN authentication the SIM data may not yet be accessible, resulting in a short delay before the requested AT command response is returned. See Section 21.1, Restricted access to SIM data after SIM PIN authentication for further detail.

17. Audio Commands

The AT Commands described in this chapter are related to the BGS2-E's audio interface.

17.1 Audio programming model

The following figure illustrates how the signal path can be adjusted with the parameters <inCalibrate>, <inBbcGain>, <outBbcGain>, <outCalibrate> and <sideTone>.

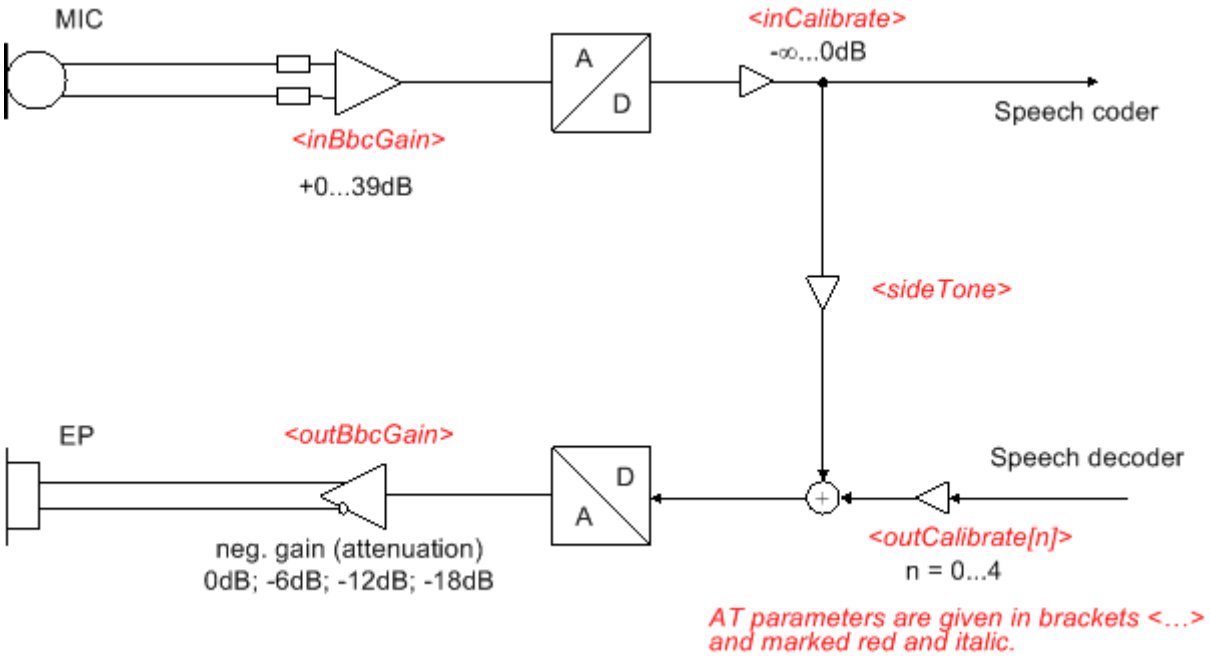

Figure 17.1: Audio programming model for BGS2-E Module

17.2 ATL Set monitor speaker loudness

ATL is implemented for V.250ter compatibility reasons only, and has no effect. In multiplex mode (refer AT+CMUX) the command is supported on logical channel 1 only.

Syntax

Exec Command

ATL[<val>]

Response(s)

OK
ERROR
+CME ERROR: <err>

PIN	ASC0	ASC1	MUX1	MUX2	MUX3		Last
-	+	-	+	-	-	-	-

Reference(s)

V.250

Parameter Description

<val>(num)

17.3 ATM Set monitor speaker mode

ATM is implemented for V.250ter compatibility reasons only, and has no effect. In multiplex mode (refer AT+CMUX) the command is supported on logical channel 1 only.

Syntax

Exec Command

ATM[<val>]

Response(s)

OK
ERROR
+CME ERROR: <err>

PIN	ASC0	ASC1	MUX1	MUX2	MUX3		Last
-	+	-	+	-	-	-	-

Reference(s)

V.250

Parameter Description

<val>(num)

17.4 AT+CLVL Loudspeaker volume level

Syntax

Test Command

AT+CLVL=?

Response(s)

+CLVL: (list of supported<level>s)
OK

Read Command

AT+CLVL?

Response(s)

+CLVL: <level>
OK
ERROR
+CME ERROR: <err>

Write Command

AT+CLVL=<level>

Response(s)

OK
ERROR
+CME ERROR: <err>

PIN	ASC0	ASC1	MUX1	MUX2	MUX3	Last
-	+	+	+	+	+	-	-

Reference(s)

GSM 07.07

Parameter Description

<level>(num)

Loudspeaker Volume Level

0...4(D)

Notes

- The write command can only be used in audio mode 2 - 6.
- The values of the volume steps are specified with the parameters <outCalibrate>[0],...<outCalibrate>[4] of the AT^SNFO command.
- As an alternative to AT+CLVL, you can use AT^SNFO and AT^SNFV. The parameter <level> is identical with <outStep> used by both commands.
- Any change to <level> (or <outStep>) takes effect in audio modes 2 to 6. That is, when you change <level> (or <outStep>) and then select another mode with AT^SNFS, the same step will be applied. The only exception is audio mode 1 which is fixed to <level>=4 (or accordingly <outStep>=4).
- <level> (or <outStep>) is stored non-volatile when the ME is powered down with AT^SMSO or reset with AT+CFUN=1,1.

17.5 AT+CMUT Mute control

The AT+CMUT command mutes the microphone input. The command can be used in all audio modes (1 to 6), during a voice call only. See AT^SNFS for more details on the various audio modes. As alternative, you can use the AT^SNFM command.
During an active call, users should be aware that when they switch back and forth between different audio modes (for example handsfree on/off) the value of <mute> does not change, i.e. the microphone mode is retained until explicitly changed.

Syntax

Test Command

```
AT+CMUT=?
```

Response(s)

```
+CMUT: (list of supported<mute>s)
OK
```

Read Command

```
AT+CMUT?
```

Response(s)

```
+CMUT: <mute>
OK
ERROR
+CME ERROR: <err>
```

Write Command

```
AT+CMUT=<mute>
```

Response(s)

```
OK
ERROR
+CME ERROR: <err>
```

PIN	ASC0	ASC1	MUX1	MUX2	MUX3	Last
-	+	+	+	+	+	-	-

Reference(s)

GSM 07.07

Parameter Description

<mute>(num)

0(P)	Mute off
1	Mute on

17.6 AT+VTD Tone duration

This command refers to an integer <duration> that defines the length of tones transmitted with the AT+VTS command.

Syntax

Test Command

AT+VTD=?

Response(s)

+VTD: (list of supported<duration>s)
OK

Read Command

AT+VTD?

Response(s)

<duration>
OK
ERROR
+CME ERROR: <err>

Write Command

AT+VTD=<duration>

Response(s)

OK
ERROR
+CME ERROR: <err>

PIN	ASC0	ASC1	MUX1	MUX2	MUX3		Last
-	+	+	+	+	+	-	-

Reference(s)

GSM 07.07

Parameter Description

<duration>(num)

Duration of the DTMF signal in 1/10 seconds with tolerance.
The minimum duration of DTMF signals is 300ms. DTMF tones below 300ms cannot be generated.

1(&F)(P)...255

17.7 AT+VTS DTMF and tone generation

AT+VTS is intended to send ASCII characters or strings which cause the Mobile Switching Center (MSC) to transmit DTMF tones to a remote subscriber. The command can be used in alert state and during active voice calls and offers the following variants:

- AT+VTS=<dtmfString> allows to send a sequence of DTMF tones with a duration defined with AT+VTD.
- AT+VTS=<dtmf>[,<duration>] allows to send a single DTMF tone. In this case, the duration can be individually determined during the call.

Syntax

Test Command

AT+VTS=?

Response(s)

+VTS: (list of supported<dtmf>s), (list of supported<duration>s)
OK

Write Command

AT+VTS=<dtmfString>

Response(s)

OK
ERROR
+CME ERROR: <err>

Write Command

AT+VTS=<dtmf>[, <duration>]

Response(s)

OK
ERROR
+CME ERROR: <err>

PIN	ASC0	ASC1	MUX1	MUX2	MUX3	Last	
-	+	+	+	+	+	-	-

Reference(s)

GSM 07.07

Parameter Description

<dtmfString>(str)

String of ASCII characters in the set 0-9,#,*,A, B, C, D. Maximal length of the string is 29. The string must be enclosed in quotation marks ("...").

<dtmf>(str)

ASCII character in the set 0...9,#,*, A, B, C, D.

<duration>(num)

Tone duration in 1/10 seconds with tolerance. If not specified current setting of AT+VTD is used.
The minimum duration of DTMF signals is 300ms. DTMF tones below 300ms cannot be generated.

1...255

Note

- When using DTMF during active voice calls use AT^SM20 and set <CallMode> to 0.

17.8 AT^SNFA Set or query of microphone attenuation

AT^SNFA specifies the large-scale attenuation on the microphone path of the audio device currently selected with AT^SNFS. The write command is only available in audio modes 2 to 6.

Syntax

Test Command

```
AT^SNFA=?
```

Response(s)

```
^SNFA: (list of supported <atten>s)
OK
```

Read Command

```
AT^SNFA?
```

Response(s)

```
^SNFA: <atten>
OK
ERROR
+CME ERROR: <err>
```

Write Command

```
AT^SNFA=<atten>
```

Response(s)

```
OK
ERROR
+CME ERROR: <err>
```

PIN	ASC0	ASC1	MUX1	MUX2	MUX3		Last
-	+	+	+	+	+	-	-

Parameter Description

<atten>(num)(^SNFW)

Multiplication factor for input samples. Parameter <atten> is identical with <inCalibrate> of AT^SNFI.
Formula used to calculate microphone attenuation (negative gain):
Gain in dB = 20 * log(<atten>/32768)

0...32767(P)...65535

0	Microphone is muted. Please note that AT^SNFA cannot be used to mute the microphone. Therefore, any attempt to enter 0 will be rejected with error response. Value 0 is returned only by the read command AT^SNFA? after the microphone was muted with AT^SNFM=0 during an active call.
32767	No attenuation on the microphone path Values greater than 32767 will be suppressed to 32767.

Notes

- This command is provided for compatibility with former products (e.g. M20) and is a subset of AT^SNFI. The parameter <inCalibrate> of AT^SNFI is identical with <atten> of AT^SNFA.
- To make the changes persistent use AT^SNFW.

Example

```
^SYSSTART
at^snfa=?
^SNFA: (0-65535)
OK
at^snfa?
^SNFA: 32767
OK
at^snfs=4
OK
at^snfa=1
OK
at^snfa?
^SNFA: 1
OK
at^snfi?
^SNFI: 5,1
OK
at^snfi=5,45
OK
at^snfa?
^SNFA: 45
OK
```

17.9 AT^SNFD Set audio parameters to manufacturer default values

AT^SNFD sets the active audio parameters to manufacturer defined default values. These default values can be changed and stored by the user and also by download with a new set of parameters.
The restored values are:
AT^SNFA: <atten>
AT^SNFI: <inBbcGain>, <inCalibrate>
AT^SNFO: <outBbcGain>, <outCalibrate>[0 to 4], <sideTone>
AT^SNFS: <audMode>

Syntax

Test Command

```
AT^SNFD=?
```

Response(s)

```
OK
```

Exec Command

```
AT^SNFD
```

Response(s)

```
OK
ERROR
+CME ERROR: <err>
```

PIN	ASC0	ASC1	MUX1	MUX2	MUX3		Last
-	+	+	+	+	+	-	-

Note

- Remember that the factory set audio mode 1 is fixed to <outStep>=4. Consequently, AT^SNFD restores <audMode> together with <outStep>=4, but does not affect the values of <outStep> currently selected in audio modes 2 - 6. This means, if <audMode>=1, the read commands AT^SNFO, AT^SNFV and AT+CLVL will always deliver <outStep>=4. In all other modes the <outStep> value is retained until explicitly changed.

17.10 AT^SNFG Generate Tone

The AT^SNFG write command generates a 'local tone' via the selected audio output device.
Beside the duration up to 3 combinations of frequency and amplitude can be used to compose a local tone.

Syntax

Test Command

AT^SNFG=?

Response(s)

^SNFG: (list of supported <duration>s), (list of supported <frequency>s), (list of supported <amplitude>s)[, ...]
OK

Write Command

AT^SNFG=<duration>[, <frequency>, <amplitude>[, <frequency>, <amplitude>[, <frequency>, <amplitude>]]]

Response(s)

OK
ERROR
+CME ERROR: <err>

PIN	ASC0	ASC1	MUX1	MUX2	MUX3		Last
-	+	+	+	+	+	-	-

Parameter Description

<duration>(num)

in Milliseconds.

0...65535

0	Mutes the currently played tone immediately.
65535	Activates a tone with infinite duration.

<frequency>(num)

in Hertz

200...3400

to be input in 1 Hz steps. Audible bandwidth is limited due to the voice band filters.

<amplitude>(num)

of the tone generator belonging to a frequency.

0...100

The output level at the speaker is dependent of the <outBbcGain> value (see AT^SNFO).
If more than one tone should be played, each amplitude level will be divided by the number of running tones to avoid overdriving of the internal amplifier. For example, if three tones with amplitude of 30 units should be generated each amplitude is reduced to 10. Setting of amplitude to 100 corresponds with using of current <outBbcGain> value (see AT^SNFO), 0 is mute.

Notes

- Response of the command is always "OK" as long as the input parameters are valid.
- If more than one pair of <frequency> and <amplitude> is used then the amplitude for each frequency is devided by the number of pairs.
- Tone priorities
  Ring tones (incoming call/short message), Supervisory tones, Call Progress tones, RTC tones and DTMF tones always have higher priority than a local tone. This means a local tone will be played only if no module tone with a higher priority is being played. A local tone will be stopped and ended when a tone or melody from the module starts to play.
- To suspend a local tone from playing use "AT^SNFG=0".
- Switching the tone generator on and off will trigger AT+CIND indicator "sounder" depending on current AT+CMER settings.
- If there is a voice call active then the local tone is mixed into the voice signal. In case of a multi party call the local tones are not available.

17.11 AT^SNFI Set microphone path parameters

AT^SNFI controls the microphone path amplification. Read and write options of this command refer to the active audio mode. The write command works only in audio modes 2 to 6.

Syntax

Test Command

```
AT^SNFI=?
```

Response(s)

```
^SNFI: (list of supported <inBbcGain>s) , (list of supported <inCalibrate>s)
OK
```

Read Command

```
AT^SNFI?
```

Response(s)

```
^SNFI: <inBbcGain>, <inCalibrate>
OK
ERROR
+CME ERROR: <err>
```

Write Command

```
AT^SNFI=<inBbcGain>, <inCalibrate>
```

Response(s)

```
OK
ERROR
+CME ERROR: <err>
```

PIN	ASC0	ASC1	MUX1	MUX2	MUX3		Last
-	+	+	+	+	+	-	-

Parameter Description

<inBbcGain>(num)(^SNFW)

ADC gain adjustable in seven 6 dB steps and one 3 dB step from 0 dB to 39 dB (0=0dB ... 6=36dB, 7=39dB).

0...7

<inCalibrate>(num)(^SNFW)

Multiplication factor for input samples. Formula to calculate the negative gain (attenuation) of the input signal: Gain in dB = 20 * log (inCalibrate / 32768)

0...32767

Notes

- The range of <inCalibrate> is up to 65535 but will be suppressed to 32767. Values above <inCalibrate>= 65535 will cause a failure.
- The parameter <inCalibrate> of AT^SNFI is identical with <atten> of AT^SNFA.
- For use after restart, changed values can be stored with AT^SNFW.
- Attention! When you adjust audio parameters avoid exceeding the maximum allowed level. Bear in mind that exposure to excessive levels of noise can cause physical damage to users!

17.12 AT^SNFM Set microphone audio path and power supply

The AT^SNFM read command returns the microphone mute and supply voltage status.
The AT^SNFM write command can be used to switch the microphone's audio path (muted / not muted) or to control the power supply of the VMIC line for the microphone input of the analog audio interface.
The microphone can be muted or activated by changing <MicSwitch> in all audio modes (1 to 6), during a voice call only. As an alternative, you can use the AT+CMUT command to mute the microphone.

Syntax

Test Command

```
AT^SNFM=?
```

Response(s)

```
^SNFM: (list of supported <MicSwitch>s) , (list of supported <MicVccCtl>s)
OK
```

Read Command

```
AT^SNFM?
```

Response(s)

```
^SNFM: <MicSwitch>, <MicVccState>
OK
ERROR
+CME ERROR: <err>
```

Write Command

```
AT^SNFM=[<MicSwitch>][, <MicVccCtl>]
```

Response(s)

```
OK
ERROR
+CME ERROR: <err>
```

PIN	ASC0	ASC1	MUX1	MUX2	MUX3		Last
-	+	+	+	+	+	-	-

Parameter Description

<MicSwitch>(num)

Microphone mute control parameter.
Evaluated only during voice calls and if <MicVccCtl> is omitted, e.g. AT^SNFM=1.
Command does not depend on audio mode.

0	Mutes the microphone.
1(P)	Activates the microphone.

<MicVccCtl>(num)

Microphone supply voltage control parameter.
CME error is given if <MicSwitch> is not omitted. Enter for example AT^SNFM=,1 or AT^SNFM=,2.

0	Supply voltage is always switched off.
1	Supply voltage is always switched on.
2(P)	Supply voltage state during voice calls is controlled by the ME. The current value is determined by the parameter data set of the selected audio mode.

<MicVccState>(num)	
Microphone supply voltage control status.	
0	Supply voltage was set to a constant value.
2	Supply voltage state is controlled by the ME and depends on the parameter data set of the selected audio mode.

Notes

- The programmable power supply of the VMIC line gives you greater flexibility in connecting audio accessories. A detailed description can be found in [8].
- The change of the microphone supply voltage control parameter <MicVccCtl> takes no affect when the call is active. After having established a new call it takes affect.
- During an active call, users should be aware that when they switch back and forth between different audio modes (for example handsfree on/off) the value of <MicSwitch> does not change, i.e. the microphone mode is retained until explicitly changed.

17.13 AT^SNFO Set audio output (= loudspeaker path) parameter

AT^SNFO controls the earpiece path amplification. The read and write commands refer to the active audio mode. The write command works only in audio modes 2 to 6.

Syntax

Test Command

AT^SNFO=?

Response(s)

^SNFO: (list of supported <outBbcGain>s), <outCalibrate>[0] , <outCalibrate>[1] , <outCalibrate>[2] , <outCalibrate>[3] , <outCalibrate>[4] , (list of supported <outStep>s), (list of supported <sideTone>s)
OK

Read Command

AT^SNFO?

Response(s)

^SNFO: <outBbcGain>, <outCalibrate>[0] , <outCalibrate>[1] , <outCalibrate>[2] , <outCalibrate>[3] , <outCalibrate>[4] , <outStep>, <sideTone>
OK
ERROR
+CME ERROR: <err>

Write Command

AT^SNFO=<outBbcGain>, <outCalibrate>[0] , <outCalibrate>[1] , <outCalibrate>[2] , <outCalibrate>[3] , <outCalibrate>[4] , <outStep>, <sideTone>

Response(s)

OK
ERROR
+CME ERROR: <err>

PIN	ASC0	ASC1	MUX1	MUX2	MUX3	Last
-	+	+	+	+	+	-	-

Parameter Description

<outBbcGain>(num)(^SNFW)

Negative DAC gain (attenuation) adjustable in four 6 dB steps from 0 dB to -18 dB (0=0 dB, 3=-18 dB)

0...3

<outCalibrate>(num)(^SNFW)

Formula to calculate the value of the 5 volume steps selectable with parameter <outStep>:
Attenuation = 20 * log (2 * outCalibrate[n] / 32768)

0...32767

<outStep>(num)

Volume steps 0 - 4, each defined with outCalibrate[n]

0...[4]

<sideTone>(num)(^SNFW)

Multiplication factor for the sidetone gain.
Formula to calculate how much of the original microphone signal is added to the earpiece signal:
Sidetone gain in dB = 20 * log (sideTone / 32768).

0...32767

Notes

- <outCalibrate> specifies the amount of volume of each <outStep>. The range of each <outCalibrate> is up to 65535, but will be suppressed to 32767. A value above <outCalibrate>= 65535 will cause an error.
- The range of <sideTone> is up to 65535, but will be suppressed to 32767. A value above <sideTone>= 65535 will cause an error.
- Any change to <outStep> takes effect in audio modes 2 to 6. That is, when you change <outStep> and then select another mode with AT^SNFS, the same step will be applied. Nevertheless, the sound quality and the amount of volume are not necessarily the same, since all remaining audio parameters can use different values in either mode.
- Audio mode 1 is fixed to <outStep>=4. In this mode, any attempt to change <outStep> or other parameters returns an error.
- The value of <outStep> is stored non-volatile when the ME is powered down with AT^SMSO or reset with AT+CFUN=x,1. Any other parameters changed with AT^SNFO need to be saved with AT^SNFW for use after restart. See also AT^SNFD for details on restoring factory defaults.
- The values of <outStep> can also be changed with AT^SNFV and AT+CLVL.
- CAUTION! When you adjust audio parameters avoid exceeding the maximum allowed level. Bear in mind that exposure to excessive levels of noise can cause physical damage to users!

17.14 AT^SNFPT Set progress tones

AT^SNFPT controls the Call Progress Tones generated at the beginning of a mobile originated call setup. Please note that the setting is stored volatile, i.e. after restart or reset, the default value 1 will be restored.

Syntax

Test Command

```
AT^SNFPT=?
```

Response(s)

```
^SNFPT: (list of supported <pt>s)
OK
```

Read Command

```
AT^SNFPT?
```

Response(s)

```
^SNFPT: <pt>
OK
ERROR
+CME ERROR: <err>
```

Write Command

```
AT^SNFPT=<pt>
```

Response(s)

```
OK
ERROR
+CME ERROR: <err>
```

PIN	ASC0	ASC1	MUX1	MUX2	MUX3		Last
-	+	+	+	+	+	-	-

Parameter Description

<pt>(num)	
0	Disables Call Progress Tones
1(P)	Enables Call Progress Tones (audible tones shortly heard on the phone when ME starts to set up a call.)

17.15 AT^SNFS Select audio hardware set

The AT^SNFS write command serves to set the audio mode required for the connected equipment.

Syntax

Test Command

```
AT^SNFS=?
```

Response(s)

```
^SNFS: (list of supported <audMode>s)
OK
```

Read Command

```
AT^SNFS?
```

Response(s)

```
^SNFS: <audMode>
OK
ERROR
+CME ERROR: <err>
```

Write Command

```
AT^SNFS=<audMode>
```

Response(s)

```
OK
ERROR
+CME ERROR: <err>
```

PIN	ASC0	ASC1	MUX1	MUX2	MUX3	🔔	Last
-	+	+	+	+	+	-	-

Parameter Description

<audMode>(num)(^SNFW)	
0	Audio mode 0: Test mode with activated audio loop. It is not possible to switch to this mode using AT^SNFS. Use AT^SCFG="Audio/Loop" instead (see description for AT^SCFG parameter <al> for details).
1(P)	Audio mode 1: Standard mode optimized for the reference handset, that can be connected to the analog audio interface (see [2] for information on this handset). To adjust the volume use the knob of the reference handset. In audio mode 4, this handset can be used with user defined parameters. Note: The default parameters are determined for type approval and are not adjustable with AT commands. AT^SNFD restores <audMode> 1.
2	Audio mode 2: Customer specific mode for a basic handsfree (speakerphone) device (Siemens Car Kit Portable).
3	Audio mode 3: Customer specific mode for a mono-headset.
4	Audio mode 4: Customer specific mode for a user handset.
5	Audio mode 5: Customer specific mode.
6	Audio mode 6: Customer specific mode.

Notes

- The write command can be used during a voice call to switch back and forth between different modes. This allows the user, for example, to switch handsfree operation (speakerphone) on and off.
- Users should be aware that <outStep> is a global setting. This means, when another audio mode is selected during a call, the value of <outStep> does not change. This is also true for mute operation which can be set with AT^SNFM or AT+CMUT: If the microphone is muted and the user selects another audio mode during the call, then the microphone remains muted until explicitly changed. Exception: In audio mode 1 <outStep>=4 is fix.
- For use after restart of the module, you are advised to store the selected mode to the audio profile saved with AT^SNFW. Otherwise, audio mode 1 will be active each time the module is powered up.

17.16 AT^SNFTTY Signal TTY/CTM audio mode capability

BGS2-E offers basic support for equipment using the CTM standard (Cellular Text Telephone Modems). The benefit of CTM is that text characters typed on a TTY device (Text Telephone Type-writer) can be transformed into special audio burst signals for reliable transmission via the existing speech channels of a cellular phone system.
If CTM mode is activated, the ME will set the necessary bearer capability bit on outgoing (mobile originated) calls and incoming calls with this bearer capability bit set are accepted. The TE needs to decode the special audio burst signals.
If CTM mode is disabled, the ME will clear the bearer capability bit on mobile originated calls and incoming calls with the bearer capability bit set are rejected because the BGS2-E expects that CTM coded speech data cannot be decoded by the TE.
Designed to set the module's speech system into CTM mode, the AT^SNFTTY command allows a CTM device to be connected to one of the three audio interfaces of BGS2-E. Traditional TTY devices that do not incorporate CTM functionality can be connected through an external TTY-to-CTM adapter.
Related documents: Refer to the relevant standards, such as 3GPP TS 26.226 (ETSI TS 126 226) and 3GPP TS 23.228 (ETSI TS 123 226). 3GPP documentation can be retrieved, for example, from http://www.3gpp.org/specs/specs.htm. Application Note 22 "Using TTY/CTM equipment" supplies information needed to connect TTY/CTM equipment to the BGS2-E.

Requirements for using TTY/CTM features:

- The TTY/CTM functionality requires audio mode 5 or 6 which is set by AT^SNFS. Recommended is AT^SNFS=6, with AT^SNFI=1,32767. When the appropriate audio settings are enabled you may select either AT^SNFTTY=1 or 2.

Syntax

Test Command

```
AT^SNFTTY=?
```

Response(s)

```
^SNFTTY: (list of supported <audioState>s)
OK
```

Read Command

```
AT^SNFTTY?
```

Response(s)

```
^SNFTTY: <audioState>
OK
ERROR
+CME ERROR: <err>
```

Write Command

```
AT^SNFTTY=<audioState>
```

Response(s)

```
OK
ERROR
+CME ERROR: <err>
```

PIN	ASC0	ASC1	MUX1	MUX2	MUX3		Last
-	+	+	+	+	+	-	-

Parameter Description

<audioState>(num)

0(P)	Audio path is in normal speech mode.

1	Audio path is in TTY/CTM mode (external CTM modem).
2	Audio path is in TTY/CTM mode (internal CTM modem).

17.17 AT^SNFV Set loudspeaker volume

AT^SNFV can be used to set the volume of the loudspeaker to the value <outCalibrate> addressed by <outStep>. The read and write commands refer to the active audio mode. The write command works only in audio modes 2 to 6.

Syntax

Test Command

AT^SNFV=?

Response(s)

^SNFV: (list of supported <outStep>s)
OK

Read Command

AT^SNFV?

Response(s)

^SNFV: <outStep>
OK
ERROR
+CME ERROR: <err>

Write Command

AT^SNFV=<outStep>

Response(s)

OK
ERROR
+CME ERROR: <err>

PIN	ASC0	ASC1	MUX1	MUX2	MUX3		Last
-	+	+	+	+	+	-	-

Parameter Description

<outStep>(num)

The actual volume of each step is defined by the parameter <outCalibrate>, which can be set with AT^SNFO.

0...4(P)

Notes

- Any change to <outStep> takes effect in audio modes 2 to 6. That is, when you change <outStep> and then select another mode with AT^SNFS, the same step will be applied. Nevertheless, the actual volume can be quite different, depending on the values of <outCalibrate> set in each mode. The only exception is audio mode 1 which is fixed to <outStep>=4.
- <outStep> is stored non-volatile when the ME is powered down with AT^SMSO or reset with AT+CFUN=1,1. <outStep> is not stored by AT^SNFW.
- <outStep> can also be changed by AT^SNFO (Section 17.13) and AT+CLVL (Section 17.4).

17.18 AT^SNFW Write audio setting in non-volatile store

AT^SNFW causes the TA to write the currently selected audio parameters to non-volatile store. The saved audio profile includes the following parameters:
AT^SNFA: <atten>
AT^SNFI: <inBbcGain>, <inCalibrate>
AT^SNFO: <outBbcGain>, <outCalibrate>[0 to 4], <sideTone>
AT^SNFS: <audMode>

Syntax

Test Command

```
AT^SNFW=?
```

Response(s)

```
OK
```

Exec Command

```
AT^SNFW
```

Response(s)

```
OK
ERROR
+CME ERROR: <err>
```

PIN	ASC0	ASC1	MUX1	MUX2	MUX3		Last
-	+	+	+	+	+	-	-

17.19 AT^SRTC Ring tone configuration

The AT^SRTC read command returns the current <type> and current <volume>. The read command can be used while test playback is off or on. In the latter case, see execute command for details.

The AT^SRTC execute command is intended only for testing. It starts to play a melody from the audio output currently selected with AT^SNFS. To deactivate test playback use AT^SRTC again.
During test playback, you can enter the write command to select another melody and adjust the volume. Also, you can enter the read command to check the type and volume of the current ring tone, and to view the status of playback (on / off).

The AT^SRTC write command chooses the type and volume of ring tones. The selected <type> and <volume> are stored non-volatile. The only exception is <type>=0 which is not stored because it is intended only to quickly mute the tone currently played. So <type>=0 only stops immediately the audible ring tone, but does not terminate the RING URC.

Syntax

Test Command

```
AT^SRTC=?
```

Response(s)

```
^SRTC:(list of supported) <type>s, (list of supported) <volume>s
OK
```

Read Command

```
AT^SRTC?
```

Response(s)

```
^SRTC: <type>, <volume>, <status>
OK
ERROR
+CME ERROR: <err>
```

Exec Command

```
AT^SRTC
```

Response(s)

```
OK
ERROR
+CME ERROR: <err>
```

Write Command

```
AT^SRTC=[<type>][, <volume>]
```

Response(s)

```
^SRTC: <type>, <volume>
OK
ERROR
+CME ERROR: <err>
```

PIN	ASC0	ASC1	MUX1	MUX2	MUX3	🔔	Last
-	+	+	+	+	+	-	-

Parameter Description

<type>(num)

Type of ring tone. You have a choice of 7 different ring tones and melodies. All will be played from the audio output selected with the AT^SNFS command. <type>=0 is only intended for muting.

0	Mutes the currently played tone immediately.
1	Sequence 1
2	Sequence 2
3(D)	Sequence 3
4	Sequence 4
5	Sequence 5
6	Sequence 6
7	Sequence 7

<volume>(num)

Volume of ring tone, varies from low to high

0(D)	Mute
1	Very low
2	Identical with 1
3	Low
4	Identical with 3
5	Middle
6	Identical with 5
7	High

<status>(num)

Status of test ringing. Indicates whether or not a melody is currently being played back for testing

0	Switched off
1	Switched on

Note

- Before first using ring tones note that the following settings apply:
  We have chosen to let you decide your own preferences when you start using ring tones. Therefore, factory setting is AT^SRTC=3,0,0 (ring tones are muted). To activate ring tones for the very first time, first enter the write command and simply change the volume. After applying a firmware update the volume and type selected before the firmware update will be preserved.

18. Hardware related Commands

All AT commands described in this chapter are related to the hardware interface of the BGS2-E. Further information regarding this interface is available in the "BGS2-E Hardware Interface Description" [2].

18.1 AT+CCLK Real Time Clock

Syntax

Test Command

```
AT+CCLK=?
```

Response(s)

```
OK
```

Read Command

```
AT+CCLK?
```

Response(s)

```
+CCLK: <time>
OK
```

Write Command

```
AT+CCLK=<time>
```

Response(s)

```
OK
ERROR
+CME ERROR: <err>
```

PIN	ASC0	ASC1	MUX1	MUX2	MUX3		Last
-	+	+	+	+	+	+	-

Reference(s)

GSM 07.07

Parameter Description

`<time>`(str)

Format is "yy/mm/dd,hh:mm:ss", where the characters indicate the two last digits of the year, followed by month, day, hour, minutes, seconds; for example 6th of July 2005, 22:10:00 hours equals to "05/07/06,22:10:00" Factory default is "03/01/01,00:00:00"

Notes

- `<time>` is retained if the device enters the Power Down mode via `AT^SMSO`.
- `<time>` will be reset to its factory default if power is totally disconnected. In this case, the clock starts with `<time>`= "03/01/01,00:00:00" upon next power-up.

18.2 AT+CALA Alarm Configuration

AT+CALA allows to set an alarm time for the BGS2-E. When the alarm time is reached and the alarm is executed the ME returns an Unsolicited Result Code (URC) and the alarm time is reset to "00/01/01,00:00:00".
The alarm can adopt two functions, depending on whether or not you switch the GSM engine off after setting the alarm:

- Reminder message: You can use the alarm function to generate reminder messages. For this purpose, set the alarm as described below and do not switch off or power down the ME. When executed the message comes as "+CALA" URC which optionally may include a user defined <text>.
- Alarm mode: You can use the alarm function to restart the ME when powered down. For this purpose, set the alarm as described below. Then power down the ME via AT^SMSO. When the alarm time is reached the ME will wake up to Alarm mode, notified by the "^SYSSTART ALARM MODE" URC and, if configured, by an additional "+CALA" URC with a user defined <text>.
  During Alarm mode the ME is deregistered from the GSM network and only a limited number of AT commands is available, for details refer to Section 21.4, Availability of AT Commands Depending on Operating Mode of ME.
  To return the ME to full operation (normal operating mode) it is necessary to restart the ME by driving the ignition line (IGT pin of application interface) to ground or by using AT+CFUN=x,1. Transition to Normal mode is indicated by the "^SYSSTART" URC if AT+IPR is set to a fixed bit rate.
  For details please refer to [2].

AT+CALA test command returns the supported array index values <n>, the supported alarm types <type> and the maximum length of the text <tlength>.
AT+CALA read command returns the current alarm settings.

Syntax

Test Command

```
AT+CALA=?
```

Response(s)

```
+CALA: (list of supported<n>s), (list of supported<type>s), (list of supported<tlength>s)
OK
ERROR
+CME ERROR: <err>
```

Read Command

```
AT+CALA?
```

Response(s)

```
+CALA: <time>, <n>, <type>, <text>
+CALA: ...
OK
ERROR
+CME ERROR: <err>
```

Write Command

```
AT+CALA=<time>, <n>[, <type>[, <text>]]
```

Response(s)

```
OK
ERROR
+CME ERROR: <err>
```

PIN	ASC0	ASC1	MUX1	MUX2	MUX3		Last
-	+	+	+	+	+	+	-

Reference(s)

GSM 07.07

Unsolicited Result Codes

URC 1

```
+CALA: [<text>]
```

Indicates reminder message.

URC 2

```
^SYSSTART ALARM MODE
+CALA: <text>
```

Indicates ME wake-up into Alarm mode.

URC 3

```
+CALA: Unexpected Error
```

Indicates Unexpected CALA functionality error. When such an error occurs all alarm timers will be stopped and reset to default values.

Parameter Description

<time>(str)

Format is "yy/MM/dd,hh:mm:ss". For example, 6th of July 2005, 22:10:00 equals to "05/07/06,22:10:00". See also AT+CCLK.
If you attempt to set <time> to a date and time which is older than the ME's current time, one "+CALA" URC will be returned, and no alarm timer will be set.
To clear a given alarm before its scheduled time simply enter an empty string for parameter <time>.

<n>(num)

Integer type value indicating the array index of the alarm.
0 .. 4

<type>(num)

Integer type value indicating the type of the alarm.

0	Alarm indication: text message via serial interface

<text>(str)

String type value indicating the text to be displayed when alarm time is reached; maximum length is <tlength>. By factory default, <text> is undefined.
Note: <text> will be stored to the non-volatile flash memory when the device enters the Power Down mode via AT^SMSO. Once saved, it will be available upon next power-up, until you overwrite it by typing another text. This eliminates the need to enter the full string when setting a fresh alarm.
<text> should not contain characters which are coded differently in ASCII and GSM (e.g. umlauts), see also "Supported character sets" and "GSM alphabet tables".

<tlength>(num)

Integer type value indicating the maximum length of <text>. The maximum length is 16.

Notes

- After the alarm was executed the parameter <time> of AT+CALA will be reset to "00/01/01,00:00:00", but <text> will be preserved as described above.
- If ME is totally disconnected from power supply the most recently saved configuration of +CALA: <time>,<n> [,<type>[,<text>]] will be presented when ME is powered up.
- When an alarm is set on a given ASC interface only this interface will be allowed for further AT+CALA read/write operations. Using the read/write AT+CALA command on another interface will result an ERROR until the last alarm timer was executed or deleted.

Examples

EXAMPLE 1

You may want to configure a reminder message for July 31, 2005, at 9.30h, including the message "Good Morning".

```
AT+CALA="05/07/31,09:30:00",0,0,"Good Morning"
OK
```

Do not switch off the GSM engine.When the alarm occurs the ME returns the following URC:

```
+CALA: Good Morning
```

EXAMPLE 2

To set a fresh alarm using the same message as in Example 1, simply enter date, time and alarm index. <type>, <text>, <tlength> can be omitted:

```
AT+CALA="05/07/31,08:50:00",0
OK
```

When the alarm is executed the URC comes with the same message:

```
+CALA: Good Morning
```

EXAMPLE 3

To enable the ME to wake up into Alarm mode, e.g. on July 20, 2005, at 8.30h, enter

```
AT+CALA="05/07/20,08:30:00",0
OK
```

Next, power down the ME:

```
AT^SMSO
^SMSO: MS OFF
OK
^SHUTDOWN
```

When the alarm is executed the ME wakes up to Alarm mode and displays a URC. If available, this line is followed by the individual <text> most recently saved. If no individual message was saved only the first line appears.

```
^SYSSTART ALARM MODE
+CALA: Good Morning
```

18.3 AT^SBV Battery/Supply Voltage

AT^SBV allows to monitor the supply (or battery) voltage of the module. The voltage is continuously measured at intervals depending on the operating mode of the RF interface. The duration of a measurement period ranges from 0.5s in TALK / DATA mode up to 50s when BGS2-E is in IDLE mode or Limited Service (deregistered). The displayed value is averaged over the last measuring period before the AT^SBV command was executed.

The measurement is related to the reference points of BATT+ and GND. For details on the reference points please refer to the Hardware Interface Description [2].

Syntax

Test Command

```
AT^SBV=?
```

Response(s)

```
OK
ERROR
+CME ERROR: <err>
```

Exec Command

```
AT^SBV
```

Response(s)

```
^SBV: <value>
OK
ERROR
+CME ERROR: <err>
```

PIN	ASC0	ASC1	MUX1	MUX2	MUX3	🔔	Last
-	+	+	+	+	+	+	-

Parameter Description

<value>(num)

Supply (or battery) voltage in mV

18.4 AT^SSYNC Configure SYNC Pin

The AT^SSYNC controls the usage of the module's GPIO5/LED line. Depending on the connected device the pin can either operate a status LED or is available as GPIO. For more information see also [2] and Section 19.1.1, GPIO configuration table.

Syntax

Test Command

AT^SSYNC=?

Response(s)

^SSYNC: list of supported <mode>s
OK

Read Command

AT^SSYNC?

Response(s)

^SSYNC: <mode>
OK

Write Command

AT^SSYNC=<mode>

Response(s)

OK

PIN	ASC0	ASC1	MUX1	MUX2	MUX3		Last
-	+	+	+	+	+	-	-

Parameter Description

<mode>(num)

Operation mode of the GPIO5/LED pin. Setting is stored non-volatile.

0(D)	GPIO mode: Status LED function is disabled. The GPIO5/LED line is available as GPIO and can be configured using the GPIO related AT commands as described in Chapter 19., GPIO Commands.
1	LED mode on: Enables the GPIO5/LED pin to drive a status LED installed in your application as specified in [2]. The coding of the LED is described in Section 18.4.1, ME status indicated by status LED patterns.

18.4.1 ME status indicated by status LED patterns

The following table lists the possible patterns of status LED behavior, and describes the ME operating status indicated by each pattern if AT^SSYNC parameter <mode>=1.

During the transition from one LED pattern to another the "on" and/or "off" periods of the LED may vary in length. This is because an event that triggers the change may occur any time and, thus, truncate the current LED pattern at any point.

Table 18.1: Modes of the LED and indicated ME functions

LED behavior	ME operating status if AT^SSYNC=1
Permanently off	ME is in one of the following modes: - POWER DOWN mode - NON-CYCLIC SLEEP mode - CYCLIC SLEEP mode with no temporary wake-up event in progress [1)]
600 ms on / 600ms off	Limited Network Service: No SIM card inserted or no PIN entered, or network search in progress, or ongoing user authentication, or network login in progress.
75 ms on / 3 s off	IDLE mode: The mobile is registered to the GSM network (monitoring control channels and user interactions). No call is in progress.
75 ms on / 75 ms off / 75 ms on / 3 s off	One or more GPRS PDP contexts activated.
500 ms on / 25 ms off	Packet switched data transfer is in progress.
Permanently on	Depending on type of call: Voice call: Connected to remote party. Data call: Connected to remote party or exchange of parameters while setting up or disconnecting a call.

1) When a temporary wake-up event (for example a call, a URC, a packet switched transfer) occurs in CYCLIC SLEEP mode the LED flashes according to the patterns listed above. See Section 2.8.1, Wake up the ME from SLEEP mode for details on the various SLEEP modes and wake-up events.

18.5 AT^SCTM Critical Operating Temperature Monitoring

AT^SCTM allows to monitor the operating temperature range of the BGS2-E device. Refer to "BGS2-E Hardware Interface Description" [2] for specifications on critical temperature ranges.
AT^SCTM write command controls the presentation of URCs to report critical operating temperature limits.
Use parameter <UrcMode> to enable (1) and disable (0) URC presentation.
Important: Even if setting is <UrcMode>=0 URC presentation is enabled during the two minute guard period after the module was switched on. After expiry of the two minute guard period, the presentation will be disabled, i.e. no URCs with alert levels "1" or "-1" will be generated. During this period BGS2-E will not switch off, even if the critical temperature limit is exceeded. This allows the user to set up emergency calls before BGS2-E switches off. For details refer to Section 18.5.1, Deferred shutdown.
To avoid damage the module will shut down once the critical temperature is exceeded.
The procedure is equivalent to the power-down initiated with AT^SMSO.

Level "2" or "-2" URCs are followed by immediate shutdown, except in cases described in Section 18.5.1, Deferred shutdown. The presentation of these URCs is always enabled, i.e. they will be output even though the factory setting AT^SCTM=0 was never changed. URCs indicating alert levels "1" or "-1" are intended to enable the user to take appropriate precautions, such as protect BGS2-E from exposure to extreme conditions, or save or back up data etc.

AT^SCTM read command returns:

- The URC presentation mode.
- Information about the current temperature range of the BGS2-E device.
- The board temperature (in degree Celsius) if parameter <tempCtrl>=1.

Syntax

Test Command

```
AT^SCTM=?
```

Response(s)

```
^SCTM:(list of supported <UrcMode>s)[, (list of supported <tempCtrl>s)]
OK
```

Read Command

```
AT^SCTM?
```

Response(s)

```
^SCTM: <UrcMode>, <UrcCause>[, <temp>]
OK
ERROR
+CME ERROR: <err>
```

Write Command

```
AT^SCTM=<UrcMode>[, <tempCtrl>]
```

Response(s)

```
OK
ERROR
+CME ERROR: <err>
```

PIN	ASC0	ASC1	MUX1	MUX2	MUX3		Last
-	+	+	+	+	+	+	-

Unsolicited Result Code

URCs will be automatically sent to the TE when the temperature reaches or exceeds the critical level, or when it is back to normal.

^SCTM_B: <UrcCause>

URC for BGS2-E device temperature warning.

Parameter Description

<UrcMode>(num)	
URC presentation mode	
0(&F)(P)	Disable URC presentation (except for <UrcCause> equal to -2 or +2).
1	Enable URC presentation.

<UrcCause>(num)	
-2	Below lowest temperature limit (causes immediate switch-off)
-1	Below low temperature alert limit
0	Normal operating temperature
1	Above upper temperature alert limit
2	Above uppermost temperature limit (causes immediate switch-off)

<tempCtrl>(num)	
0(&F)(P)	Suppress output of <temp> in read command.
1	Output <temp> in read command.

<temp>(num)
Board temperature in Celsius. Is comprised between the lowest temperature warning level and the uppermost temperature warning level.

Examples

EXAMPLE 1

URCs issued when the operating temperature is out of range:

^SCTM_B: 1	Caution: Module close to overtemperature limit.
^SCTM_B: 2	Alert: Module is above overtemperature limit and switches off.
^SCTM_B: -1	Caution: Module close to undertemperature limit.
^SCTM_B: -2	Alert: Module is below undertemperature limit and switches off.

EXAMPLE 2

URCs issued when the temperature is back to normal (URC is output once):

^SCTM_B: 0	Module back to normal temperature.

18.5.1 Deferred shutdown

In the following cases, automatic shutdown will be deferred if a critical temperature limit is exceeded:

- while an emergency call is in progress
- during a two minute guard period after powerup. This guard period has been introduced in order to allow for the user to make an emergency call. The start of any one of these calls extends the guard period until the end of the call. Any other network activity may be terminated by shutdown upon expiry of the guard time.

While in a "deferred shutdown" situation, the engine continues to measure the temperature and to deliver alert messages, but deactivates the shutdown functionality. Once the guard period is expired or the call is terminated, full temperature control will be resumed. If the temperature is still out of range, the ME switches off immediately (without another alert message).
CAUTION! Automatic shutdown is a safety feature intended to prevent damage to the module. Extended usage of the deferred shutdown facilities provided may result in damage to the module, and possibly other severe consequences.

18.6 AT^SRADC Configure and Read ADC Measurement

The AT^SRADC controls the module's Analog-to-Digital Converter. The ADC can be used to measure the voltage of external devices connected to the ADC inputs. The AT^SRADC configures the parameters required for ADC measurement and returns the measurement result(s). The value(s) can be delivered once on request by using the single measurement mode, or periodically by specifying the measurement interval.

Note that the BGS2-E Module uses an unbalanced input with one pin (ADC1_IN, see also [2]).

Syntax

Test Command

```
AT^SRADC=?
```

Response(s)

```
^SRADC: (list of supported <ch>s), (list of supported <op>s), (list of supported <it>s)
OK
```

Read Command

```
AT^SRADC?
```

Response(s)

```
^SRADC: <ch>, <op>, <it>
OK
```

Write Command

Single measurement. Implies automatic channel open and close (<op>=1 and 0) and no interval (<it>=0).

```
AT^SRADC=<ch>
```

Response(s)

```
^SRADC: <ch>, <count>, <value>
OK
ERROR
+CME ERROR: <err>
```

Write Command

Periodic measurement. Requires <op>=1 and <it>=100ms...30000ms

```
AT^SRADC=<ch>, <op>, <it>
```

Response(s)

```
OK
ERROR
+CME ERROR: <err>
```

PIN	ASC0	ASC1	MUX1	MUX2	MUX3		Last
-	+	+	+	+	+	-	-

Unsolicited Result Code

ADC measurement URC (only used in periodic measurement mode).

```
^SRADC: <ch>, <count>, <value>[, <value>[, <value>[, <value>[, <value>[, <value>[, <value>[, <value>[, <value>[, <value>]]]]]]]]]
```

Parameter Description

<ch>(num)

ADC channel

0	ADC channel (ADC1_IN)

<op>(num)	
Operation	
Open or close ADC channel for measurement. If parameter is not specified, then single measurement mode is initiated (incl. open and close of channel). Single measurement is not allowed if the channel is already open.	
[0]	Close ADC channel (value of parameter <it> is ignored).
1	Open ADC channel

<it>(num)	
Measurement interval	
Parameter is used only if operation <op> is 1 (Open).	
[0]	Single measurement mode (incl. close of channel)
100...30,000	Output interval in ms in periodic measurement mode.

<value>(num)	
Measurement value	
0...1023	Measured raw value of the actual voltage applied at the ADC1_IN input pin in 1,173 mV.
32767	URCs lost

<count>(num)	
1...11	Number of measured samples In single measurement mode: <count> is always 1. In periodic measurement mode: <count> is the number of <value>s indicated by the URC "^SRADC". The higher the sample rate set with <it>, the more measured values are reported within the URC "^SRADC".

Notes

- If power saving is enabled with AT+CFUN, take into account that the periodic mode lets the ME consume current each time the measurement is performed. This reduces the effect of power saving and thus decreases the operation time.
- If an AT command is input on the same interface where the periodic measurement mode is on, up to 5 "^SRADC" URCs are queued up and sent after AT command completion.
  If more than 5 URCs occur before the AT command is completed their measurement values are lost. In this case, one additional URC with a negative <count> and the single value "32767" is sent along with the first 5 buffered URCs. The negative <count> indicates the number of lost measurement values (not the number of URCs). See example below.

Examples

EXAMPLE 1

Single measurement

```
AT^SRADC=0                    Open the first ADC channel for single measurement.
^SRADC: 0,1,78
OK
```

EXAMPLE 2

Periodic measurement at low sample rate (5s):

AT^SRADC=0,1,5000 ^SRADC: 0,1,76 ^SRADC: 0,1,78 ^SRADC: 0,1,76 ^SRADC: 0,1,76 AT^SRADC=0,0 OK	Start periodic measurement mode on the first ADC channel. Samples are taken every 5s. Every 5s the URC "^SRADC" appears to report the measured voltages. The second parameter represents the number of measured samples, in this case only one. Stop the periodic measurement

EXAMPLE 3

Periodic measurement at high sample rate (250ms):

AT^SRADC=0,1,250 ^SRADC: 0,4,76,76,77,76 ^SRADC: 0,4,76,76,75,76 ^SRADC: 0,5,77,77,76,76,76 ^SRADC: 0,4,76,76,75,76 AT^SRADC=0,0 OK	Start periodic measurement on the first ADC channel. Samples are taken every 250ms. Every second a URC "^SRADC" appears to report the measured voltage. The number of samples is 4 or 5. Stop the periodic measurement

EXAMPLE 4

Handling of "^SRADC" URCs and AT command execution on the same interface:

AT^SRADC=0,1,250 ^SRADC: 0,4,76,76,77,76 ^SRADC: 0,5,77,77,76,76,76 ^SRADC: 0,4,76,76,75,76 ^SRADC: 0,4,76,76,75,76 AT^SRADC? ^SRADC: 0,1,250 OK ^SRADC: 0,11,75,75,75,75,75,75,75,75,75,75,75 ^SRADC: 0,8,75,75,75,75,75,75,77 ^SRADC: 0,1,75 ^SRADC: 0,4,76,76,75,76 ^SRADC: 0,4,76,76,75,76 ^SRADC: 0,5,77,77,76,76,76 ^SRADC: 0,4,76,76,77,76 ^SRADC: 0,4,76,76,75,76 AT^SRADC? ^SRADC: 0,1,250 OK ^SRADC: 0,11,75,75,75,75,75,75,75,75,75,75,75 ^SRADC: 0,11,73,74,73,74,73,73,73,74,74,73,73 ^SRADC: 0,11,74,73,74,73,73,73,73,73,73,73,73 ^SRADC: 0,11,73,73,74,74,73,73,74,73,73,74,74 ^SRADC: 0,11,73,73,73,73,73,73,73,74,74,73,73 ^SRADC: 0,8,73,73,74,73,73,73,73,32767 ^SRADC: 0,4,74,74,73,73 ^SRADC: 0,4,75,75,75,75	Start periodic measurement mode on the first ADC channel. Samples are taken every 250ms. Input of AT command and <CR> takes some seconds. some URCs were buffered during command input and sent after completion. More URCs are delivered. Input of AT command and <CR> takes 90s. some URCs were buffered during command input and sent after completion The URC indicates lost measurement results. More URCs are delivered.

18.7 AT^SSPI Serial Protocol Interface

AT^SSPI enables BGS2-E to be connected to external I²C devices. The write command configures and activates the I²C interface and changes from command mode into data mode. User data can be transmitted in ASCII mode or Transparent mode. The ME will detect the mode depending on the start character of a given Read or Write Request frame. For further details please refer to Section 18.7.1, Transmitting Data over AT Interface.

If AT&C equals 1 (power-up and factory default) the DCD line of the connected serial port is high as long as the ME is in I²C data mode.

Syntax

Test Command

```
AT^SSPI=?
```

Response(s)

```
^SSPI:(list of supported <basicConfiguration>s), (list of supported <StopStartPeriod>s)
OK
```

Read Command

```
AT^SSPI?
```

Response(s)

```
^SSPI: <connectionState>, <basicConfiguration>, <StopStartPeriod>
OK
ERROR
+CME ERROR: <err>
```

Write Command

```
AT^SSPI=[<basicConfiguration>[, <StopStartPeriod>]]
```

Response(s)

```
CONNECT
```
(indicates that ME has entered data mode)
```
ERROR
+CME ERROR: <err>
```

PIN	ASC0	ASC1	MUX1	MUX2	MUX3		Last
-	+	+	+	+	+	-	+

Parameter Description

<connectionState>(num)

Parameter returned by the AT^SSPI? read command.
Indicates whether or not the I²C channel is used. When the channel is open and the ME is in data mode on one interface, the read command can only be used on the other interface. For example, when the channel was opened on ASC0, you can use ASC1 to check the status.

[0](&F)	Not connected. All following parameters in the read command response are the factory settings ^SSPI: 0,0010,0000.
1	Connected (channel open, ME in data mode). All following parameters in the read command response are the values currently used, for example ^SSPI: 1,0000,00ff.

<basicConfiguration>(num)

Parameter <basicConfiguration> is a 16 bit word which contains four subparameters to control the following functions:

Subparameter	Bit	Hexadecimal	Selected function
Interface type	D15 - D12	0	I²C bus (default)
Port	D11 - D8	0	Internal port
Data transfer rate	D7 - D4	0 1	I²C at 100 kbps I²C at 400 kbps (default)
Protocol	D3 - D0	0	Data transmission protocol for ASCII mode and Transparent mode

`<StopStartPeriod>`(num)

This parameter specifies the time (in milliseconds) from a valid stop condition until the beginning of the next start condition. Resolution is 1 TDMA frame period, i.e. 4,616 milliseconds.

[0](&F)...FFFF Unsigned 16 bit value

18.7.1 Transmitting Data over AT Interface

This section provides information on the protocol used for data transmission to or from I²C devices and explains the data mode. It is assumed that you are familiar with the I²C specification.
Throughout this section the following document conventions are used to mark the direction of send and receive:
Read or Write Request: AT → I²C device driver
Response: AT ← I²C device driver

The I²C bus expects all data as 2-digit HEX values 0...9, a...f, A...F. For data input (Read or Write Requests from I²C master to I²C slave) you can choose either ASCII mode or Transparent mode. It is possible to change the mode for every Read or Write Request frame. The ME will detect the mode depending on the start character of a Read or Write Request frame, either < for ASCII mode or [for Transparent mode. For data output (Responses from I²C slave to I²C master) the mode depends on the frame content: Response frames with data body are sent in ASCII mode unless Transparent mode was used at least one time during a session. The first Read or Write Request frame given in Transparent mode enables Transparent mode for all subsequent Response frames with data body, regardless of the mode used for the Requests to follow. Response frames without data body (status information) are always sent in ASCII mode and employ the same start and close characters, such as {1+}, {1!0000} etc. Read Requests, Write Requests and Responses with data body are mode specific and employ different start and close characters. All valid special characters are listed in the tables below.

ASCII mode:
Every data byte has to be coded as 2 ASCII characters. Every ASCII character determines 4 bits = 1 nibble. The internal I²C driver converts the given ASCII data into HEX values.

Transparent mode:
Every data byte is directly transmitted and interpreted by the ME. Data is transmitted in a transparent manner, similar to the way of handling circuit switched data in data online mode. This eliminates the need for the I²C driver to convert any data.
Transparent mode minimizes the overhead on the serial interface when large amounts of data are to be transmitted. Therefore, the module uses Transparent frames only for frames with data content, but not for status information.

Open I²C channel
To change from command mode to data mode use the AT^SSPI write command. The CONNECT response indicates that the ME has entered data mode.

Close I²C channel and return to AT command mode:
ASCII mode: Send ASCII character # (0x23) or escape sequence +++ inside or outside a frame.
Transparent mode: Send escape sequence +++ or toggle the DTR line (depending on AT&D settings) inside or outside a frame. The ASCII character # (0x23) character can be sent outside a frame.

Table 18.2: Frame characters and channel close characters specific to ASCII mode

Direction AT - Driver	Function in protocol	Special character	Hex value	Description
→	Start a Request	<	0x3C	Indicates beginning of Write or Read Request frame.
→	Terminate a Request	>	0x3E	Indicates end of Write or Read Request frame.
→	Repeated Start Message	*	0x2A	Triggers a Repeated Start condition.
→	Channel Close	# or +++	0x23	Causes the transfer to be aborted and takes the ME back to AT command mode. # or escape sequence +++ can be sent any time inside or outside a frame.

Table 18.3: Frame characters and channel close characters specific to Transparent mode

Direction AT - Driver	Function in protocol	Special character	Hex value	Description
→	Start a Request	[	0x5B	Indicates beginning of Write or Read Request frame.
→	Terminate a Request	]	0x5D	Indicates end of Write or Read Request frame.
←	Start a Response	[	0x5B	Indicates beginning of Response frame with data body.
←	Terminate a Response	]	0x5D	Indicates end of Response frame with data body.
→	Repeated Start Message	*	0x2A	Triggers a Repeated Start condition.
←	Length indicator	$	0x24	Indicator for the following 2 length bytes in Response frame.
→	Channel Close	# or +++		Causes the transfer to be aborted and takes the ME back to AT command mode. Escape sequence +++ and DTR toggling can be used any time inside or outside a frame. # can be used outside a frame only.

Table 18.4: Response characters valid for ASCII mode and Transparent mode:

Direction AT - Driver	Function in protocol	Special character	Hex value	Description
←	Start a Response	{	0x7B	Indicates beginning of Response frame. *ASCII mode:* with or without data body. *Transparent mode:* without data body
←	Terminate a Response	}	0x7D	Indicates end of Response frame. *ASCII mode:* with or without data body. *Transparent mode:* without data body
←	Protocol error	!	0x21	Reports to the AT interface that the Request frame does not comply with the protocol definition (syntax error).
←	Transmission OK (in I²C protocol referred to as ACK)	+	0x2B	Notifies the AT interface that data were successfully transmitted or the I²C Slave Address was recognized.
←	Transmission error (in I²C protocol referred to as NAK)	-	0x2D	Notifies the AT interface that data transmission failed or the I²C Slave Address was not recognized.

18.7.1.1 Structure of Messages on the I²C Bus

Read Requests, Write Requests and Responses are handled in separate frames transmitted one after the other. This is because the I²C bus has only two bus lines, I2CDAT for the serial data and I2CCLK for the serial clock. After each Read or Write Request sent to a connected I²C device, wait for the Response before sending the next Request. This section describes the elements of Read Request, Write Request and Response frames.

Notation of protocol data (except Message ID) and user data in ASCII mode:

- Hex (0...9, a...f, A...F)
- Without "0x" (for example 0x01 → 01)
- Each hex value consists of 2 characters (1 → 01)
- Without delimiters such as comma, semicolon, space etc. (for example 0xAE 0x01 → AE0145)

Notation of protocol data (except Message ID) and user data in Transparent mode:

- Length of data as 16 bit value, MSB first
- Raw data 8 bit clean

Message ID:

- The Message ID identifies different messages. It is only relevant on protocol level (between AT interface and I²C device driver), i.e. it is not sent to the I²C slave device.
- Characters: only 0...9, A...Z, a...z.
- Length of the Message-ID: only 1 character.

Slave Address:

- Each Read or Write Request contains a 7-bit I²C Slave Address that identifies each single device connected to the bus. The 8th bit of this byte is the LSB that determines the data direction:
  If the LSB is "0" the I²C master will write information to the selected slave = Write Request.
  If the LSB is "1" the I²C master will read information sent from the slave = Read Request.

Table 18.5: Structure of Request and Response frames on the I²C bus in ASCII mode

Frame	Format
Write Request	*<ID SlaveAddress Data>* *ID:* Message ID given as 1 character *SlaveAddress:* 2 characters, LSB = 0 *Data:* n bytes, each a 2-character ASCII value
Read Request	*<ID SlaveAddress ReadLength>* *ID:* Message ID given as 1 character *SlaveAddress:* 2 characters, LSB = 1 *ReadLength:* Number of bytes to be read
Response Write OK Read of x bytes OK NAK if Read or Write transmission fails Protocol error near x[th] byte	 *{ID + }* *{ID + Data}* *{ID - 0}* *{ID ! xxxx}*

Table 18.6: Structure of Request and Response frames on the I²C bus in Transparent mode

Frame	Format
Write Request	*'[', ID, LenHi, LenLo, SlaveAddress, DataByte1, DataByte2, ..., ']'* *ID:* Message ID given as 1 character *LenHi, LenLo:* Hi byte and Lo byte of the 16 bit data length stating number of Slave Address bytes + number of data bytes contained in Write Request *SlaveAddress:* 2 bytes, LSB = 0 *DataByte... :* n bytes
Write Request with Repeated Start condition	*'[', ID, LenHi, LenLo, SlaveAddress, DataByte1, DataByte2, ..., '*', LenHi, LenLo, SlaveAddress, DataByte1, DataByte2, ..., ']'* **:* Allows to issue more Write Requests without the need to send close characters, start characters and Message IDs in between.
Read Request	*'[', ID, LenHi, LenLo, SlaveAddress ReadLength ']'* *ID:* Message ID given as 1 character *LenHi, LenLo:* Hi byte and Lo byte of the 16 bit data length stating number of Slave Address bytes + ReadLength bytes contained in Read Request *SlaveAddress:* 2 bytes, LSB = 1 *ReadLength:* 16 bits stating the number of bytes to be read in Response
Response	
Write OK	*{ID +}*
Read of x bytes OK	*'[', ID, '+', '$', LenHi, LenLo, DataByte1, DataByte2, ..., ']'* *ID:* Message ID given as 1 character *$:* Length indicator for the following 2 bytes *LenHi, LenLo:* Hi byte and lo byte of the 16 bit data length *DataByte... :* n bytes
NAK if Read or Write transmission fails	*{ID - 0}*
Protocol error near x^{th} byte	*{ID ! xxxx}*

18.7.2 Example: Using I²C Bus

This example shows how to activate the I²C interface and explains the used parameters.

AT^SSPI=0010,0000 CONNECT	The first group of characters forms the <basicConfiguration>, where the first "0" sets I²C, the second "0" is the internal port, the digit "1" sets 400 kbps bit rate on the I²C bus, and the next "0" selects the protocol to be used both for ASCII mode and Transparent mode. This is followed by a comma and the value "0000" for <StopStartPeriod>. Note: If omitted all above parameters are assumed by default. Therefore, instead of AT^SSPI=0010,0000 it is sufficient to only enter AT^SSPI= The CONNECT response shows that the module has entered data mode and is ready to transmit data.

The following example shows how to send a Write Request and a Read Request in ASCII mode.

AT^SSPI=0010,0000	Start the I²C interface. See first example for parameter description.
CONNECT	The ME is in data mode, ready to send and receive data in ASCII mode or Transparent mode.
<aAE000102030405060708090A0B0C0D0E0F>	Request frame in ASCII mode, where a = ID, AE = Slave Address and Write Request. User data bytes are given as 2 character ASCII values.
{a+}	Response frame, where a = ID.
<bAF0010>	Request frame, where b = ID, AF = Slave Address and Read Request, 0010 = number of expected bytes.
{b+000102030405060708090A0B0C0D0E0F}	Response frame, where b = ID.
#	To quit data mode and return to command mode enter the Close character # or the escape sequence +++.
OK	The response OK confirms that the ME is back to command mode and ready to accept any AT commands.

The following example shows how to send a Write Request and a Read Request in Transparent mode. The example column on the left visualizes only commands and responses handled on the AT interface, while the transferred Write and Read Requests are shown as C code in the comment column on the right.

`AT^SSPI=0010,0000`	Start the I²C interface. See first example for parameter description.
`CONNECT`	The ME is in data mode, ready to send and receive data in ASCII mode or Transparent mode.

	Send a Write Request frame in Transparent mode, here given as C code:
	int I2CData[]={0x5B 0x61 0x00 0x12 0x00 0xAE 0x00 0x01 0x02 0x03 0x04 0x05 0x06 0x07 0x08 0x09 0x0A 0x0B 0x0C 0x0D 0x0E 0x0F 0x5D};
	for(i=0;i<sizeof(I2CData);i++)
	{
	putchar(I2CData[i]);
	}

	Content of the Write Request: 0x5B = start character (from this point, all responses with data body will be sent in Transparent mode) 0x61 = ID, 0x00 0x12 = 16 bits stating number of Slave Address bytes + number of data bytes of this Request, 0x00 0xAE = 16 bit Slave Address including LSB 0 for Write Request, Data bytes, 0x5D: Stop character of Write Request.
`{a+}`	Response frame without user data, therefore sent as ASCII. a=ID (equals 0x61 in Hex format).

	Send a Read Request frame, here given as C code:
	int I2CData[]={0x5B 0x62 0x00 0x04 0x00 0xAF 0x00 0x0A 0x5D};
	for(i=0;i<sizeof(I2CData);i++)
	{
	putchar(I2CData[i]);
	}

	Content of the Read Request: 0x5B = start character, 0x62 = ID, 0x00 0x04 = 16 bits stating number of Slave Address bytes + number of data bytes of this Request, 0x00 0xAF = 16 bit Slave Address including LSB 1 for Read Request, 0x00 0x0A = ReadLength = 16 bits stating the number of bytes to be read in Response. 0x5D: Stop character of Read Request.
`[b+$00010203040506070809]`	Response frame with data body transmitted in Transparent mode, where b = ID (equals 0x62 in Hex format).
`+++`	Send escape sequence to quit data mode and return to command mode.
`OK`	The OK response confirms that the ME is back to command mode and ready to accept any AT commands.

18.8 AT^SWDAC PWM Signal Configuration for DAC

The AT^SWDAC controls the PWM (Pulse Width Modulation) signals generated by means of the PWM_OUT pins of the BGS2-E Module.
First PWM channel of BGS2-E Module: PWM_OUT1 (GPIO 7).
Second PWM channel of BGS2-E Module: PWM_OUT2 (GPIO 6).

Syntax

Test Command

AT^SWDAC=?

Response(s)

^SWDAC: (list of supported <ch>s), (list of supported <dc>s), (list of supported <oc>s), (list of supported <fq>s)
OK

Read Command

AT^SWDAC?

Response(s)

Current settings of first and second PWM channel:
^SWDAC: <ch>, <dc>, <oc>, <fq>
^SWDAC: <ch>, <dc>, <oc>, <fq>
OK
ERROR
+CME ERROR: <err>

Write Command

AT^SWDAC=<ch>, <dc>[, <oc>[, <fq>]]

Response(s)

OK
ERROR
+CME ERROR: <err>

PIN	ASC0	ASC1	MUX1	MUX2	MUX3		Last
-	+	+	+	+	+	-	-

Parameter Description

<ch>(num)

Select PWM channel

0	First PWM channel (PWM_OUT1 (GPIO 7) at BGS2-E Module.)
1	Second PWM channel (PWM_OUT2 (GPIO 6) at BGS2-E Module.)

<dc>(num)

Duty cycle in percentage steps

0...100

<oc>(num)	
Open or close DAC	
0	Close DAC
1	Open DAC

<fq>(num)	
PWM frequency	
0	300 Hz
1	1000 Hz
2	8,125 Hz
3	16,250 Hz
4	32,500 Hz
5	65,000 Hz

Note

- Possible PWM_OUT pin configuration defined in Section 19.1.1, GPIO configuration table.

Example

This example shows how to open the PWM_OUT1 output and change the duty cycle while using the same frequency.

AT^SWDAC=0,50,1,2	Initial opening of PWM_OUT1, while setting PWM signal to 8,125 Hz at 50% duty cycle.
OK	
AT^SWDAC=0,75	Change duty cycle of the open PWM_OUT1 output.
OK	
AT^SWDAC=0,80	Change duty cycle of the open PWM_OUT1 output.
OK	
AT^SWDAC=0,0,0	Close PWM_OUT1.
OK	

19. GPIO Commands

This chapter describes the AT commands needed to access and configure the GPIO pins of the BGS2-E.

Please also refer to [2] for electrical specifications of the GPIOs.

19.1 AT^SPIO General Purpose IO Driver Open/Close

The AT^SPIO write command opens and closes the general purpose IO driver. The command must be executed before any other GPIO command can be used. After closing the driver, all pins used (i.e. opened) will be put into high impedance state (inputs) with no internal pull up or down.

The command does not reserve any general purpose IO pin, only the drivers required for GPIO pin management will be loaded.

Syntax

Test Command

```
AT^SPIO=?
```

Response(s)

```
^SPIO:(list of supported <mode>s)
OK
```

Write Command

```
AT^SPIO=<mode>
```

Response(s)

```
OK
ERROR
+CME ERROR: <err>
```

PIN	ASC0	ASC1	MUX1	MUX2	MUX3		Last
-	+	+	+	+	+	-	-

Parameter Description

<mode>(num)	
0	Close General purpose IO driver
1	Open General purpose IO driver

Notes

- Unused GPIO pins have an internal pull up resistor. Do not connect them or connect high level.
- GPIO10 pin is open drain. Therefore an external pull up resistor is needed for high level.

19.1.1 GPIO configuration table

Some GPIO lines are shared with other interfaces, such as I²C, PWM (Pulse Width Modulation) interfaces and a status LED. The following table shows the configuration variants. All variants are mutually exclusive, i.e. a pin configured as GPIO is locked for alternative use and vice versa.

GPIO pin	GPIO handler	I2C	PWM/DAC	Status LED
GPIO1	yes	no	no	no
GPIO2	yes	no	no	no
GPIO3	yes	no	no	no
GPIO4	yes	no	no	no
GPIO5	yes	no	no	yes
GPIO6	yes	no	yes	no
GPIO7	yes	no	yes	no
GPIO8	yes	no	no	no
GPIO9	yes	yes	no	no
GPIO10	yes	yes	no	no

19.2 AT^SCPIN Pin Configuration

The AT^SCPIN write command serves to add (or remove) and configure pins. The electrical specifications of all configurable pins can be found in [2].

Syntax

Test Command

AT^SCPIN=?

Response(s)

^SCPIN: (list of supported <mode>s), (list of supported <pin_id>s), (list of supported <direction>s), (list of supported <startValue>s)
OK

Write Command

AT^SCPIN=<mode>, <pin_id>, <direction>[, <startValue>]

Response(s)

OK
ERROR
+CME ERROR: <err>

PIN	ASC0	ASC1	MUX1	MUX2	MUX3		Last
-	+	+	+	+	+	-	-

Parameter Description

<mode>(num)

0	Close pin
1	Open pin

<pin_id>(num)

Pin identifier

0	GPIO1
1	GPIO2
2	GPIO3
3	GPIO4
4	GPIO5
5	GPIO6
6	GPIO7
7	GPIO8
8	GPIO9
9	GPIO10

<direction>(num)

Parameter <direction> is mandatory when opening a pin, but can be omitted when closing a pin

0	Input
1	Output

`<startValue>`(num)

Can be set only for outputs.

[0]	Low
1	High

Notes

- Possible GPIO pin configuration defined in Section 19.1.1, GPIO configuration table.
- For closing a pin with the write command (`<mode>`=0), the parameter `<direction>` is not needed.
- Before changing the configuration of a pin be sure to close the pin.

19.3 AT^SGIO Get IO state of a specified pin

Syntax

Test Command

```
AT^SGIO=?
```

Response(s)

```
^SGIO:(list of supported <io_id>s)
OK
```

Write Command

```
AT^SGIO=<io_id>
```

Response(s)

```
^SGIO: <value>
OK
ERROR
+CME ERROR: <err>
```

PIN	ASC0	ASC1	MUX1	MUX2	MUX3		Last
-	+	+	+	+	+	-	-

Parameter Description

`<io_id>`(num)

This is an already configured `<pin_id>`.

`<value>`(num)

State read on this `<io_id>`.

0	Low for `<pin_id>`
1	High for `<pin_id>`

Note

- Possible GPIO pin configuration defined in Section 19.1.1, GPIO configuration table.

19.4 AT^SSIO Set IO state of a specified pin

Syntax

Test Command

`AT^SSIO=?`

Response(s)

`^SSIO:` (list of supported `<io_id>`s), (list of supported `<value>`s)
`OK`

Write Command

`AT^SSIO=<io_id>, <value>`

Response(s)

`OK`
`ERROR`
`+CME ERROR: <err>`

PIN	ASC0	ASC1	MUX1	MUX2	MUX3		Last
-	+	+	+	+	+	-	-

Parameter Description

`<io_id>`(num)

This is an already configured `<pin_id>`.

`<value>`(num)

State to be set for this `<io_id>`.

0	Low for `<pin_id>`
1	High for `<pin_id>`

Note

- Possible GPIO pin configuration defined in Section 19.1.1, GPIO configuration table.

20. Miscellaneous Commands

The AT Commands described in this chapter are related to various areas.

20.1 A/ Repeat Previous Command Line

Repeat previous AT command line.
In general, after beginning a command line with character "a" or "A" a second character "t", "T" or "/" has to follow. "/" acts as line terminating character. In case of using a wrong second character, it is necessary to start again with character "a" or "A".

Syntax

Exec Command
A/
Response(s)

PIN	ASC0	ASC1	MUX1	MUX2	MUX3		Last
-	+	+	+	+	+	-	-

Reference(s)
V.250

20.2 ATS3 Command Line Termination

ATS3 determines the character recognized by the BGS2-E to terminate an incoming command line. It is also generated for result codes and information text, along with character value set via ATS4.

Syntax

Read Command

```
ATS3?
```

Response(s)

```
<n>
OK
```

Write Command

```
ATS3=<n>
```

Response(s)

```
OK
ERROR
```

PIN	ASC0	ASC1	MUX1	MUX2	MUX3		Last
-	+	+	+	+	+	-	-

Reference(s)

V.250

Parameter Description

<n>(num)(&W)(&V)

Command line termination character.
It is not recommended to change this value.

000...13(&F)...127

Note

- If changing this setting the new value has no effect for "^SHUTDOWN" URC.

20.3 ATS4 Response Formatting

ATS4 determines the character generated by the BGS2-E for result code and information text, along with the command line termination character set via ATS3.

Syntax

Read Command

```
ATS4?
```

Response(s)

```
<n>
OK
```

Write Command

```
ATS4=<n>
```

Response(s)

```
OK
ERROR
```

PIN	ASC0	ASC1	MUX1	MUX2	MUX3		Last
-	+	+	+	+	+	-	-

Reference(s)

V.250

Parameter Description

<n>(num)(&W)(&V)

Response formatting character.
It is not recommended to change this value.

000...10(&F)...127

Note

- If changing this setting the new value has no effect for "^SHUTDOWN" URC.

20.4 ATS5 Command Line Editing

ATS5 determines the character value used by the BGS2-E to delete the immediately preceding character from the AT command line (i.e. equates backspace key).

Syntax

Read Command

```
ATS5?
```

Response(s)

```
<n>
OK
```

Write Command

```
ATS5=<n>
```

Response(s)

```
OK
ERROR
```

PIN	ASC0	ASC1	MUX1	MUX2	MUX3		Last
-	+	+	+	+	+	-	-

Reference(s)

V.250

Parameter Description

<n>(num)(&W)(&V)

Command line editing character.
It is not recommended to change this value.

000...8(&F)...127

20.5 AT^SFDL Firmware Download

AT^SFDL allows the application manufacturer to download BGS2-E firmware into the ME by starting the download process on a customer-designed update tool.

For this purpose the BGS2-E firmware update file must be available in *.USF format. This file is part of each product specific firmware package supplied by Cinterion Wireless Modules GmbH. The firmware file consists of records to be transferred one by one from the update tool to the ME.

This manual only describes the syntax of the AT^SFDL command. Details on technical requirements and steps to prepare the host application for this download solution can be found in "Application Note 16: Updating BGS2-E Firmware" [9]. An example for developing an appropriate update tool is included.

The command causes the ME to reset and enter the firmware download mode (this may take some milliseconds). After entering the download mode the ME sends the start pattern HEX 0x01 ("ANSWER_OK") to the update tool to indicate its ready state. Next, the update tool shall start to send the records of the firmware file. Each record received by the ME is acknowledged to the update tool. Once all records are successfully received, the ME shuts down automatically.

If BGS2-E is switched on although it has no valid firmware installed, it waits 60s for the AT^SFDL command (or for another download method to be started). If neither the AT^SFDL command nor equivalent characters from another download method are received the ME switches off after a 60s timeout.

If a valid firmware is still installed, but the AT^SFDL command is issued without sending any firmware afterwards the ME will stay in ready state. In this case it must be switched off.

Syntax

Test Command

```
AT^SFDL=?
```

Response(s)

```
OK
```

Exec Command

```
AT^SFDL
```

Response(s)

```
OK
0x01
```

PIN	ASC0	ASC1	MUX1	MUX2	MUX3	🔔	Last
-	+	+	-	-	-	+	+

21. Appendix

21.1 Restricted access to SIM data after SIM PIN authentication

The following commands can be used only after data from the SIM have been read successfully for the first time. Reading starts after successful SIM authentication has been performed, and may take up to 30 seconds depending on the SIM used. While the read process is in progress, an attempt to use any of the following commands will result in "+CME Error: 14" (SIM busy).

We recommend to take advantage of the "^SSIM READY" URC. If enabled with AT^SSET, this URC acknowledges to the user that SIM data is accessible after SIM PIN authentication. It will be delivered once the ME has completed reading data from the SIM card.

ø ... AT Command not available
- ... AT command accessible immediately after PIN entry has returned OK
+ ... AT command fully accessible after SIM PIN authentication has been completed

AT Command	Exec	Test	Read	Write
AT+CMGL	+	-	ø	+
AT^SMGL	+	-	ø	+
AT+CMGR	ø	-	ø	+
AT^SMGR	ø	-	ø	+
AT+CSCA	ø	-	+	-
AT^SSTGI	ø	+	+	+
AT^SSTR	ø	+	+	+
AT+CPBR	ø	+	ø	+
AT+CPBW	ø	+	ø	+
AT+CPBS	ø	+	+	+
AT^SDLD	+	+	ø	ø
AT^SPBC	ø	+	ø	+
AT^SPBD	ø	+	ø	+
AT^SPBG	ø	+	ø	+
AT^SPBS	ø	+	ø	+
ATD><mem><n>	+	ø	ø	ø

21.2 Star-Hash (*#) Network Commands

The following command strings can be sent to the network via ATD and have to be terminated with a semicolon. The command strings are defined with GSM 2.30 [16].

Table 21.1: Star-Hash (*#) Command Overview

Star-Hash Code	Functionality	Response, also refer to Table 21.3
Phone Security		
*#06#	Query IMEI	<IMEI> OK
**04[2]*oldPin[2]*newPin[2]*new-Pin[2]#	Change SIM pwd	+CME ERROR: <err> / OK
**05[2]*unblKey[2]*newPin[2]*new-Pin[2]#	Change/Unblocking SIM pwd	+CME ERROR: <err> / OK
*#0003*MasterPhoneCode#	Unlock "PS" lock with Master Phone Code	+CME ERROR: <err> / OK
[*]03[ZZ]*oldPw*newPw*newPw#	Registration of net password	+CME ERROR: <err> / OK
Phone number presentation		
*#30#	Check status of CLIP (Calling Line Identification Presentation)	+CLIP : <n>,<m> OK (see AT+CLIP)
*#31#	Check status of CLIR (Calling Line Identification Restriction)	+CLIR : <n>,<m> OK (see AT+CLIR)
*31#<Phonenumber>[;]	Suppress CLIR	(see AT+CLIR)
#31#<Phonenumber>[;]	Activate CLIR	(see AT+CLIR)
*#76#	Check status of COLP (Connected Line Identification Presentation)	+COLP : <n>,<m> OK (see: AT+COLP)
*#77#	Check status of COLR (Connected Line Identification Restriction)	+COLR : 0,<m> OK (where <m> = active or not active)
Call forwarding		
(choice of *,#,*#,**,##)21*DN*BS#	Act/deact/int/reg/eras CFU	^SCCFC : <reason>, <status>, <class> [,...] like +CCFC *) (see: AT+CCFC)
(choice of *,#,*#,**,##)67*DN*BS#	Act/deact/int/reg/eras CF busy	see above
(choice of *,#,*#,**,##)61*DN*BS*T#	Act/deact/int/reg/eras CF no reply	see above
(choice of *,#,*#,**,##)62*DN*BS#	Act/deact/int/reg/eras CF no reach	see above
(choice of *,#,*#,**,##)002*DN*BS*T#	Act/deact/int/reg/eras CF all	see above
(choice of *,#,*#,**,##)004*DN*BS*T#	Act/deact/int/reg/eras CF all cond.	see above
Call waiting		
(choice of *,#,*#)43*BS#	Activation/deactivation/int WAIT	+CCWA : <status>, <class> [,...] like +CCWA *) (see: AT+CCWA)

Star-Hash Code	Functionality	Response, also refer to Table 21.3
Call barring		
(choice of *,#,*#)33*Pw*BS#	Act/deact/int BAOC	^SCLCK : <fac>, <status>, <class> [, ...] like +CLCK *) (Refer to AT+CLCK)
(choice of *,#,*#)331*Pw*BS#	Act/deact/int BAOIC	see above
(choice of *,#,*#)332*Pw*BS#	Act/deact/int BAOIC exc.home	see above
(choice of *,#,*#)35*Pw*BS#	Act/deact/int. BAIC	see above
(choice of *,#,*#)351*Pw*BS#	Act/deact/int BAIC roaming	see above
#330*Pw*BS#	Deact. All Barring Services	see above
#333*Pw*BS#	Deact. All Outg.Barring Services	see above
#353*Pw*BS#	Deact. All Inc.Barring Services	see above
Call Hold / Multiparty		
C[C] in call	Call hold and multiparty	+CME ERROR: <err> / OK
USSD messages		
[C]...[C]#	Send USSD message	+CME ERROR: <err> / OK
C[C] (excluded 1[C])	Send USSD message	+CME ERROR: <err> / OK

*) Notes on ^SCCFC, +CCWA, ^SCLCK: The output depends on the affected basic service of the Star-Hash code. One line will be output for every tele- or bearer service coded in basic service code BS.
^SCCFC and ^SCLCK are modified by giving an additional <reason> or <fac> in front of the regular output string generated by the standard commands +CCFC and +CLCK.

Table 21.2: Abbreviations of Codes and Parameters used in Table 21.1

Abbreviation	Meaning	Value
ZZ	Type of supplementary services: Barring services All services	 330 Not specified
DN	Dialing number	String of digits 0-9
BS	Basic service equivalent to parameter class: Voice FAX SMS SMS+FAX Data circuit asynchron Data circuit synchron dedicated PAD access dedicated Packet access Data circuit asynchron+PAD Data circuit synchron+Packet Data circuit asynchron+synchron+Packet+PAD All Services	 11 13 16 12 25 24 27 26 21 22 20 --
T	Time in seconds	In contrast to AT+CCFC, parameter T has no default value. If T is not specified, an operator defined default or the last known value may be used, depending on the network operator.

Abbreviation	Meaning	Value
PW	Password	--
C	Character of TE character set (e.g. asterisk, hash or digit in case of USSD, or digits in case of held calls or multiparty calls)	--

Table 21.3: Star-Hash Command Response Parameters

Parameter	Meaning
<m>	Mode: 0 = not active, 1 = active
<n>	Unsolicited result code: 0 = presentation disabled, 1 = presentation enabled
<status>	Status: 0 = not active, 1 = active
<class>	Represents BS = basic service, refer to AT+CCFC, AT+CLCK
<fac>	Facility lock, refer to AT+CLCK
<reason>	Call forwarding reason

For exact specification of format and parameters for Star-Hash commands refer to GSM 02.04, Table 3.2 [15] and GSM 02.30, Annex C [16].

Table 21.4: Star-Hash Commands for Supplementary Services

Star-Hash Code	Abbreviations in Table 21.1	Functionality
*	act	Activate (except for CLIR, see list above)
**	reg	Register and activate
*#	int	Check status (interrogate)
#	deact	Deactivate (except for CLIR, see list above)
##	eras	Unregister and deactivate

21.3 Available AT Commands and Dependency on SIM PIN

ø ... Command not available
- ... Command does not require PIN1
+ ... Command requires PIN1
± ... Command sometimes requires PIN1

Table 21.5: Available AT Commands and Dependency on SIM PIN

AT Command	Exec	Test	Read	Write
Configuration Commands				
AT&F	-	ø	ø	ø
AT&V	-	ø	ø	ø
AT&W	-	ø	ø	ø
ATQ	-	ø	ø	ø
ATV	-	ø	ø	ø
ATX	-	ø	ø	ø
ATZ	-	ø	ø	ø
AT+CFUN	ø	-	-	-
AT^SMSO	-	-	ø	ø
AT+GCAP	-	-	ø	ø
AT+CMEE	ø	-	-	-
AT+CSCS	ø	-	-	-
AT^SCFG	ø	-	-	-
AT^SM20	ø	-	-	-
Status Control Commands				
AT+CMER	ø	-	-	-
AT+CIND	ø	-	-	-
AT^SIND	ø	-	-	-
AT+CEER	+	+	ø	ø
ATS18	ø	ø	-	-
AT+CPAS	-	-	ø	ø
AT+WS46	ø	-	-	-
Serial Interface Control Commands				
AT\Q	-	ø	ø	ø
AT&C	-	ø	ø	ø
AT&D	-	ø	ø	ø
AT&S	-	ø	ø	ø
ATE	-	ø	ø	ø
AT+ILRR	ø	+	+	+
AT+IPR	ø	-	-	-
AT+CMUX	ø	-	-	-

AT Command	Exec	Test	Read	Write
Security Commands				
AT+CPIN	ø	-	-	-
AT+CPIN2	ø	+	+	+
AT^SPIC	-	-	-	-
AT+CLCK	ø	+	ø	+
AT^SLCK	ø	+	ø	+
AT+CPWD	ø	+	ø	+
AT^SPWD	ø	+	ø	+
Identification Commands				
ATI	-	ø	ø	ø
AT+CGMI	-	-	ø	ø
AT+GMI	-	-	ø	ø
AT+CGMM	-	-	ø	ø
AT+GMM	-	-	ø	ø
AT+CGMR	-	-	ø	ø
AT+GMR	-	-	ø	ø
AT+CGSN	-	-	ø	ø
AT+GSN	-	-	ø	ø
AT+CIMI	+	+	ø	ø
Call related Commands				
ATA	+	ø	ø	ø
ATD	±	ø	ø	ø
ATD><mem><n>	+	ø	ø	ø
ATD><n>	+	ø	ø	ø
ATD><str>	+	ø	ø	ø
ATDI	+	ø	ø	ø
ATDL	+	ø	ø	ø
ATH	-	ø	ø	ø
AT+CHUP	-	-	ø	ø
AT^SHUP	ø	+	ø	+
ATS0	ø	ø	-	+
ATS6	ø	ø	-	-
ATS7	ø	ø	-	-
ATS8	ø	ø	-	-
ATS10	ø	ø	-	-
ATO	-	ø	ø	ø
+++	-	ø	ø	ø
AT+CBST	ø	-	-	-
AT+CRLP	ø	-	-	-
AT+CLCC	+	+	ø	ø

AT Command	Exec	Test	Read	Write
AT^SLCC	+	+	+	+
AT+CR	ø	+	+	+
AT+CRC	ø	-	-	-
AT+CSNS	ø	-	-	-
AT^SCNI	+	+	ø	ø
AT^SLCD	+	+	ø	ø
AT^STCD	+	+	ø	ø
ATP	-	ø	ø	ø
ATT	-	ø	ø	ø
ATS2	ø	ø	-	-
Network Service Commands				
AT+COPN	+	+	ø	ø
AT+COPS	ø	-	±	±
AT^SOPS	ø	+	ø	ø
AT^SRPN	ø	-	-	-
AT+CREG	ø	-	-	-
AT+CSQ	-	-	ø	ø
AT^SMONC	+	+	ø	ø
AT^SMOND	+	+	ø	ø
AT^MONI	-	-	ø	-
AT^MONP	-	-	ø	-
AT^SMONG	+	+	ø	+
AT^SALS	ø	+	+	+
AT^SHOM	+	+	ø	ø
AT^SPLM	+	+	ø	ø
AT+CPOL	ø	+	+	+
AT^SPLR	ø	+	ø	+
AT^SPLW	ø	+	ø	+
AT^SPCL	ø	-	-	-
Supplementary Service Commands				
AT+CACM	ø	+	+	+
AT^SACM	+	+	ø	+
AT+CAMM	ø	+	+	+
AT+CAOC	+	+	+	+
AT+CCUG	ø	+	+	+
AT+CCFC	ø	+	ø	+
AT+CCWA	ø	+	+	+
AT+CHLD	ø	+	ø	+
AT+CLIP	ø	-	+	-
AT+CLIR	ø	+	+	+

AT Command	Exec	Test	Read	Write
AT+COLP	Ø	+	+	+
AT+CPUC	Ø	+	+	+
AT+CSSN	Ø	-	-	-
AT+CUSD	Ø	+	+	+
Internet Service Commands				
AT^SICS	Ø	-	-	-
AT^SICI	Ø	-	-	-
AT^SISS	Ø	-	-	-
AT^SISI	Ø	-	-	-
AT^SISO	Ø	-	-	+
AT^SISC	Ø	-	Ø	+
AT^SISR	Ø	-	Ø	+
AT^SISW	Ø	-	Ø	+
AT^SIST	Ø	-	Ø	-
AT^SISE	Ø	-	Ø	-
GPRS Commands				
AT+CGACT	Ø	+	+	+
AT+CGANS	Ø	+	Ø	+
AT+CGATT	Ø	+	+	+
AT+CGAUTO	Ø	+	+	+
AT+CGDATA	Ø	+	Ø	+
AT+CGDCONT	Ø	+	+	+
AT+CGEQMIN	Ø	+	+	+
AT+CGEQREQ	Ø	+	+	+
AT+CGEREP	Ø	+	+	+
AT+CGPADDR	Ø	+	Ø	+
AT+CGQMIN	Ø	+	+	+
AT+CGQREQ	Ø	+	+	+
AT+CGREG	Ø	+	+	+
AT+CGSMS	Ø	+	+	+
AT^SGAUTH	Ø	-	-	-
AT^SGCONF	Ø	-	-	-
ATA	+	Ø	Ø	Ø
ATD*99#	+	Ø	Ø	Ø
ATD*98#	+	Ø	Ø	Ø
ATH	+	Ø	Ø	Ø
ATS0	Ø	Ø	-	+
FAX Commands				
AT+FBADLIN	Ø	Ø	-	-
AT+FBADMUL	Ø	Ø	-	-

AT Command	Exec	Test	Read	Write
AT+FBOR	Ø	-	-	-
AT+FCIG	Ø	-	-	-
AT+FCLASS	Ø	-	-	-
AT+FCQ	Ø	-	-	-
AT+FCR	Ø	Ø	Ø	-
AT+FDCC	Ø	-	-	-
AT+FDFFC	Ø	-	-	-
AT+FDIS	Ø	-	-	-
AT+FDR	-	Ø	Ø	Ø
AT+FDT	-	Ø	Ø	-
AT+FET	Ø	Ø	Ø	-
AT+FK	-	Ø	Ø	Ø
AT+FLID	Ø	-	-	-
AT+FMDL	Ø	Ø	-	Ø
AT+FMFR	Ø	Ø	-	Ø
AT+FOPT	Ø	Ø	Ø	-
AT+FPHCTO	Ø	Ø	-	-
AT+FREV	Ø	Ø	-	Ø
AT+FRH	Ø	-	Ø	-
AT+FRM	Ø	-	Ø	-
AT+FRS	Ø	Ø	Ø	-
AT+FTH	Ø	-	Ø	-
AT+FTM	Ø	-	Ø	-
AT+FTS	Ø	Ø	Ø	-
AT+FVRFC	Ø	-	-	-
Short Message Service (SMS) Commands				
AT+CMGC	Ø	+	Ø	+
AT+CMGD	Ø	+	Ø	+
AT+CMGF	Ø	-	-	-
AT+CMGL	+	+	Ø	+
AT+CMGR	Ø	+	Ø	+
AT+CMGS	Ø	+	Ø	+
AT+CMGW	+	+	Ø	+
AT+CMSS	Ø	+	Ø	+
AT+CNMA	+	+	Ø	+
AT+CNMI	Ø	+	+	+
AT+CPMS	Ø	+	+	+
AT+CSCA	Ø	+	+	+
AT+CSCB	Ø	+	+	+
AT+CSDH	Ø	+	+	+
AT+CSMP	Ø	+	+	+

AT Command	Exec	Test	Read	Write
AT+CSMS	ø	+	+	+
AT^SLMS	+	+	ø	ø
AT^SMGL	+	+	ø	+
AT^SMGO	ø	+	+	+
AT^SMGR	ø	+	ø	+
AT^SSCONF	ø	-	-	-
AT^SSDA	ø	-	-	-
AT^SSMSS	ø	-	-	-
SIM related Commands				
AT+CRSM	ø	-	ø	-
AT+CSIM	ø	-	ø	-
AT+CXXCID	-	-	ø	ø
AT^SCID	-	-	ø	ø
AT^SCKS	ø	-	-	-
AT^SSET	ø	-	-	-
AT^SXSM	ø	+	ø	+
SIM Application Toolkit (SAT) Commands				
AT^SSTA	ø	-	-	-
AT^SSTGI	ø	-	-	-
AT^SSTGI	ø	ø	ø	-
AT^SSTGI	ø	ø	ø	-
AT^SSTGI	ø	ø	ø	-
AT^SSTGI	ø	ø	ø	-
AT^SSTGI	ø	ø	ø	-
AT^SSTGI	ø	ø	ø	-
AT^SSTGI	ø	ø	ø	-
AT^SSTGI	ø	ø	ø	-
AT^SSTGI	ø	ø	ø	-
AT^SSTGI	ø	ø	ø	-
AT^SSTGI	ø	ø	ø	-
AT^SSTGI	ø	ø	ø	-
AT^SSTGI	ø	ø	ø	-
AT^SSTGI	ø	ø	ø	-
AT^SSTGI	ø	ø	ø	-
AT^SSTGI	ø	ø	ø	-
AT^SSTR	ø	-	-	-
AT^SSTR	ø	ø	ø	-
AT^SSTR	ø	ø	ø	-
AT^SSTR	ø	ø	ø	-
AT^SSTR	ø	ø	ø	-

AT Command	Exec	Test	Read	Write
AT^SSTR	Ø	Ø	Ø	-
AT^SSTR	Ø	Ø	Ø	-
AT^SSTR	Ø	Ø	Ø	-
AT^SSTR	Ø	Ø	Ø	-
AT^SSTR	Ø	Ø	Ø	-
AT^SSTR	Ø	Ø	Ø	-
AT^SSTR	Ø	Ø	Ø	-
AT^SSTR	Ø	Ø	Ø	-
AT^SSTR	Ø	Ø	Ø	-
AT^SSTR	Ø	Ø	Ø	-
AT^SSTR	Ø	Ø	Ø	-
AT^SSTR	Ø	Ø	Ø	-
AT^SSTR	Ø	Ø	Ø	-
AT^SSTR	Ø	Ø	Ø	-
AT^SSTR	Ø	Ø	Ø	-
AT^SSTR	Ø	Ø	Ø	-
AT^SSTR	Ø	Ø	Ø	-
Phonebook Commands				
AT+CPBR	Ø	+	Ø	+
AT+CPBS	Ø	+	+	+
AT+CPBW	Ø	+	Ø	+
AT^SPBC	Ø	+	Ø	+
AT^SPBD	Ø	+	Ø	+
AT^SPBG	Ø	+	Ø	+
AT^SPBS	Ø	+	Ø	+
AT+CNUM	+	+	Ø	Ø
AT^SDLD	+	+	Ø	Ø
Audio Commands				
ATL	-	Ø	Ø	Ø
ATM	-	Ø	Ø	Ø
AT+CLVL	Ø	-	-	-
AT+CMUT	Ø	-	-	-
AT+VTD	Ø	-	-	-
AT+VTS	Ø	-	Ø	-
AT^SNFA	Ø	-	-	-
AT^SNFD	-	-	Ø	Ø
AT^SNFG	Ø	-	Ø	-
AT^SNFI	Ø	-	-	-
AT^SNFM	Ø	-	-	-

AT Command	Exec	Test	Read	Write
AT^SNFO	Ø	-	-	-
AT^SNFPT	Ø	-	-	-
AT^SNFS	Ø	-	-	-
AT^SNFTTY	Ø	-	-	-
AT^SNFV	Ø	-	-	-
AT^SNFW	-	-	Ø	Ø
AT^SRTC	-	-	-	-
Hardware related Commands				
AT+CCLK	Ø	-	-	-
AT+CALA	Ø	-	-	-
AT^SBV	-	-	Ø	Ø
AT^SSYNC	Ø	-	-	-
AT^SCTM	Ø	-	-	-
AT^SRADC	Ø	-	-	-
AT^SSPI	Ø	-	-	-
AT^SWDAC	Ø	-	-	-
GPIO Commands				
AT^SPIO	Ø	-	Ø	-
AT^SCPIN	Ø	-	Ø	-
AT^SGIO	Ø	-	Ø	-
AT^SSIO	Ø	-	Ø	-
Miscellaneous Commands				
A/	-	Ø	Ø	Ø
ATS3	Ø	Ø	-	-
ATS4	Ø	Ø	-	-
ATS5	Ø	Ø	-	-
AT^SFDL	-	-	Ø	Ø

21.4 Availability of AT Commands Depending on Operating Mode of ME

- ... AT command not supported
+ ... AT command supported

Table 21.6: Availability of AT Commands Depending on Operating Mode of ME

AT Command	Normal Mode	
Configuration Commands		
AT&F	+	-
AT&V	+	-
AT&W	+	-
ATQ	+	-
ATV	+	-
ATX	+	-
ATZ	+	-
AT+CFUN	+	+
AT^SMSO	+	+
AT+GCAP	+	-
AT+CMEE	+	-
AT+CSCS	+	-
AT^SCFG	+	-
AT^SM20	+	-
Status Control Commands		
AT+CMER	+	-
AT+CIND	+	-
AT^SIND	+	-
AT+CEER	+	-
ATS18	+	-
AT+CPAS	+	-
AT+WS46	+	-
Serial Interface Control Commands		
AT\Q	+	-
AT&C	+	-
AT&D	+	-
AT&S	+	-
ATE	+	-
AT+ILRR	+	-
AT+IPR	+	-
AT+CMUX	+	-
Security Commands		
AT+CPIN	+	-

AT Command	Normal Mode	
AT+CPIN2	+	-
AT^SPIC	+	-
AT+CLCK	+	-
AT^SLCK	+	-
AT+CPWD	+	-
AT^SPWD	+	-
Identification Commands		
ATI	+	-
AT+CGMI	+	-
AT+GMI	+	-
AT+CGMM	+	-
AT+GMM	+	-
AT+CGMR	+	-
AT+GMR	+	-
AT+CGSN	+	-
AT+GSN	+	-
AT+CIMI	+	-
Call related Commands		
ATA	+	-
ATD	+	-
ATD><mem><n>	+	-
ATD><n>	+	-
ATD><str>	+	-
ATDI	+	-
ATDL	+	-
ATH	+	-
AT+CHUP	+	-
AT^SHUP	+	-
ATS0	+	-
ATS6	+	-
ATS7	+	-
ATS8	+	-
ATS10	+	-
ATO	+	-
+++	+	-
AT+CBST	+	-
AT+CRLP	+	-
AT+CLCC	+	-
AT^SLCC	+	-
AT+CR	+	-

AT Command	Normal Mode	
AT+CRC	+	-
AT+CSNS	+	-
AT^SCNI	+	-
AT^SLCD	+	-
AT^STCD	+	-
ATP	+	-
ATT	+	-
ATS2	+	-
Network Service Commands		
AT+COPN	+	-
AT+COPS	+	-
AT^SOPS	+	-
AT^SRPN	+	-
AT+CREG	+	-
AT+CSQ	+	-
AT^SMONC	+	-
AT^SMOND	+	-
AT^MONI	+	-
AT^MONP	+	-
AT^SMONG	+	-
AT^SALS	+	-
AT^SHOM	+	-
AT^SPLM	+	-
AT+CPOL	+	-
AT^SPLR	+	-
AT^SPLW	+	-
AT^SPCL	+	-
Supplementary Service Commands		
AT+CACM	+	-
AT^SACM	+	-
AT+CAMM	+	-
AT+CAOC	+	-
AT+CCUG	+	-
AT+CCFC	+	-
AT+CCWA	+	-
AT+CHLD	+	-
AT+CLIP	+	-
AT+CLIR	+	-
AT+COLP	+	-
AT+CPUC	+	-

AT Command	Normal Mode	
AT+CSSN	+	-
AT+CUSD	+	-
Internet Service Commands		
AT^SICS	+	-
AT^SICI	+	-
AT^SISS	+	-
AT^SISI	+	-
AT^SISO	+	-
AT^SISC	+	-
AT^SISR	+	-
AT^SISW	+	-
AT^SIST	+	-
AT^SISE	+	-
GPRS Commands		
AT+CGACT	+	-
AT+CGANS	+	-
AT+CGATT	+	-
AT+CGAUTO	+	-
AT+CGDATA	+	-
AT+CGDCONT	+	-
AT+CGEQMIN	+	-
AT+CGEQREQ	+	-
AT+CGEREP	+	-
AT+CGPADDR	+	-
AT+CGQMIN	+	-
AT+CGQREQ	+	-
AT+CGREG	+	-
AT+CGSMS	+	-
AT^SGAUTH	+	-
AT^SGCONF	+	-
ATA	+	-
ATD*99#	+	-
ATD*98#	+	-
ATH	+	-
ATS0	+	-
FAX Commands		
AT+FBADLIN	+	-
AT+FBADMUL	+	-
AT+FBOR	+	-
AT+FCIG	+	-

AT Command	Normal Mode	
AT+FCLASS	+	-
AT+FCQ	+	-
AT+FCR	+	-
AT+FDCC	+	-
AT+FDFFC	+	-
AT+FDIS	+	-
AT+FDR	+	-
AT+FDT	+	-
AT+FET	+	-
AT+FK	+	-
AT+FLID	+	-
AT+FMDL	+	-
AT+FMFR	+	-
AT+FOPT	+	-
AT+FPHCTO	+	-
AT+FREV	+	-
AT+FRH	+	-
AT+FRM	+	-
AT+FRS	+	-
AT+FTH	+	-
AT+FTM	+	-
AT+FTS	+	-
AT+FVRFC	+	-
Short Message Service (SMS) Commands		
AT+CMGC	+	-
AT+CMGD	+	-
AT+CMGF	+	-
AT+CMGL	+	-
AT+CMGR	+	-
AT+CMGS	+	-
AT+CMGW	+	-
AT+CMSS	+	-
AT+CNMA	+	-
AT+CNMI	+	-
AT+CPMS	+	-
AT+CSCA	+	-
AT+CSCB	+	-
AT+CSDH	+	-
AT+CSMP	+	-
AT+CSMS	+	-
AT^SLMS	+	-

AT Command	Normal Mode	
AT^SMGL	+	-
AT^SMGO	+	-
AT^SMGR	+	-
AT^SSCONF	+	-
AT^SSDA	+	-
AT^SSMSS	+	-
SIM related Commands		
AT+CRSM	+	-
AT+CSIM	+	-
AT+CXXCID	+	-
AT^SCID	+	-
AT^SCKS	+	-
AT^SSET	+	-
AT^SXSM	+	-
SIM Application Toolkit (SAT) Commands		
AT^SSTA	+	-
AT^SSTGI	+	-
AT^SSTGI	+	-
AT^SSTGI	+	-
AT^SSTGI	+	-
AT^SSTGI	+	-
AT^SSTGI	+	-
AT^SSTGI	+	-
AT^SSTGI	+	-
AT^SSTGI	+	-
AT^SSTGI	+	-
AT^SSTGI	+	-
AT^SSTGI	+	-
AT^SSTGI	+	-
AT^SSTGI	+	-
AT^SSTGI	+	-
AT^SSTGI	+	-
AT^SSTGI	+	-
AT^SSTR	+	-
AT^SSTR	+	-
AT^SSTR	+	-
AT^SSTR	+	-
AT^SSTR	+	-
AT^SSTR	+	-
AT^SSTR	+	-

AT Command	Normal Mode	
AT^SSTR	+	-
AT^SSTR	+	-
AT^SSTR	+	-
AT^SSTR	+	-
AT^SSTR	+	-
AT^SSTR	+	-
AT^SSTR	+	-
AT^SSTR	+	-
AT^SSTR	+	-
AT^SSTR	+	-
AT^SSTR	+	-
AT^SSTR	+	-
AT^SSTR	+	-
AT^SSTR	+	-
AT^SSTR	+	-
AT^SSTR	+	-
Phonebook Commands		
AT+CPBR	+	-
AT+CPBS	+	-
AT+CPBW	+	-
AT^SPBC	+	-
AT^SPBD	+	-
AT^SPBG	+	-
AT^SPBS	+	-
AT+CNUM	+	-
AT^SDLD	+	-
Audio Commands		
ATL	+	-
ATM	+	-
AT+CLVL	+	-
AT+CMUT	+	-
AT+VTD	+	-
AT+VTS	+	-
AT^SNFA	+	-
AT^SNFD	+	-
AT^SNFG	+	-
AT^SNFI	+	-
AT^SNFM	+	-
AT^SNFO	+	-
AT^SNFPT	+	-

AT Command	Normal Mode	
AT^SNFS	+	-
AT^SNFTTY	+	-
AT^SNFV	+	-
AT^SNFW	+	-
AT^SRTC	+	-
Hardware related Commands		
AT+CCLK	+	+
AT+CALA	+	+
AT^SBV	+	+
AT^SSYNC	+	-
AT^SCTM	+	+
AT^SRADC	+	-
AT^SSPI	+	-
AT^SWDAC	+	-
GPIO Commands		
AT^SPIO	+	-
AT^SCPIN	+	-
AT^SGIO	+	-
AT^SSIO	+	-
Miscellaneous Commands		
A/	+	-
ATS3	+	-
ATS4	+	-
ATS5	+	-
AT^SFDL	+	+

21.5 AT Command Settings storable with AT&W

Table 21.7: Settings Stored to User Profile on ASC0 / MUX Channel 1

AT Command	Stored Parameters
Configuration Commands	
ATQ	<n>
ATV	<value>
ATX	<value>
AT+CMEE	<errMode>
Status Control Commands	
ATS18	<n>
Serial Interface Control Commands	
AT\Q	<n>
AT&C	<value>
AT&D	<value>
AT&S	<value>
ATE	<value>
AT+ILRR	<value>
Call related Commands	
ATS0	<n>
ATS6	<n>
ATS7	<n>
ATS8	<n>
ATS10	<n>
AT+CBST	<speed>, <name>, <ce>
AT+CRLP	<iws>, <mws>, <T1>, <N2>
AT^SLCC	<n>
AT+CR	<mode>
AT+CRC	<mode>
Network Service Commands	
AT+COPS	<format>
AT+CREG	<n>
Supplementary Service Commands	
AT^SACM	<n>
AT+CLIP	<n>
GPRS Commands	
ATS0	<n>

AT Command	Stored Parameters
FAX Commands	
AT+FCLASS	<n>
Short Message Service (SMS) Commands	
AT+CMGF	<mode>
AT+CNMI	<mode>, <mt>, <bm>, <ds>
AT+CSDH	<show>
AT+CSMS	<service>
AT^SMGO	<n>
SIM related Commands	
AT^SCKS	<mode>
AT^SSET	<n>
Miscellaneous Commands	
ATS3	<n>
ATS4	<n>
ATS5	<n>

Table 21.8: Settings Stored to User Profile on ASC1 / MUX Channels 2 and 3

AT Command	Stored Parameters
Configuration Commands	
ATQ	<n>
ATV	<value>
ATX	<value>
AT+CMEE	<errMode>
Serial Interface Control Commands	
AT\Q	<n>
AT&C	<value>
AT&D	<value>
AT&S	<value>
ATE	<value>
Call related Commands	
ATS0	<n>
AT^SLCC	<n>
AT+CR	<mode>
AT+CRC	<mode>

AT Command	Stored Parameters
Network Service Commands	
AT+COPS	<format>
AT+CREG	<n>
Supplementary Service Commands	
AT^SACM	<n>
AT+CLIP	<n>
GPRS Commands	
ATS0	<n>
Short Message Service (SMS) Commands	
AT+CMGF	<mode>
AT+CNMI	<mode>, <mt>, <bm>, <ds>
AT+CSDH	<show>
AT+CSMS	<service>
AT^SMGO	<n>
SIM related Commands	
AT^SCKS	<mode>
AT^SSET	<n>
Miscellaneous Commands	
ATS3	<n>
ATS4	<n>
ATS5	<n>

21.6 Factory Default Settings Restorable with AT&F

Table 21.9: Factory Default Settings Restorable with AT&F

AT Command	Factory Defaults
Configuration Commands	
ATQ	<n>=0
ATV	<value>=1
ATX	<value>=4
AT+CFUN	<fun>=1
AT+CMEE	<errMode>=0
AT+CSCS	<chset>="GSM"
AT^SM20	<CallMode>=1, <CmgwMode>=1
Status Control Commands	
AT+CMER	<mode>=0, <keyp>=0, <disp>=0, <ind>=0, <bfr>=0
AT+CIND	<mode>=1
ATS18	<n>=0
Serial Interface Control Commands	
AT\Q	<n>=0
AT&C	<value>=1
AT&D	<value>=2
AT&S	<value>=0
ATE	<value>=1
AT+ILRR	<value>=0
Call related Commands	
ATS0	<n>=000
ATS7	<n>=060
ATS10	<n>=002
AT+CBST	<speed>=7, <name>=0, <ce>=1
AT+CRLP	<iws>=61, <mws>=61, <T1>=78, <N2>=6
AT^SLCC	<n>=0
AT+CR	<mode>=0
AT+CRC	<mode>=0
Network Service Commands	
AT+COPS	<format>=0
AT+CREG	<n>=0
AT^SALS	<view>=0, <line>=1
Supplementary Service Commands	
AT^SACM	<n>=0

AT Command	Factory Defaults
AT+CLIP	<n>=0
AT+CSSN	<n>=0, <m>=0
AT+CUSD	<ussdMode>=0
GPRS Commands	
AT+CGAUTO	<n>=3
AT+CGREG	<n>=0
AT+CGSMS	<service>=3
AT^SGAUTH	<auth>=3
ATS0	<n>=000
FAX Commands	
AT+FCLASS	<n>=0
Short Message Service (SMS) Commands	
AT+CMGF	<mode>=0
AT+CNMI	<mode>=0, <mt>=0, <bm>=0, <ds>=0, <bfr>=1
AT+CSCB	<mode>=0, <mids>=" ", <dcss>=" "
AT+CSDH	<show>=0
AT+CSMP	<fo>=17, <vp>=167, <dcs>=0, <pid>=0
AT+CSMS	<service>=0
AT^SMGO	<n>=0
AT^SSCONF	<mode>=0
AT^SSDA	<da>=0
AT^SSMSS	<seq>=0
SIM related Commands	
AT^SCKS	<mode>=0
AT^SSET	<n>=0
Phonebook Commands	
AT+CPBS	<storage>="SM"
AT^SPBS	<internal-counter>=0
Audio Commands	
AT+VTD	<duration>=1
Hardware related Commands	
AT^SCTM	<UrcMode>=0, <tempCtrl>=0
AT^SSPI	<connectionState>=0, <StopStartPeriod>=0
Miscellaneous Commands	
ATS3	<n>=013

AT Command	Factory Defaults
ATS4	<n>=010
ATS5	<n>=008

21.7 Summary of Unsolicited Result Codes (URC)

Table 21.10: Summary of Unsolicited Result Codes (URC)

AT Command	URC
Unsolicited Result Code Presentation	
	^SBC: Undervoltage
	^SBC: Overvoltage
Configuration Commands	
AT+CFUN	^SYSSTART
AT^SMSO	^SHUTDOWN
Status Control Commands	
AT+CMER	+CIEV: <indDescr>, <indValue>$_1$[, <indValue>$_2$]
AT^SIND	+CIEV: <indDescr>[, <indValue>]
AT^SIND	+CIEV: <indDescr>, <cmdType>, <commandDetails>[, <pathLen>, <fileNum>, <fileList>]
AT^SIND	+CIEV: <indDescr>, <indValue>, <vmCounter>
AT^SIND	+CIEV: <indDescr>, <indValue>, <eonsOperator>, <servProvider>
AT^SIND	+CIEV: <indDescr>, <nitzUT>, <nitzTZ>, <nitzDST>
Call related Commands	

AT^SLCC	if the list of current calls is empty:
	^SLCC:
	if one or more calls are currently in the list:
	^SLCC: <idx>, <dir>, <stat>, <mode>, <mpty>, <traffic channel assigned>[, <number>, <type>[, <alpha>]]
	[^SLCC: <idx>, <dir>, <stat>, <mode>, <mpty>, <traffic channel assigned>[, <number>, <type>[, <alpha>]]]
	[...]
	^SLCC:

AT+CRC	RING
AT+CRC	+CRING: <type>
Network Service Commands	
AT+CREG	+CREG: <stat>
AT+CREG	+CREG: <stat>[, <lac>, <ci>]
AT^SALS	^SALS: <line>
AT^SPCL	^SPCL: <status>
Supplementary Service Commands	
AT^SACM	+CCCM: <ccm>
AT+CCWA	+CCWA: <calling number>, <type of number>, <class>, , <CLI validity>
AT+CCWA	^SCWA:
AT+CLIP	+CLIP: <number>, <type>[, , [, [<alpha>][, <CLI validity>]]]
AT+CLIP	+CLIP: <number>, <type>

AT Command	URC
AT+COLP	+COLP: <number>, <type>
AT+CSSN	+CSSI: <code 1>
AT+CSSN	+CSSU: <code 2>
AT+CUSD	+CUSD: <ussdStatus>[, <ussdRsp>[, <ussdDCS>]]
Internet Service Commands	
AT^SISR	^SISR: <srvProfileId>, <urcCauseId>
AT^SISW	^SISW: <srvProfileId>, <urcCauseId>
Internet Service URC "^SIS"	^SIS: <srvProfileId>, <urcCause>[, [<urcInfoId>][, <urcInfoText>]]
GPRS Commands	
AT+CGEREP	+CGEV: REJECT <PDP_type>, <PDP_addr>
AT+CGEREP	+CGEV: NW REACT <PDP_type>, <PDP_addr>, [<cid>]
AT+CGEREP	+CGEV: NW DEACT <PDP_type>, <PDP_addr>, [<cid>]
AT+CGEREP	+CGEV: ME DEACT <PDP_type>, <PDP_addr>, [<cid>]
AT+CGEREP	+CGEV: NW DETACH
AT+CGEREP	+CGEV: ME DETACH
AT+CGEREP	+CGEV: NW CLASS <class>
AT+CGEREP	+CGEV: ME CLASS <class>
AT+CGREG	+CGREG: <stat>
Short Message Service (SMS) Commands	
AT+CNMI	+CMTI: <mem3>, <index>
AT+CNMI	+CMT: <length><CR><LF><pdu>
AT+CNMI	+CMT: <oa>, <scts>[, <tooa>, <fo>, <pid>, <dcs>, <sca>, <tosca>, <length>]<CR><LF><data>
AT+CNMI	+CBM: <length><CR><LF><pdu>
AT+CNMI	+CBM: <sn>, <mid>, <dcs>, <page>, <pages><CR><LF><data>
AT+CNMI	+CDS: <length><CR><LF><pdu>
AT+CNMI	+CDS: <fo>, <mr>[, <ra>][, <tora>], <scts>, <dt>, <st>
AT+CNMI	+CDSI: <mem3>, <index>
AT^SMGO	^SMGO: <mode>
SIM related Commands	
AT^SCKS	^SCKS: <SimStatus>
AT^SSET	^SSIM READY
SIM Application Toolkit (SAT) Commands	
^SSTN SAT Notification	^SSTN: <cmdType>
^SSTN SAT Notification	^SSTN: <cmdTerminateValue>
^SSTN SAT Notification	^SSTN: 254

AT Command	URC
^SSTN SAT Notification	^SSTN: 255
Hardware related Commands	
AT+CALA	+CALA: [<text>]
AT+CALA	^SYSSTART ALARM MODE +CALA: <text>
AT+CALA	+CALA: Unexpected Error
AT^SCTM	^SCTM_B: <UrcCause>
AT^SRADC	^SRADC: <ch>, <count>, <value>[, <value>[, <value>[, <value>[, <value>[, <value>[, <value>[, <value>[, <value>]]]]]]]]]

21.8 Alphabetical List of AT Commands

Table 21.11: Alphabetical List of AT Commands

AT Command	Description	Section and Page
+++	Escape from Data Mode to AT Command Mode	Section 7.18, page 156
A/	Repeat Previous Command Line	Section 20.1, page 550
AT&C	Set Data Carrier Detect (DCD) Line Mode	Section 4.2, page 97
AT&D	Set Data Terminal Ready (DTR) Line Mode	Section 4.3, page 98
AT&F	Reset AT Command Settings to Factory Default Values	Section 2.1, page 32
AT&S	Set Data Set Ready (DSR) Line Mode	Section 4.4, page 99
AT&V	Display current configuration	Section 2.2, page 33
AT&W	Store AT Command Settings to User Defined Profile	Section 2.3, page 36
AT+CACM	Accumulated call meter (ACM) reset or query	Section 9.1, page 208
AT+CALA	Alarm Configuration	Section 18.2, page 523
AT+CAMM	Accumulated call meter maximum (ACMmax) set or query	Section 9.3, page 211
AT+CAOC	Advice of Charge information	Section 9.4, page 212
AT+CBST	Select Bearer Service Type	Section 7.19, page 157
AT+CCFC	Call forwarding number and conditions control	Section 9.6, page 215
AT+CCLK	Real Time Clock	Section 18.1, page 522
AT+CCUG	Closed User Group	Section 9.5, page 213
AT+CCWA	Call Waiting	Section 9.7, page 219
AT+CEER	Extended Error Report	Section 3.4, page 78
AT+CFUN	Functionality Level	Section 2.8, page 41
AT+CGACT	PDP context activate or deactivate	Section 11.1, page 291
AT+CGANS	Manual response to a network request for PDP context activation	Section 11.2, page 293
AT+CGATT	GPRS attach or detach	Section 11.3, page 295
AT+CGAUTO	Automatic response to a network request for PDP context activation	Section 11.4, page 296
AT+CGDATA	Enter data state	Section 11.5, page 298
AT+CGDCONT	Define PDP Context	Section 11.6, page 300
AT+CGEQMIN	Rel. 99 Quality of Service Profile (Minimum acceptable)	Section 11.7, page 302
AT+CGEQREQ	Rel. 99 Quality of Service Profile (Requested)	Section 11.8, page 306
AT+CGEREP	GPRS event reporting	Section 11.9, page 310
AT+CGMI	Request manufacturer identification	Section 6.2, page 131
AT+CGMM	Request model identification	Section 6.4, page 132
AT+CGMR	Request revision identification of software status	Section 6.6, page 133
AT+CGPADDR	Show PDP address	Section 11.10, page 312
AT+CGQMIN	Quality of Service Profile (Minimum acceptable)	Section 11.11, page 313
AT+CGQREQ	Quality of Service Profile (Requested)	Section 11.12, page 316
AT+CGREG	GPRS Network Registration Status	Section 11.13, page 319
AT+CGSMS	Select service for MO SMS messages	Section 11.14, page 321
AT+CGSN	Request International Mobile Equipment Identity (IMEI)	Section 6.8, page 134

AT Command	Description	Section and Page
AT+CHLD	Call Hold and Multiparty	Section 9.8, page 223
AT+CHUP	Hang up call	Section 7.10, page 148
AT+CIMI	Request International Mobile Subscriber Identity (IMSI)	Section 6.10, page 135
AT+CIND	Indicator control	Section 3.2, page 68
AT+CLCC	List of current calls	Section 7.21, page 159
AT+CLCK	Facility lock	Section 5.4, page 119
AT+CLIP	Calling Line Identification Presentation	Section 9.9, page 225
AT+CLIR	Calling Line Identification Restriction	Section 9.10, page 227
AT+CLVL	Loudspeaker volume level	Section 17.4, page 499
AT+CMEE	Error Message Format	Section 2.11, page 48
AT+CMER	Common Event Reporting Configuration	Section 3.1, page 66
AT+CMGC	Send SMS Command	Section 13.2, page 366
AT+CMGD	Delete short message	Section 13.3, page 367
AT+CMGF	Select SMS message format	Section 13.4, page 368
AT+CMGL	List SMS messages from preferred store	Section 13.5, page 369
AT+CMGR	Read SMS messages	Section 13.6, page 371
AT+CMGS	Send SMS	Section 13.7, page 373
AT+CMGW	Write Short Messages to Memory	Section 13.8, page 375
AT+CMSS	Send short messages from storage	Section 13.9, page 377
AT+CMUT	Mute control	Section 17.5, page 500
AT+CMUX	Multiplex mode	Section 4.8, page 106
AT+CNMA	New Message Acknowledgement to ME/TE	Section 13.10, page 378
AT+CNMI	SMS Event Reporting Configuration	Section 13.11, page 379
AT+CNUM	Read own numbers	Section 16.9, page 495
AT+COLP	Connected Line Identification Presentation	Section 9.11, page 228
AT+COPN	Read operator names	Section 8.1, page 175
AT+COPS	Operator Selection	Section 8.2, page 176
AT+CPAS	Activity Status	Section 3.6, page 94
AT+CPBR	Read from Phonebook	Section 16.2, page 478
AT+CPBS	Select phonebook memory storage	Section 16.3, page 481
AT+CPBW	Write into Phonebook	Section 16.4, page 483
AT+CPIN	PIN Authentication	Section 5.1, page 109
AT+CPIN2	PIN2 Authentication	Section 5.2, page 113
AT+CPMS	Preferred SMS message storage	Section 13.12, page 382
AT+CPOL	Preferred Operator List	Section 8.15, page 203
AT+CPUC	Price per unit and currency table	Section 9.12, page 230
AT+CPWD	Change Password	Section 5.6, page 125
AT+CR	Service reporting control	Section 7.23, page 166
AT+CRC	Incoming Call Indication Format	Section 7.24, page 167
AT+CREG	Network registration	Section 8.5, page 183
AT+CRLP	Configure RLP Parameters for Outgoing Non-Transparent Data Calls	Section 7.20, page 158

AT Command	Description	Section and Page
AT+CRSM	Restricted SIM Access	Section 14.1, page 399
AT+CSCA	SMS Service Center Address	Section 13.13, page 384
AT+CSCB	Select Cell Broadcast Message Indication	Section 13.14, page 385
AT+CSCS	Character Set	Section 2.12, page 53
AT+CSDH	Show SMS text mode parameters	Section 13.15, page 386
AT+CSIM	Generic SIM Access	Section 14.2, page 401
AT+CSMP	Set SMS text Mode Parameters	Section 13.16, page 387
AT+CSMS	Select Message Service	Section 13.17, page 389
AT+CSNS	Single Numbering Scheme	Section 7.25, page 169
AT+CSQ	Signal quality	Section 8.6, page 186
AT+CSSN	Supplementary service notifications	Section 9.13, page 232
AT+CUSD	Unstructured Supplementary Service Data	Section 9.14, page 234
AT+CXXCID	Display card ID	Section 14.3, page 403
AT+FBADLIN	Bad Line Threshold	Section 12.2, page 335
AT+FBADMUL	Error Threshold Multiplier	Section 12.3, page 336
AT+FBOR	Query data Bit Order	Section 12.4, page 337
AT+FCIG	Query or set the Local Polling ID	Section 12.5, page 338
AT+FCLASS	Fax: Select, read or test service class	Section 12.6, page 339
AT+FCQ	Copy Quality Checking	Section 12.7, page 340
AT+FCR	Capability to Receive	Section 12.8, page 341
AT+FDCC	Query or set capabilities	Section 12.9, page 342
AT+FDFFC	Data Compression Format Conversion	Section 12.10, page 343
AT+FDIS	Query or set session parameters	Section 12.11, page 344
AT+FDR	Begin or continue phase C Data Reception	Section 12.12, page 345
AT+FDT	Data Transmission	Section 12.13, page 346
AT+FET	End a page or document	Section 12.14, page 347
AT+FK	Kill operation, orderly FAX abort	Section 12.15, page 348
AT+FLID	Query or set the Local Id setting capabilities	Section 12.16, page 349
AT+FMDL	Identify Product Model	Section 12.17, page 350
AT+FMFR	Request Manufacturer Identification	Section 12.18, page 351
AT+FOPT	Set bit Order independently	Section 12.19, page 352
AT+FPHCTO	DTE Phase C Response Timeout	Section 12.20, page 353
AT+FREV	Identify Product Revision	Section 12.21, page 354
AT+FRH	Receive Data Using HDLC Framing	Section 12.22, page 355
AT+FRM	Receive Data	Section 12.23, page 356
AT+FRS	Receive Silence	Section 12.24, page 357
AT+FTH	Transmit Data Using HDLC Framing	Section 12.25, page 358
AT+FTM	Transmit Data	Section 12.26, page 359
AT+FTS	Stop Transmission and Wait	Section 12.27, page 360
AT+FVRFC	Vertical Resolution Format Conversion	Section 12.28, page 361
AT+GCAP	Capabilities List	Section 2.10, page 47
AT+GMI	Request manufacturer identification	Section 6.3, page 131

AT Command	Description	Section and Page
AT+GMM	Request model identification	Section 6.5, page 132
AT+GMR	Request revision identification of software status	Section 6.7, page 133
AT+GSN	Request International Mobile Equipment Identity (IMEI)	Section 6.9, page 134
AT+ILRR	Bit Rate Reporting	Section 4.6, page 101
AT+IPR	Bit Rate	Section 4.7, page 103
AT+VTD	Tone duration	Section 17.6, page 501
AT+VTS	DTMF and tone generation	Section 17.7, page 502
AT+WS46	Select wireless network	Section 3.7, page 95
AT\Q	Flow Control	Section 4.1, page 96
AT^MONI	Monitor idle mode and dedicated mode	Section 8.9, page 192
AT^MONP	Monitor neighbor cells	Section 8.10, page 195
AT^SACM	Advice of charge and query of ACM and ACMmax	Section 9.2, page 209
AT^SALS	Alternate Line Service	Section 8.12, page 199
AT^SBV	Battery/Supply Voltage	Section 18.3, page 526
AT^SCFG	Extended Configuration Settings	Section 2.13, page 54
AT^SCID	Display SIM card identification number	Section 14.4, page 404
AT^SCKS	Query SIM and Chip Card Holder Status	Section 14.5, page 405
AT^SCNI	List Call Number Information	Section 7.26, page 170
AT^SCPIN	Pin Configuration	Section 19.2, page 546
AT^SCTM	Critical Operating Temperature Monitoring	Section 18.5, page 529
AT^SDLD	Delete the 'last number redial' memory	Section 16.10, page 496
AT^SFDL	Firmware Download	Section 20.5, page 554
AT^SGAUTH	Set type of authentication for PPP connection	Section 11.15, page 322
AT^SGCONF	Configuration of GPRS related Parameters	Section 11.16, page 323
AT^SGIO	Get IO state of a specified pin	Section 19.3, page 548
AT^SHOM	Display Homezone	Section 8.13, page 201
AT^SHUP	Hang up call(s) indicating a specific GSM04.08 release cause	Section 7.11, page 149
AT^SICI	Internet Connection Information	Section 10.2, page 243
AT^SICS	Internet Connection Setup Profile	Section 10.1, page 239
AT^SIND	Extended Indicator Control	Section 3.3, page 71
AT^SISC	Internet Service Close	Section 10.6, page 264
AT^SISE	Internet Service Error Report	Section 10.10, page 273
AT^SISI	Internet Service Information	Section 10.4, page 256
AT^SISO	Internet Service Open	Section 10.5, page 258
AT^SISR	Internet Service Read Data	Section 10.7, page 265
AT^SISS	Internet Service Setup Profile	Section 10.3, page 246
AT^SIST	Enter Transparent Access Mode	Section 10.9, page 271
AT^SISW	Internet Service Write Data	Section 10.8, page 268
AT^SLCC	Extended list of current calls	Section 7.22, page 161
AT^SLCD	Display Last Call Duration	Section 7.27, page 171
AT^SLCK	Facility lock	Section 5.5, page 124

AT Command	Description	Section and Page
AT^SLMS	List SMS Memory Storage	Section 13.18, page 391
AT^SM20	Set M20 compatibility mode	Section 2.14, page 65
AT^SMGL	List Short Messages from preferred store without setting status to REC READ	Section 13.19, page 392
AT^SMGO	Set or query SMS overflow presentation mode or query SMS overflow	Section 13.20, page 393
AT^SMGR	Read short message without setting status to REC READ	Section 13.21, page 395
AT^SMONC	Cell Monitoring	Section 8.7, page 187
AT^SMOND	Cell Monitoring	Section 8.8, page 189
AT^SMONG	Packet Data Monitor	Section 8.11, page 197
AT^SMSO	Switch Off BGS2-E	Section 2.9, page 46
AT^SNFA	Set or query of microphone attenuation	Section 17.8, page 503
AT^SNFD	Set audio parameters to manufacturer default values	Section 17.9, page 505
AT^SNFG	Generate Tone	Section 17.10, page 506
AT^SNFI	Set microphone path parameters	Section 17.11, page 508
AT^SNFM	Set microphone audio path and power supply	Section 17.12, page 509
AT^SNFO	Set audio output (= loudspeaker path) parameter	Section 17.13, page 511
AT^SNFPT	Set progress tones	Section 17.14, page 513
AT^SNFS	Select audio hardware set	Section 17.15, page 514
AT^SNFTTY	Signal TTY/CTM audio mode capability	Section 17.16, page 516
AT^SNFV	Set loudspeaker volume	Section 17.17, page 518
AT^SNFW	Write audio setting in non-volatile store	Section 17.18, page 519
AT^SOPS	Extended Operator Selection	Section 8.3, page 179
AT^SPBC	Find first matching entry in sorted phonebook	Section 16.5, page 486
AT^SPBD	Purge phonebook memory storage	Section 16.6, page 487
AT^SPBG	Display phonebook entries in alphabetical order	Section 16.7, page 488
AT^SPBS	Step through the selected phonebook alphabetically	Section 16.8, page 491
AT^SPCL	Set Preferred Cell List	Section 8.18, page 206
AT^SPIC	Display PIN counter	Section 5.3, page 115
AT^SPIO	General Purpose IO Driver Open/Close	Section 19.1, page 544
AT^SPLM	Read the PLMN list	Section 8.14, page 202
AT^SPLR	Read entry from the preferred operators list	Section 8.16, page 204
AT^SPLW	Write an entry to the preferred operators list	Section 8.17, page 205
AT^SPWD	Change Password	Section 5.7, page 129
AT^SRADC	Configure and Read ADC Measurement	Section 18.6, page 532
AT^SRPN	Replace Operator Names	Section 8.4, page 181
AT^SRTC	Ring tone configuration	Section 17.19, page 520
AT^SSCONF	SMS Command Configuration	Section 13.22, page 396
AT^SSDA	Set SMS Display Availability	Section 13.23, page 397
AT^SSET	SIM Data Ready Indication	Section 14.6, page 407
AT^SSIO	Set IO state of a specified pin	Section 19.4, page 549
AT^SSMSS	Set Short Message Storage Sequence	Section 13.24, page 398

AT Command	Description	Section and Page
AT^SSPI	Serial Protocol Interface	Section 18.7, page 535
AT^SSTA	Remote-SAT Interface Activation	Section 15.4, page 419
AT^SSTGI	SAT Get Information	Section 15.6, page 423
AT^SSTGI	SAT Get Information - Refresh (1)	Section 15.7, page 424
AT^SSTGI	SAT Get Information - Set Up Event List (5)	Section 15.8, page 426
AT^SSTGI	SAT Get Information - Set Up Call (16)	Section 15.9, page 427
AT^SSTGI	SAT Get Information - Send SS (17)	Section 15.10, page 429
AT^SSTGI	SAT Get Information - Send USSD (18)	Section 15.11, page 430
AT^SSTGI	SAT Get Information - Send Short Message (19)	Section 15.12, page 431
AT^SSTGI	SAT Get Information - Send DTMF (20)	Section 15.13, page 432
AT^SSTGI	SAT Get Information - Launch Browser (21)	Section 15.14, page 433
AT^SSTGI	SAT Get Information - Play Tone (32)	Section 15.15, page 435
AT^SSTGI	SAT Get Information - Display Text (33)	Section 15.16, page 437
AT^SSTGI	SAT Get Information - Get Inkey (34)	Section 15.17, page 439
AT^SSTGI	SAT Get Information - Get Input (35)	Section 15.18, page 441
AT^SSTGI	SAT Get Information - Select Item (36)	Section 15.19, page 443
AT^SSTGI	SAT Get Information - Set up Menu (37)	Section 15.20, page 445
AT^SSTGI	SAT Get Information - Set up Idle Mode Text (40)	Section 15.21, page 447
AT^SSTGI	SAT Get Information - Language Notification (53)	Section 15.22, page 448
AT^SSTR	SAT Response	Section 15.23, page 449
AT^SSTR	SAT Response - Refresh (1)	Section 15.24, page 451
AT^SSTR	SAT Response - Set Up Event List (5)	Section 15.25, page 452
AT^SSTR	SAT Response - Set Up Call (16)	Section 15.26, page 453
AT^SSTR	SAT Response - Send SS (17)	Section 15.27, page 454
AT^SSTR	SAT Response - Send USSD (18)	Section 15.28, page 455
AT^SSTR	SAT Response - Send Short Message (19)	Section 15.29, page 456
AT^SSTR	SAT Response - Send DTMF (20)	Section 15.30, page 457
AT^SSTR	SAT Response - Launch Browser (21)	Section 15.31, page 458
AT^SSTR	SAT Response - Play Tone (32)	Section 15.32, page 459
AT^SSTR	SAT Response - Display Text (33)	Section 15.33, page 460
AT^SSTR	SAT Response - Get Inkey (34)	Section 15.34, page 461
AT^SSTR	SAT Response - Get Input (35)	Section 15.35, page 463
AT^SSTR	SAT Response - Select Item (36)	Section 15.36, page 464
AT^SSTR	SAT Response - Setup Menu (37)	Section 15.37, page 465
AT^SSTR	SAT Response - Set Up Idle Mode Text (40)	Section 15.38, page 466
AT^SSTR	SAT Response - Language Notification (53)	Section 15.39, page 467
AT^SSTR	SAT Event - Menu Selection (211)	Section 15.40, page 468
AT^SSTR	SAT Event - User Activity (232)	Section 15.41, page 469
AT^SSTR	SAT Event - Idle Screen Available (233)	Section 15.42, page 470
AT^SSTR	SAT Event - Language Selection (235)	Section 15.43, page 471
AT^SSTR	SAT Event - Browser Termination (236)	Section 15.44, page 472
AT^SSTR	SAT Event - Terminate Command (254)	Section 15.45, page 473

AT Command	Description	Section and Page
AT^SSYNC	Configure SYNC Pin	Section 18.4, page 527
AT^STCD	Display Total Call Duration	Section 7.28, page 172
AT^SWDAC	PWM Signal Configuration for DAC	Section 18.8, page 542
AT^SXSM	Extended SIM Access	Section 14.7, page 408
ATA	Connect to Incoming Call	Section 7.2, page 137
ATA	Manual acceptance of a network request for PDP context activation	Section 11.17, page 324
ATD	Mobile originated call to specified number	Section 7.3, page 138
ATD*98#	Request GPRS IP service	Section 11.19, page 326
ATD*99#	Request GPRS service	Section 11.18, page 325
ATD><mem><n>	Mobile originated call using specific memory and index number	Section 7.4, page 140
ATD><n>	Mobile originated call from active memory using index number	Section 7.5, page 142
ATD><str>	Mobile originated call from active memory using corresponding field	Section 7.6, page 143
ATDI	Mobile originated data call to ISDN number	Section 7.7, page 145
ATDL	Redial last number used	Section 7.8, page 146
ATE	AT Command Echo	Section 4.5, page 100
ATH	Disconnect existing connection	Section 7.9, page 147
ATH	Manual rejection of a network request for PDP context activation	Section 11.20, page 327
ATI	Display product identification information	Section 6.1, page 130
ATL	Set monitor speaker loudness	Section 17.2, page 498
ATM	Set monitor speaker mode	Section 17.3, page 498
ATO	Switch from command mode to data mode / PPP online mode	Section 7.17, page 155
ATP	Select pulse dialing	Section 7.29, page 173
ATQ	Result Code Presentation Mode	Section 2.4, page 37
ATS0	Set number of rings before automatically answering a call	Section 7.12, page 150
ATS0	Automatic Response to Network Request for PDP Context Activation	Section 11.21, page 328
ATS10	Set disconnect delay after indicating the absence of data carrier	Section 7.16, page 154
ATS18	Extended call release report	Section 3.5, page 92
ATS2	Set escape sequence character	Section 7.31, page 174
ATS3	Command Line Termination	Section 20.2, page 551
ATS4	Response Formatting	Section 20.3, page 552
ATS5	Command Line Editing	Section 20.4, page 553
ATS6	Set pause before blind dialing	Section 7.13, page 151
ATS7	Set number of seconds to wait for connection completion	Section 7.14, page 152
ATS8	Comma Dial Pause Time	Section 7.15, page 153
ATT	Select tone dialing	Section 7.30, page 173
ATV	Result code format mode	Section 2.5, page 38

AT Command	Description	Section and Page
ATX	CONNECT Result Code Format	Section 2.6, page 39
ATZ	Restore AT Command Settings from User Defined Profile	Section 2.7, page 40