TECSUN

BCL-3000

FM STEREO-MW-SW1-SW2-SW3
HIGH SENSITIVITY WORLD RECEIVER

OPERATING MANUAL

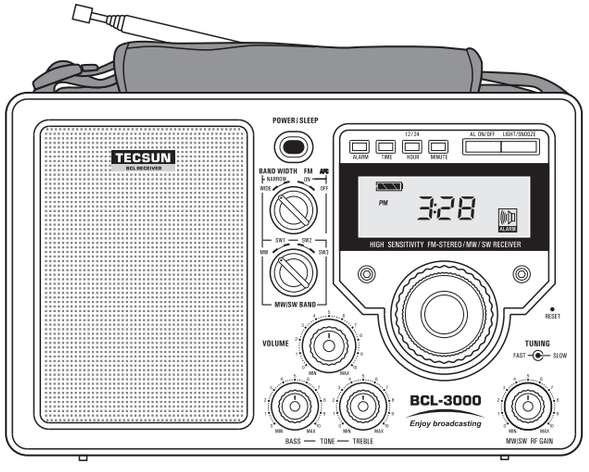

PLEASE READ THIS MANUAL BEFORE OPERATION

TABLE OF CONTENTS

page

1 MAJOR FEATURES OF THE MODEL BCL-3000 2
2 CONTROL LOCATIONS 3
3 CONNECTING TO POWER 5
4 PRELIMINARY CONTROL SETTINGS 6
5 TURNING THE RADIO ON AND OFF 7
6 SIGNAL STRENGTH INDICATOR 7
7 TUNING IN FM STATIONS 8
8 TUNING IN MW STATIONS 9
9 TUNING IN SHORTWAVE STATIONS 10
10 SETTING THE CLOCK 11
11 USING THE SLEEP TIMER 11
12 ALARM CLOCK 12
13 USING THE BACKLIGHT 13
14 USING THE RESET 13
15 USING THE LINE OUT SOCKETS 14
16 USING THE EARPHONE JACK 14
17 USING SUPPLEMENTARY ANTENNAS 14

15 USING THE LINE OUT SOCKETS

The line out sockets (RCA sockets), labeled L, R, provide industry standard left and right stereo line level outputs that can be used to feed audio to a tape recorder, stereo system, or any device with audio line level inputs. The output is stereo when the radio is tuned to an FM station broadcasting in stereo.

16 USING THE EARPHONE JACK

The earphone jack can be used with stereo headphones using a 1/8 inch (3.5 millimeter) plug. Sound is in stereo.

17 USING SUPPLEMENTARY ANTENNAS

SHORTWAVE ANTENNAS. This radio can be used with basic, long wire antennas and other high impedance shortwave antennas (optimally 500 ohm). The length of a long-wire antenna should be anywhere from about 30-100 feet (10-30 meters). Best performance is from copper wire. The antenna should be above ground, preferably running in a straight line. Non-conductive insulators should be used on both ends of the wire to prevent signal loss. The wire is plugged into the red colored spring socket, MW,SW ANT., on the back of the radio. Connecting a ground wire to the black spring socket, GND, often helps reception, but is not mandatory. The ground wire should be connected to a cold water pipe or a ground rod. If no water pipe or ground rod is available, connect a wire about the same length as the antenna wire and lay it on the ground. NEVER CONNECT THE GROUND WIRE TO A GAS PIPE.

MW ANTENNAS: Any high impedance (optimally 500 ohm) MW antenna can be used, including long-wires and tuned loops. A ground wire, as discussed under SHORTWAVE ANTENNAS, is even more helpful during MW reception and often improves reception considerably, even when no supplementary MW antenna is used.

FM ANTENNAS: Connect FM antennas to the FM ANT. CABLE FM socket on the back of the radio. These antennas should have an impedance of 75 ohms. Most antennas fed with coaxial cable are 75 ohm antennas.

13 USING THE BACKLIGHT

The BCL-3000 has a backlight to light the display in low light situations. It can be activated with the following methods.

1. To temporarily light the display, perform a quick, short press on the LIGHT/SNOOZE button. The backlight automatically turns off after eight seconds.
2. To permanently light the display, press and hold LIGHT/SNOOZE button for more than one second. The backlight will be turned on until the LIGHT/SNOOZE button is pressed again.
3. When the radio is turned on/off, press the following keys turns on the back Light for 8 seconds (ALARM SET button, TIME SET button, HOUR or MINUTE SET button, AL ON/OFF button and LIGHT/SNOOZE button)
4. When the radio is turned on, rotating the tuning knob (fast & slow) also turns on the backlight for 8 seconds .

CAUTION: leaving the backlight permanently on will drain the batteries more rapidly.

14 USING THE RESET

BCL-3000 incorporates with a computer microchip (the component that controls how the radio operates). If the radio has been subjected to abnormal environmental conditions, the computer microchip may malfunction and the following symptoms may appear.

- The display shows nothing and the radio cannot be turned on by pressing POWER & SLEEP button.
- The display shows random characters or does not work properly although the radio can receive stations normally.

In these cases, you might need to reset the radio. To reset the BCL-3000, unplug the external adaptor (if one is being used) and remove the batteries from the battery compartment. Insert a pointed object, such as straightened paper clip, into the RESET hole on the right, front side of the radio and gently press and release the button inside the hole. Then reinstall the batteries.

1 MAJOR FEATURES OF THE MODEL BCL-3000

- MW 520-1610 KHz
- FM 87-108 MHz
- SHORTWAVE – continuous coverage from 3 to 28 MHz. This includes 13 international broadcast bands. 11, 13, 15, 16, 19, 22, 25, 31, 41, 49, 60, 75 and 90 meters.
- Highly sensitive and selective analog tuner circuitry
- Digital frequency readout
- Liquid Crystal Display, (LCD), for frequency and clock
- Digital clock with selectable 12/24 hour format
- Wake-up timer (use as radio-play alarm clock)
- Power failure backup feature
- Sleep timer
- Main tuning knob and independent fine-tuning control knob
- Variable RF Gain Control
- Rotary volume control
- Variable, independent bass and treble controls
- Low-pass filter for shortwave and MW reception
- Left/Right line level outputs (stereo in FM)
- Stereo/Mono switch
- Stereo Earphone socket
- Carrying handle/convertible shoulder strap
- Built-in telescopic antenna for FM and shortwave
- Built-in ferrite bar antenna for MW
- Jacks for supplementary MW, FM and Shortwave antennas
- Powered by or 4 size D batteries, or DC 6V

2 CONTROL LOCATION

1 Power & Sleep Button
2 Alarm Set Button
3 Time Set Button
4 Hour Set Button
5 Minute Set Button
6 Alarm On/Off Button
7 Backlight/Snooze Button
8 Battery Power Indicator
9 Signal/Strength Indicator
10 Digital Frequency Readout
11 LCD Display
12 Turning Knob (fast)
13 Turning Knob (slow)
14 Reset Button
15 MW/SW RF Gain Knob
16 Treble Knob
17 Volume Knob
18 Bass Knob
19 MW/SW1/SW2/SW3 Band Select
20 Bandwidth/FM Band Select
21 Telescopic Antenna for FM/SW
22 Carrying Handle
23 Shoulder Strap
24 DC Jack
25 Battery Compartment
26 MW/SW Antenna Jack
27 FM Antenna Jack
28 SW LPF On/Off
29 Stereo/Mono switch
30 L&R Line Out
31 Stereo Earphone Jack

12 ALARM CLOCK

SETTING, ACTIVATING AND DEACTIVATING (ALARM CLOCK)

The BCL-3000 includes a programmable turn-on timer, which allows it to turn on at preset times, like an alarm clock. With the radio power on or off, hold down the ALARM button for about three seconds or until the time digits start flashing, then release it. While they are still flashing press the HOUR and MINUTE buttons to set the turn-on time, then immediately press the AL ARM button. If the ALARM button is not pressed, the turn-on time will automatically be set at the time you selected after 5 seconds.

To activate/deactivate the turn-on timer feature, with the radio turned on or off, press the AL ON/OFF button, causing the symbol of a speaker to appear in the lower right corner of the display. When the speaker symbol is in the display, the turn-on timer feature is activated. When it is not in the display, it is deactivated.
When the alarm radio is on, press power & sleep button to turn it off.

USING THE SNOOZE FEATURE

When the timer activates and turns the radio on, the timer activation symbol appears flashing the display. While it is flashing, press/release LIGHT/SNOOZE button.The radio will turn off and then turn on again in 10 minutes. This process can be repeated 3 times.

To see the turn-on time at any time, with the radio on or off, press the ALARM button. The turn-on time will then appear in the display for about four seconds.

IMPORTANT NOTES ABOUT THE TURN-ON TIMER FEATURE

- The radio can be turned o /off for the turn-on timer feature to function.
- The radio will automatically turn off after playing for 30 minutes.
- To turn off the radio before it turns off automatically, press the AL ON/OFF or POWER&SLEEP button.

10 SETTING THE CLOCK

The BCL-3000's clock is a selectable 12-hour AM/PM mode or 24-hour mode time system. Pressing the HOUR button for more than five seconds toggles it from one mode to the other. When AM or PM appears in the display, it is set in the 12-hour AM/PM mode. If they are not in the display, it is in the 24-hour mode.

The radio can be turned on/off to set the clock. With the radio turned on/off, hold down the TIME button for two seconds, then release it. The time display will flash. While it is flashing press the HOUR and MINUTE buttons to set the correct time. After setting the correct time, immediately press the TIME button to finalize the entry. If the TIME button is not pressed, the display will automatically finalize the entry after about five seconds. While setting the time, the HOUR and MINUTE buttons can be held down to advance the time faster.

NOTE: When the radio is turned off, the display panel shows the time. When it is turned on, it shows a radio frequency. While on, pressing the TIME button causes the display to change from frequency to time for about three seconds, after which it shows frequency again.

11 USING THE SLEEP TIMER

The BCL-3000 includes a sleep timer, which lets you set the radio to turn off after an amount of time of your choice. On the BCL-3000, the sleep timer is automatically activated for 90 minutes whenever the radio is turned on. After pressing the POWER&SLEEP button to turn on the radio, notice that '90' appears in the display. This means that the radio's sleep timer is engaged, allowing the radio to automatically turn off after 90 minutes.

To change the amount of minutes that the radio plays before automatically shutting off, press the POWER&SLEEP button to switch on the radio. After 90 appears, immediately do quick, short, repeated presses on the POWER & SLEEP button until the desired time is reached. Note that the sleep timer changes from 90 to 75 to 60 to 45 to30 to15 to10 to 01 minutes and finally to off, with each successive press.

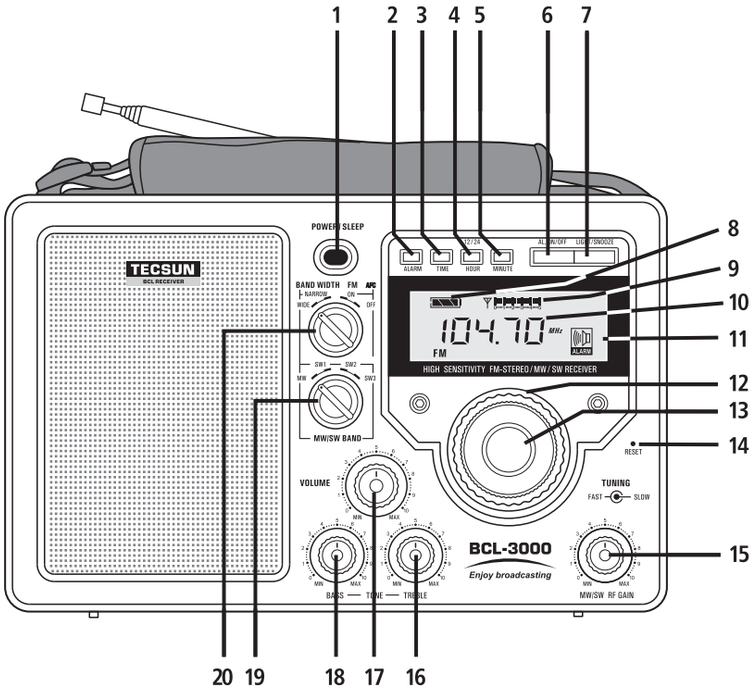

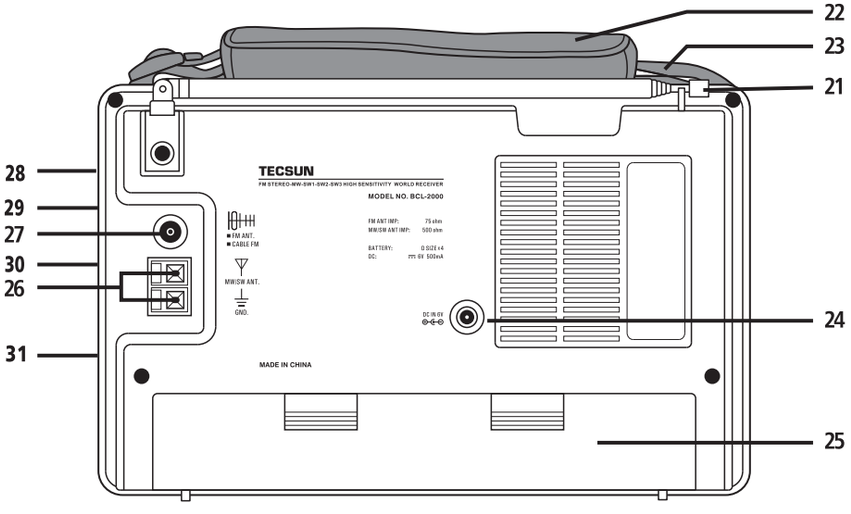

3 CONNECTING TO POWER

USING BATTERIES

Open the battery compartment and insert 4 size D batteries (also called UM-1) according to the polarity diagram imprinted on the battery compartment floor.

Please note the following regarding battery operation:

- The BCL-3000 has a battery power indicator in the LCD . Fresh batteries will show a full power level of six bars. If the indicator shows less than two bars or the sound becomes week and distorted, replace the batteries.
- The radio will turn off automatically if the batteries become too weak.
- Check the batteries periodically for leakage. As a precaution, remove the batteries to prevent possible leakage if it is to be stored for long periods without use.
- Turn off the radio while replacing the batteries.

9 TUNING IN SHORTWAVE STATIONS

IF YOU ARE ALREADY FAMILIAR WITH SHORTWAVE:

Fully extend the telescopic antenna and turn on the radio. Turn the MW/SW BAND switch to the SW1, SW2 or SW3 position. SHORTWAVE 1, 2 or 3 appears in the display. Use the outer 'fast' tuning knob to quickly go to a desired frequency that you already know or to the band that you want to tune around in, then fine tune stations with the inner 'slow' knob when needed. If a station is so strong that audio distortion occurs, reduce the gain level with the MW/SW RF GAIN control knob by turning it counter-clockwise.

IF YOU ARE NEW TO SHORTWAVE OR NEED A REFRESHER

(also see the section titled INTRODUCTION TO SHORTWAVE, later in this manual) Fully extend the telescopic antenna and turn on the radio. Get close to a window and fully extend the telescopic antenna. Follow the instructions below, depending on day or night listening.

If it is daytime, turn the MW/SW BAND switch to the SW2 position. Use the fast tuning knob and tune to 15100 KHz. This is the beginning of the shortwave 19 meter band, one of the three best daytime bands, extending from 15100-15600 KHz. Using the slow tuning knob, tune through this band, carefully listening for stations. Also try the 13 meter band (21450-21850 KHz) and 16 meter band (17480-17900 KHz), both in SW3.

If it is night, turn the MW/SW BAND switch to the SW1 position. Use the fast tuning knob and tune to 5800 KHz. This is the beginning of the shortwave 49 meter band, one of the four best night bands, extending from 5800-6200 KHz. Using the slow tuning knob, tune through this band, carefully listening for stations. Also try the 25 meter band in SW2 (11600-12200 KHz), 31 meters in SW2 (9400-9900 KHz) and 41 meters in SW1 (7150-7600 KHz).

NOTE: If there is interference from adjacent stations, place the BAND WIDTH control in the NARROW position. If there is no interference, leave it in the WIDE position. If there is excess background noise, turn on the SW LPF switch, which may minimize the noise. If a station is so strong that audio distortion occurs, reduce the gain level with the MW/SW RF GAIN control knob by turning it counter-clockwise.

8 TUNING IN MW STATIONS

TUNING IN MW STATIONS

Turn on the radio and turn the MW/SW BAND switch to the MW position. MW appears in the display. Use the outer 'fast' tuning knob to find stations, fine tuning with the inner 'slow' knob when needed.

- If there is interference from adjacent stations, place the BAND WIDTH control in the NARROW position. If there is no interference, leave it in the WIDE position.
- If there is excess background noise, turn on the SW LPF switch, which may minimize the noise.
- If a station is so strong that audio distortion occurs, reduce the gain level with the MW/SW RF GAIN control knob by turning it counter-clockwise.
- The telescopic antenna does not have to be extended for MW reception. The radio has an internal, directional, ferrite-bar antenna for MW reception.
- To optimize MW reception, swivel the radio until maximum signal strength is achieved.

4 SETTING THE PRELIMINARY CONTROL SETTINGS

Use these controls as initial guidelines. As you get to know the radio, you will develop your own 'favorite' settings.

- Turn the VOLUME control down to no greater than 3 so that the radio does not play loudly when first turned on.
- Turn the MW/SW RF GAIN control to the 10 position.
- Turn the BASS-TONE-TREBLE controls into the 5 position.
- Turn the SW LPF switch to the OFF position (right side of the radio).
- Turn the STEREO MONO switch to the MONO position.

5 TURNING THE RADIO ON AND OFF

There are two ways to turn the radio on, with the 90-minute timer feature or without the 90-minute timer. To turn it off at any time, press the 'POWER & SLEEP' button.

NOTE: When SLEEP Times is off, the clock always shows in the display.

1. **WITH TIMER:** A quick, short press of the 'POWER & SLEEP' button turns the radio on. '90' shows in the display for about three seconds, then the radio's normal frequency display shows. Turning it on this way causes it play for 90 minutes, after which its timer turns it off automatically (to minimize excess battery drain). To change this automatic turn-off time from 90 minutes to a shorter time, see the section titled USING THE SLEEP TIMER.

2. **WITHOUT TIMER:** A long press of approximately 3 seconds of the 'POWER & SLEEP' button turns the radio on without engaging the automatic 90-minute timer feature, causing the radio to play indefinitely when using the AC adaptor, and turning off only when the batteries drain or the radio is turned off.

6 SIGNAL STRENGTH INDICATOR

When you are listening to stations, the signal strength meter, in the upper right area of the display, will show the strength level of reception.

7 TUNING IN FM STATIONS

Fully extend the telescopic antenna and turn on the radio. Switch the BAND WIDTH FM AFC selector to the FM AFC ON position. FM appears in the display, as well as FM frequency numbers in the range of about 87-108 megahertz, abbreviated MHz. Use the outer 'fast' tuning knob to find stations, fine tuning with the inner 'slow' knob when needed. When Automatic Frequency Control (AFC) is ON, strong signals will automatically be captured and given precedence over weaker ones. With AFC turned OFF, the weak stations inbetween stronger ones will be tuned in easier. AFC ON is generally the preferred position.

- Placing the STEREO MONO switch in the STEREO position enables FM reception in stereo.

NOTE: The stereo is heard from ear-phones or headphones and it is also heard from the stereo line-level outputs when feeding their output to amplified speakers or a stereo system.

- Placing the STEREO MONO switch in the MONO position will improve the quality of a poorly received station, but it will not be heard in stereophonic sound from the line level outputs.

- When listening through the built-in speaker, stereophonic sound is not heard. Only monaural sound is heard from the built-in speaker.

- If a station is not being received clearly, swiveling the telescopic antenna may result in improved reception.