JSmart700 Series

Operating Instructions

MANUGENJSMART7xxW - Version 1.02
© 2019-2020 EXOR International S.p.A.

Copyright © 2019-2020 Exor International S.p.A. – Verona, Italy
Subject to change without notice
The information contained in this document is provided for informational purposes only. While efforts were made to verify the accuracy of the information contained in this documentation, it is provided “as is” without warranty of any kind.
Third-party brands and names are the property of their respective owners.
www.exorint.com

Software available in these products is based on OpenSource. Visit oss.exorint.net for more details.

Table of Contents

Introduction	4
Safety Guide	5
1 Product Overview	6
2 Standards and Approvals	7
3 Technical Specifications	9
4 Technical Data	13
4.1 Dimensions	15
4.2 Installation Environment and Procedure	18
4.3 Safety instruction	19
5 Connections	20
5.1 Ethernet Port	20
6 Power Supply, Grounding and Shielding	21
7 Battery	22
8 Special Instruction for Use	24
9 Getting Started	24
10 System Settings	25
11 Unpacking and Packing Instructions	27

© 2019-2020 EXOR International S.p.A. - Subject to change without notice

Introduction

The operational guidelines described below is information which relates to the device, installation, transportation, storage, assembly, use and maintenance.

This Operating Instruction describes the main features of the Exor operator panels. The Manual refers to the following models:

JSmart707	Field-ready HMI 7” color TFT, PCAP touchscreen, Ethernet port PoE
JSmart710	Field-ready HMI 10.1” color TFT, PCAP touchscreen, Ethernet port PoE
JSmart715	Field-ready HMI 15.6” color TFT, PCAP touchscreen, Ethernet port PoE
JSmart721	Field-ready HMI 21.5” color TFT, PCAP touchscreen, Ethernet port PoE

© 2019-2020 EXOR International S.p.A. - Subject to change without notice

Safety Guide

The manual contains safety standards that must be respected for the personal safety and to avoid damage. Indications of attention are divided into three levels of severity:

DANGER: indicates a failure to observe safety rules and such failure may cause death or serious injuries.



DANGER

ATTENTION: indicates a failure to observe safety rules and that deficiency may cause damage.



ATTENTION

CAUTION: indicates a failure to observe safety rules and that deficiency may cause defects to the equipment or inconsistencies.



CAUTION

© 2019-2020 EXOR International S.p.A. - Subject to change without notice

1 Product Overview

JSmart700 products are ideal for field installation in critical areas. High-resolution displays and multitouch PCAP touchscreen with a robust glass front.
Power-over-Ethernet (PoE) for maximum simplicity of connection using standard shielded CAT 5 wiring. Full IP protection with the use of dedicated connectors for the maximum flexibility of installation, from mounting arm to a simple M22 hole. The product includes environment and motion sensors to make this device a true IIoT edge device for Industry 4.0 applications.
The JSmart product family has been optimized for use as an embedded browser or as a JMobile HMI device.

- Open platform for Linux applications
- Performing HTML5-compatible browser with graphic accelerator
- JMobile runtime with OPC UA Server and Client
- Optional CODESYS V3 PLC for integrated HMI and control applications
- Built-in sensors (temperature and acceleration)

© 2019-2020 EXOR International S.p.A. - Subject to change without notice

2 Standards and Approvals

The products have been designed for use in an industrial environment in compliance with the 2014/53/EU Directive.

The products have been designed in compliance with:

EN 61000-6-4
EN 61000-6-2
EN 61000-6-3
EN 61000-6-1
ETSI EN 301 489-1
ETSI EN 301 489-17
ETSI EN 300 328
EN 62311 *
EN 61010-1
EN 61010-2-201

* Standard radio signal and minimum distance from the body calculated according to EN 62311

Standard radio signal	WiFi 2,4GHz
Minimum distance form the body (cm)*	2

* The WiFi antenna is positioned behind the black band above the display.

The products are in compliance with the Restrictions on Certain Hazardous Substances (RoHS) Directive 2011/65/EU

In compliance with the above regulations the products are CE marked.

© 2019-2020 EXOR International S.p.A. - Subject to change without notice

2 Standards and Approvals

Product Identification

The product may be identified by the indications in the back cover. You will have to know the type of unit you are using for correct usage of the information contained in the guide.
An example of the information reported is shown below:

product model name	JSmart707
year/week of production	1920
serial number	AA00012P9000000561AA
manufacturer address	Exor International S.p.A. Via Monte Fiorino 9 IT-37057 San Giovanni Lupatoto (VR)

Ordering code key

Example: +JS707BB1U5P1

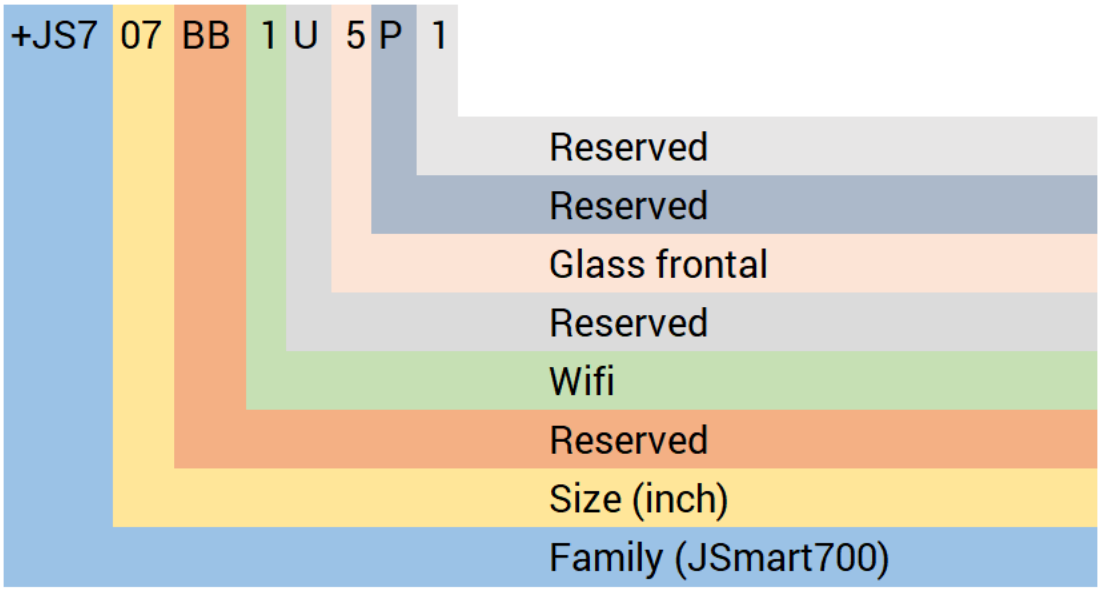

© 2019-2020 EXOR International S.p.A. - Subject to change without notice

3 Technical Specifications

Touchscreen technology	Projected capacitive - Multitouch	
Back-up battery	3V 7mAh Vanadium-Lithium, rechargeable, not user-replaceable, model VL1220.	
Flash	4GB (8GB for JSmart715 and JSmart721)	
RAM	1GB (2GB for JSmart715 and JSmart721)	
Hardware clock	Clock/Calendar with back-up battery	
Accuracy RTC (at 25°C)	<100ppm	

Environmental conditions

Operating temperature (surrounding air temperature)	-20 ÷ +55°C (vertical installation)	EN 60068-2-14
Storage temperature	-30 ÷ +80°C (JSmart707, 710) -20 ÷ +70°C (JSmart715, 721)	EN 60068-2-1 EN 60068-2-2 EN 60068-2-14
Operating and storage humidity	5 ÷ 85 % RH not-condensing	EN 60068-2-30
Vibrations	5 ÷ 9 Hz, 7 mm $_{p-p}$ 9 ÷ 150 Hz, 1 g	EN 60068-2-6
Shock	± 50 g, 11 ms, 3 pulses per axis	EN 60068-2-27
Protection class	IP67 (requires appropriate connectors and cables)	EN 60529

Electromagnetic Compatibility (EMC)

Radiated disturbance test	Class A	CISPR 22 CISPR 16-2-3
Electrostatic discharge immunity test	8 kV (air electrostatic discharge) 4 kV (contact electrostatic discharge)	EN 61000-4-2
Radiated, radio-frequency, electromagnetic field immunity test	80 MHz ÷ 1 GHz, 10V/m 1,4 GHz ÷ 2 GHz, 3 V/m 2 GHz ÷ 2.7 GHz, 1 V/m	EN 61000-4-3
Burst immunity test	± 2 KV dc power port ± 1 KV signal line	EN 61000-4-4
Surge immunity test	± 0,5 KV dc power port (line to earth) ± 0,5 KV dc power port (line to line) ± 1 KV signal line (line to earth)	EN 61000-4-5
Immunity to conducted disturbances inducted by radiofrequency field	0.15 ÷ 80 MHz, 10V	EN 61000-4-6
Power frequency magnetic field immunity test	Enclosure, 50/60Hz, 30A/m	EN 61000-4-8

© 2019-2020 EXOR International S.p.A. - Subject to change without notice

3 Technical Specifications

Durability information

Backlight service life (LED type)	40000 Hrs. or more (Time of continuos operation until the brightness of the backlight reaches 50% of the rated value when the surrounding air temperature is 25°C) - see Note 1

Note 1: Extended use in environments where the surrounding air temperature is 40°C or higher may degrade backlight quality/reliability/durability.

Viewing angles

For the viewing angles values (U,D,R,L) of the display types, see the technical data of the respective device.

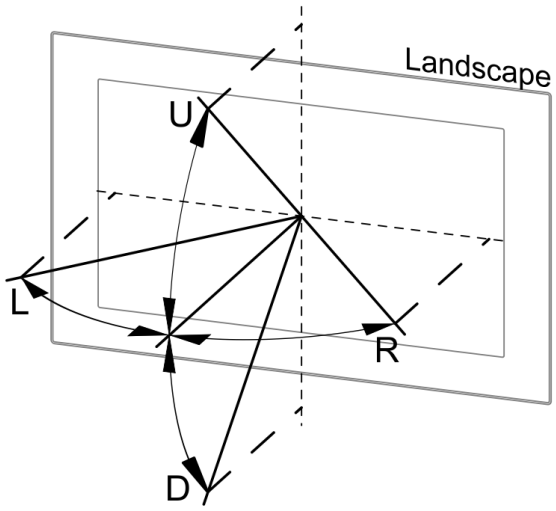

Legend:	Display viewing angle
U	From top
D	From bottom
L	From left
R	From right

The viewing angles are specified for the horizontal (L,R) and vertical (U,D) axes in reference to the vertical axis of the display. The specified viewing angles above always refer to the standard mounting orientation.

© 2019-2020 EXOR International S.p.A. - Subject to change without notice

3 Technical Specifications

Surface resistance

Chemical resistance of the front glass for an exposure time of 24 hours without visible changes:
- Betadine (10% Povidone Solution)
- Cola
- Electrode Gel/Paste
- Hydrogen Peroxide (3% Solution)
- NaCl (0.9% Solution)
- Coffee
- Dextrose (5% Glucose Solution)
- Hydrogen chloride (0.5% Solution PH=1)
- Isopropyl Alcohol
- Sodium Hypochlorit
- Ethyl Alcohol (70%-90%)
- Quaternary ammonium compound

© 2019-2020 EXOR International S.p.A. - Subject to change without notice

3 Technical Specifications

Properties multitouch PCAP touchscreen

Number of fingers	5
Glove operation	Yes
Passive stylus pens	Yes
Active stylus pens	No
Hardened front glass	Yes

Operation with gloves

Projected capacitive touch screens (PCAP) are suitable for operation with or without gloves.
A large number of gloves (rubber gloves, light/heavy leather gloves, disposable latex gloves, etc.) are supported.
Due to the variety of commercially available gloves, however, EXOR cannot guarantee all types.

© 2019-2020 EXOR International S.p.A. - Subject to change without notice

4 Technical Data

Model	JSmart707	JSmart710	JSmart715
Display / Backlight	TFT Color / LED	TFT Color / LED	TFT Color / LED
Colors	16M	16M	16M
Resolution	1024X600	1280X800	1366X768
Diagonal (inches)	7" widescreen	10.1" widescreen	15.6" widescreen
Viewing angles horizontal	Direction L / Direction R Typ. 75°	Direction L / Direction R Typ. 85°	Direction L / Direction R Typ. 80°
Viewing angles vertical	Direction U / Direction D Typ. 75°	Direction U / Direction D Typ. 85°	Direction U / Direction D Typ. 80°
Dimming	yes to 0%	yes to 0%	yes
CPU	ARM Cortex-A9 dual core 800 MHz	ARM Cortex-A9 dual core 800 MHz	ARM Cortex-A9 quad core 800 MHz
Operating System	Linux RT	Linux RT	Linux RT
Flash	4GB	4GB	8GB
RAM	1GB	1GB	2GB
Ethernet port	10/100 PoE 802.3af/at	10/100 PoE 802.3af/at	10/100 PoE 802.3af/at
USB port	1 (Host v. 2.0, request special connector)	1 (Host v. 2.0, request special connector)	1 (Host v. 2.0, request special connector)
Battery	rechargeable	rechargeable	rechargeable
Real Time Clock	yes	yes	yes
Power supply	802.3af	802.3af	802.3at
Current consumption	12W	14W	23W
Weight	0.7 Kg	1.2 Kg	4.0 Kg

© 2019-2020 EXOR International S.p.A. - Subject to change without notice

4 Technical Data

Model	JSmart721
Display / Backlight	TFT Color / LED
Colors	16M
Resolution	1920X1080
Diagonal (inches)	21.5" widescreen
Viewing angles horizontal	Direction L / Direction R Typ. 89°
Viewing angles vertical	Direction U / Direction D Typ. 89°
Dimming	yes
CPU	ARM Cortex-A9 quad core 800 MHz
Operating System	Linux RT
Flash	8GB
RAM	2GB
Ethernet port	10/100 PoE 802.3af/at
USB port	1 (Host v. 2.0, request special connector)
Battery	rechargeable
Real Time Clock	yes
Power supply	802.3bt
Current consumption	35W
Weight	6.0 Kg

© 2019-2020 EXOR International S.p.A. - Subject to change without notice

4 Technical Data

4.1 Dimensions

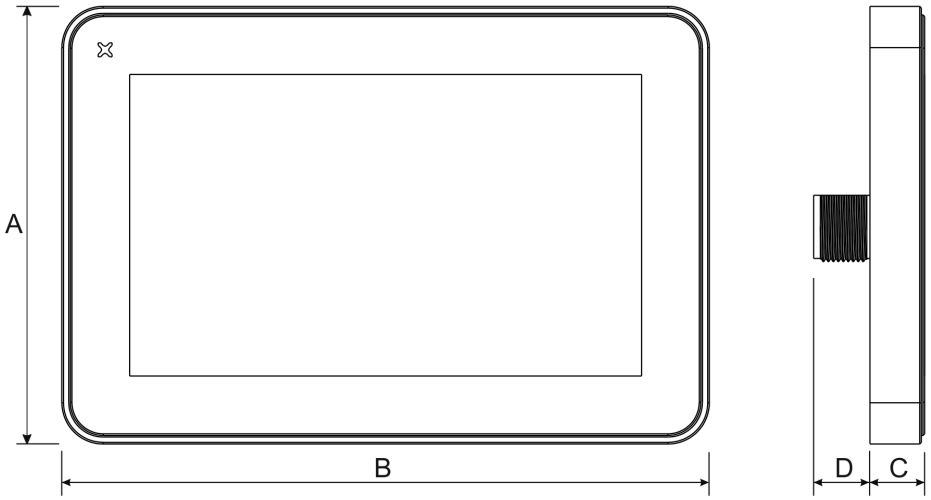

MODEL	A	B	C	D
JSmart707	131.6mm/5.18”	195.2mm/7.68”	16,5mm/0.64”	17mm/0.66”

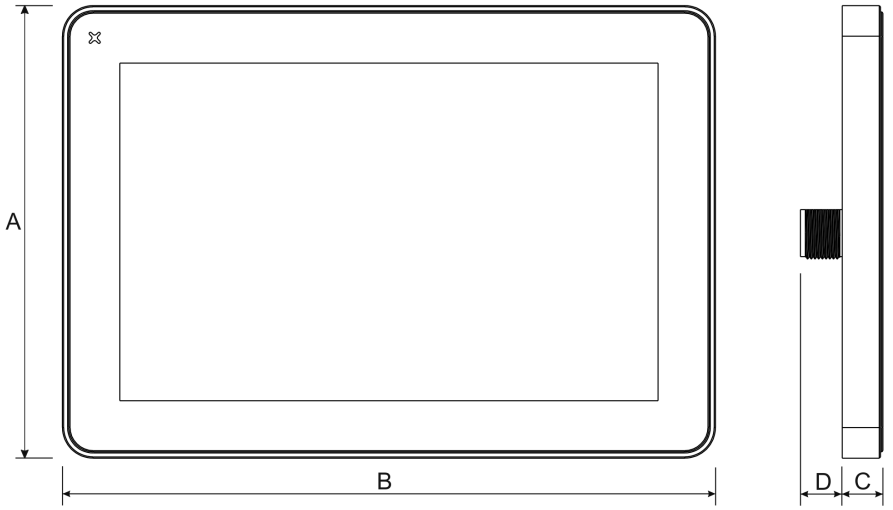

MODEL	A	B	C	D
JSmart710	183.1mm/7.20”	264.5mm/10.41”	16,5mm/0.64”	17mm/0.66”

© 2019-2020 EXOR International S.p.A. - Subject to change without notice

4 Technical Data

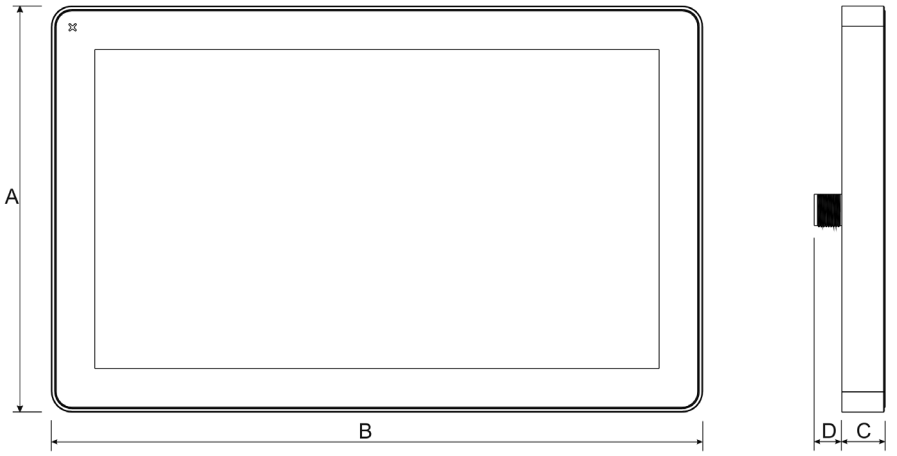

MODEL	A	B	C	D
JSmart715	248mm/9.76”	398.6mm/15.69”	26,5mm/1.04”	17mm/0.66”

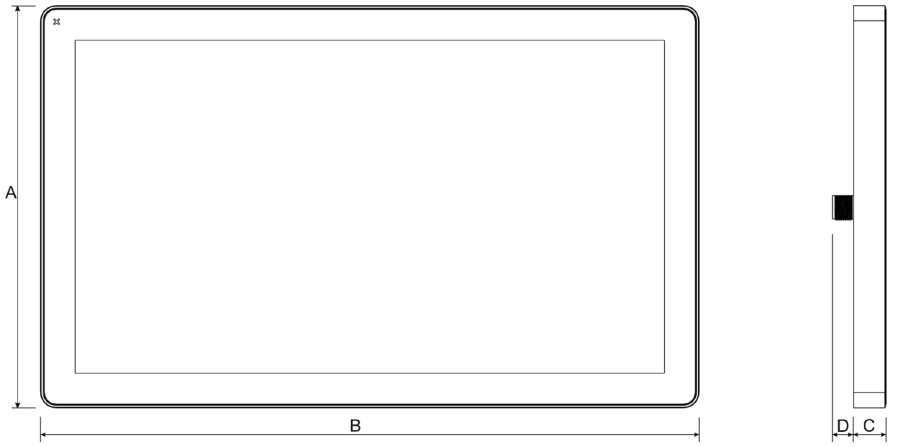

MODEL	A	B	C	D
JSmart721	325.6mm/12.81”	534.1mm/21.02”	26,5mm/1.04”	17mm/0.66”

© 2019-2020 EXOR International S.p.A. - Subject to change without notice

4 Technical Data

Rear view

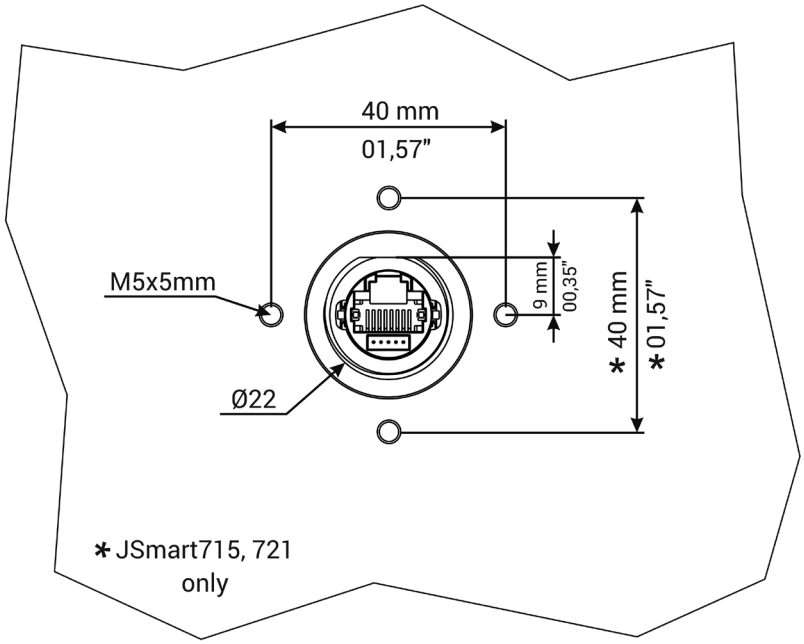

© 2019-2020 EXOR International S.p.A. - Subject to change without notice

4 Technical Data

4.2 Installation Environment and procedure

Avoid prolonged exposition to direct sunlight to avoid the risk of overheating the device.

The equipment is not intended for installation in contact with corrosive chemical compounds. Check the resistance of the front panel to a specific compound before installation.

Do not use tools of any kind (screwdrivers, etc.) to operate the touch screen of the panel.

IP67 is guaranteed only if a JSCAxxxx cable is used and if:
• max deviation from the plane surface to the cut-out: ≦0.5mm
• thickness of the case where is mounted the equipment: from 1,5mm to 3mm
• max surface roughness where the gasket is applied: ≦120 um

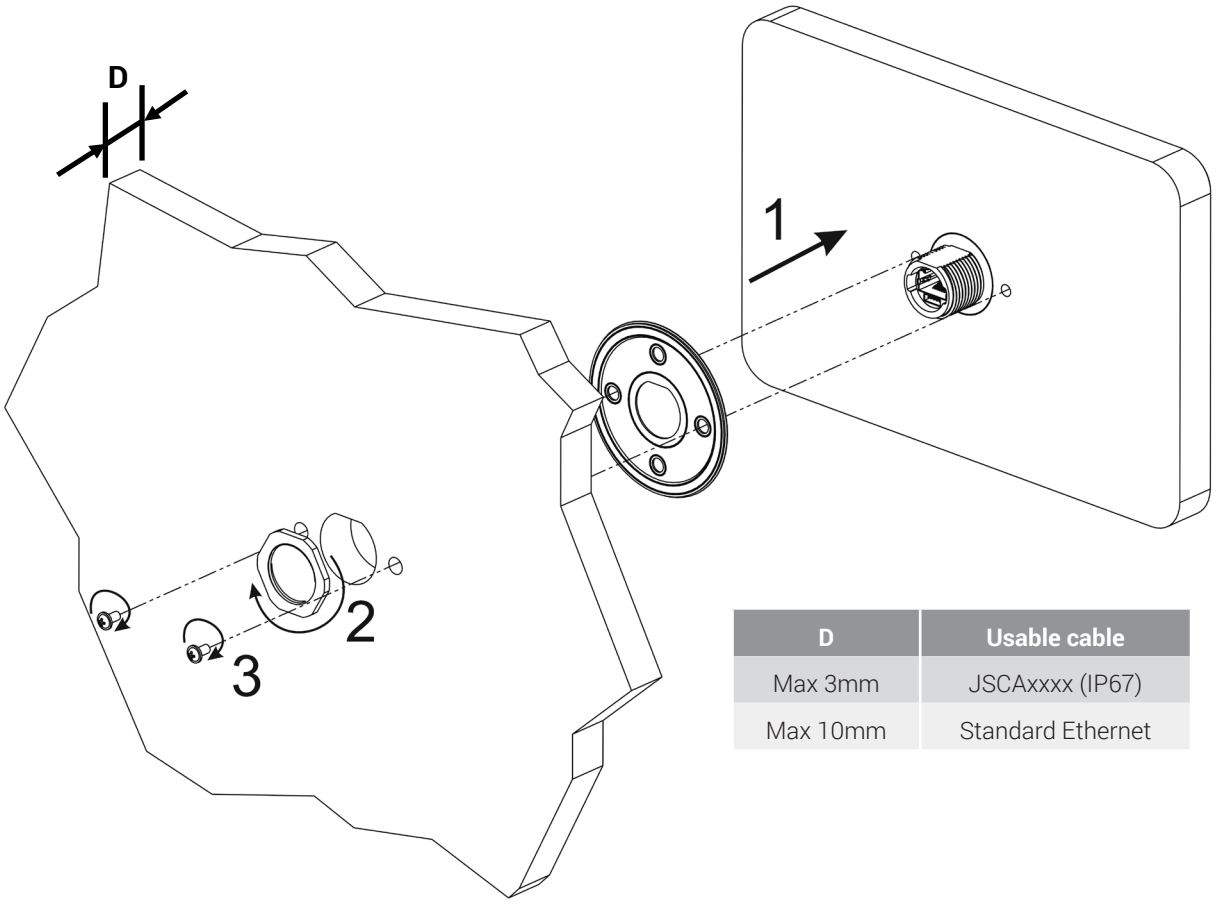

D	Usable cable
Max 3mm	JSCAxxxx (IP67)
Max 10mm	Standard Ethernet

CAUTION
Tightening torque: 1000Ncm for nut, 130Ncm for screws

© 2019-2020 EXOR International S.p.A. - Subject to change without notice

4 Technical Data

4.3 Safety instruction



For all installation notes, please refer to the Installation Guide provided with the product.

© 2019-2020 EXOR International S.p.A. - Subject to change without notice

5 Connections

5.1 Ethernet Port

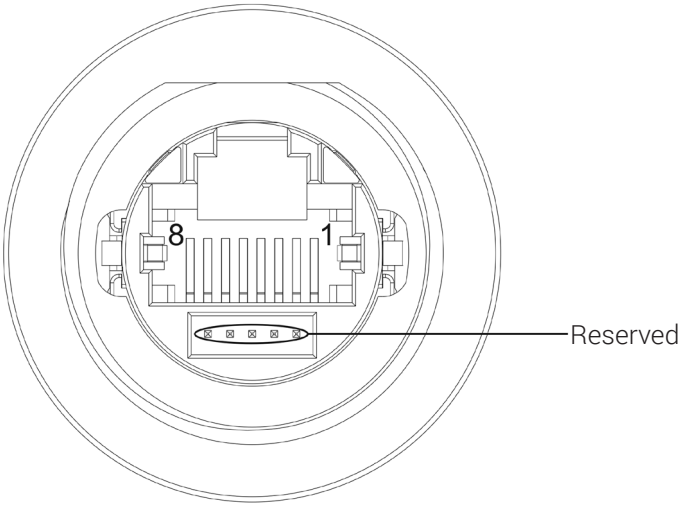

Pin	Description
1	TX+
2	TX-
3	RX+
4	n/c
5	n/c
6	RX-
7	n/c
8	n/c

The Ethernet port have two status indicators. Please see description in figure.

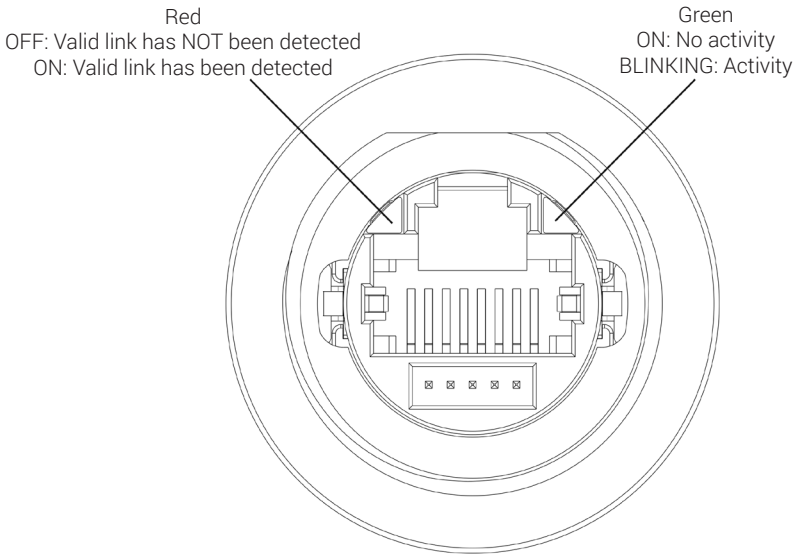

© 2019-2020 EXOR International S.p.A. - Subject to change without notice

6 Power Supply, Grounding and Shielding

The power supply terminal block is shown in the figure below.

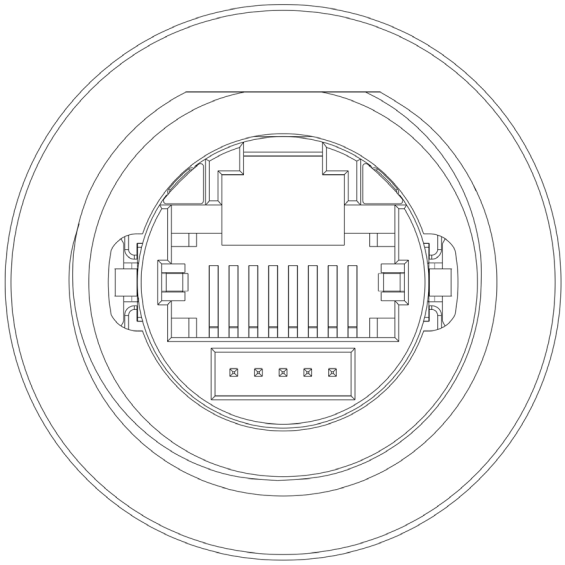

Fig. 6.1

Use a shielded CAT 5 cable or higher

Note: *Ensure that the power supply has enough power capacity for the operation of the equipment.*

The unit must always be grounded to earth with shielded CAT 5 cable. Grounding helps limit the effects of noise due to electromagnetic interference on the control system.

The earth connection can also be made using the screws located near the connector. A label helps identify the ground connection.

All the electronic devices in the control system must be properly grounded. Grounding must be performed according to applicable regulations.

© 2019-2020 EXOR International S.p.A. - Subject to change without notice

7 Battery

These devices are equipped with rechargeable Lithium battery, not user-replaceable.
The following information is maintained by the battery:
• hardware real-time clock (date and time)

Charge:
At first installation must be charged for 48 hours.
When the battery is fully charged, it ensures a period of 3 months of date and time back-up at 25°C.

Battery

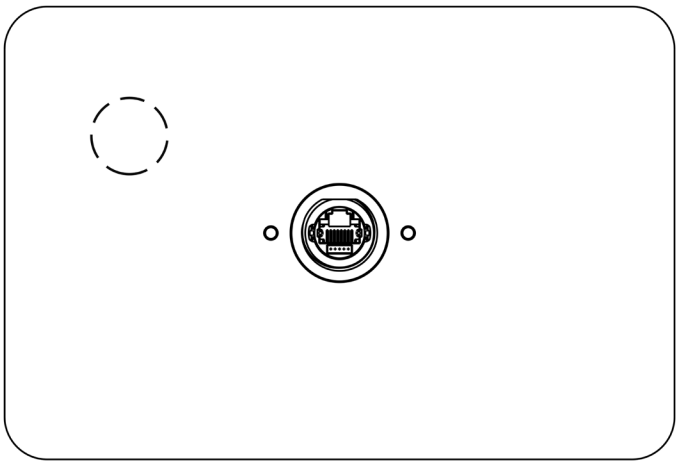

Fig. 7.2: JSmart707

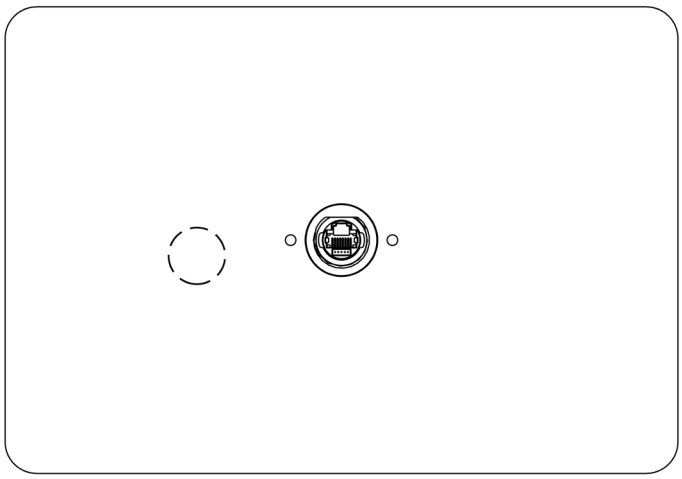

Fig. 7.3: JSmart710

© 2019-2020 EXOR International S.p.A. - Subject to change without notice

7 Battery

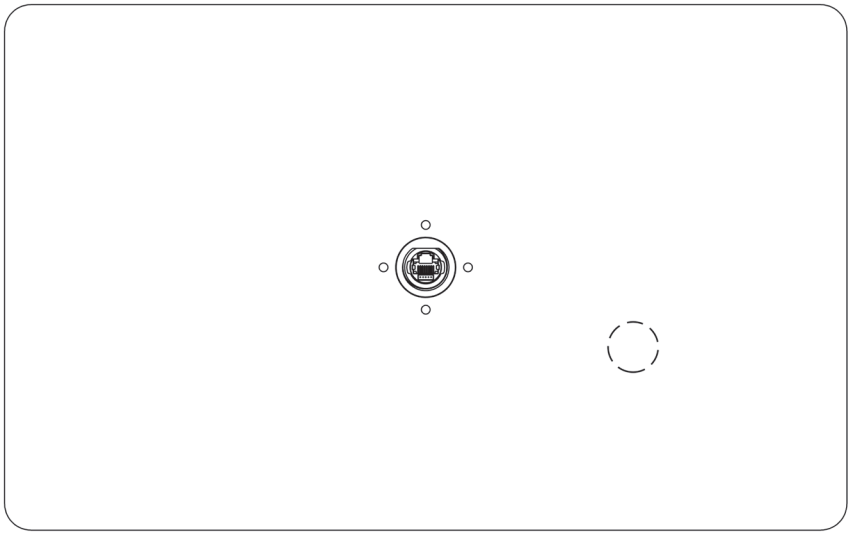

Fig. 7.4: JSmart715

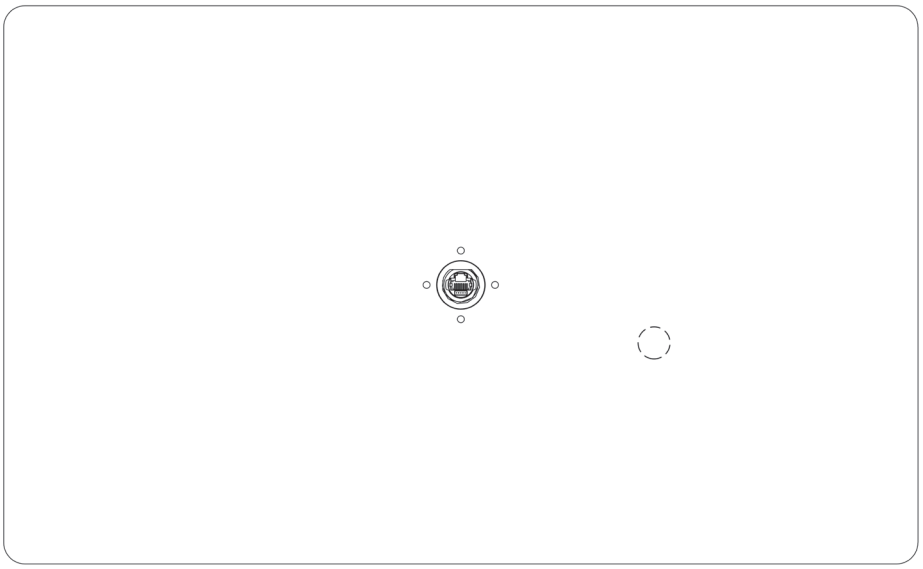

Fig. 7.5: JSmart721

ATTENTION
Dispose of batteries according to local regulations.

ATTENTION
This device cannot be disposed of as a domestic waste but according to WEEE European Directive 2012/19/EU

© 2019-2020 EXOR International S.p.A. - Subject to change without notice

8 Special Instruction for Use

- The equipment shall only be used in an area of not more than pollution degree 2, as defined in IEC/EN 60664-1.
- The equipment shall be installed in an enclosure that provides a degree of protection not less than IP 54 in accordance with IEC/EN 60079-15.
- Transient protection shall be provided that is set at a level not exceeding 140 % of the peak rated voltage value at the supply terminals to the equipment.
- Install the HMI device according to the accompanying installation instructions.
- Ground the HMI device according to the accompanying installation instructions.
- Only qualified personnel may install the HMI device or repair it.
- Care shall be taken not to allow layers of dust to form on the graphic panel in a way that might cause the accumulation of static charges. Keep the faceplate of the HMI device clean: the equipment must be cleaned only with a soft cloth and neutral soap product. Do not use solvents.
- This device should not be used for purposes and methods other than indicated in this document and in the documentation accompanying the product.

9 Getting Started

JSmart 700 HMI products delivery configuration is based on a loader. Use the services of the loader to install applications on the device such as JMobile runtime or browsers.
JMobile Studio version V2.6 or higher is required. JMobile Studio is a software tool that must be properly installed on a computer running Microsoft Windows.

There are two options to transfer a JMobile application project to a HMI device:

Ethernet	Connect the HMI device to the computer with an Ethernet network. In JMobile Studio select the command Run/Download to target. You may have to ensure that the proper firewall policy has been configured in the computer to allow JMobile Studio to access the network.
USB	Create an Update Package using JMobile Studio and copy it to a USB Flash drive (to transfer via USB, use the dedicated accessory cable).

© 2019-2020 EXOR International S.p.A. - Subject to change without notice

10 System Settings

JSmart 700 HMI products have a system settings interface to allow configuration of system options. The user interface of System Settings is based on HTML pages accessible from the HMI screen or remotely using a Web browser Chrome v44 or higher using port 443. To connect enter the address https://IP/machine_config where IP is the IP address of the HMI device. Default username is “admin”, default password is “admin”. Use navigation menu on the left side of the screen to browse through the available options.

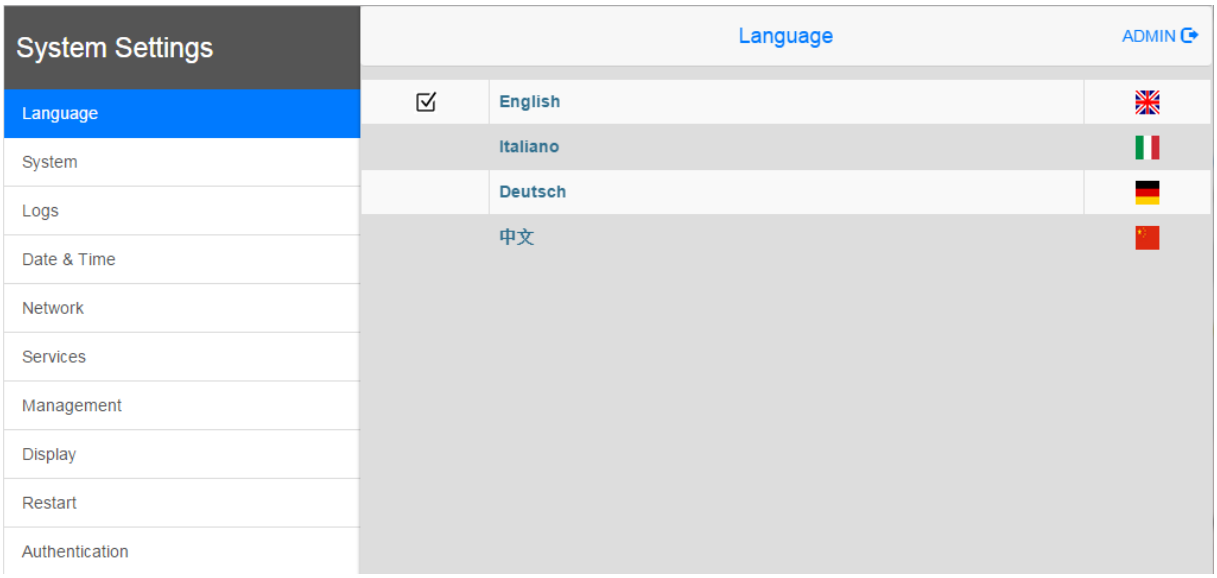

The active item of menu is highlighted on the left side of the screen. The right side shows related information and settings. Depending on the size of the HMI screen, both menu and content of selected item may be shown on screen at the same time or not.

System Settings has two modes of operation:

User Mode JMobile runtime is running or the HMI device is in “factory default” status.
System Mode JMobile runtime is not running or the HMI device has a software failure. System Mode includes all options available in User Mode and additionally includes commands dedicated to system upgrade and recovery not available when running in User Mode.

Activation of System Settings in **User Mode**:

Factory default status JMobile runtime running	Press “System Setting” button on the HMI screen Recall context menu and select “System Settings”. To recall the context menu click and hold any unused area of the touchscreen for a few seconds. Default hold time is 2 seconds.

© 2019-2020 EXOR International S.p.A. - Subject to change without notice

10 System Settings

Activation of Systems Settings in **System Mode**:

Normal operation	If JMobile runtime is not running: Press “System Setting” button on the device screen to recall System Settings in User Mode. Select “Restart” -> “Config OS” to reboot in System Mode. If JMobile runtime is running: recall context menu and select “System Settings”. To recall the context menu click and hold any unused area of the touchscreen for a few seconds. Default hold time is 2 seconds to enter in System Settings in User Mode. Select “Restart” -> “Config OS” to reboot in System Mode.
Recovery operation	If device is not responsive, use the so-called “tap-tap” procedure. This procedure consists in tapping the surface of the touchscreen during the device power-up phase. Tapping frequency must be high. You have to start tapping the touchscreen as soon as power has been applied to the device. When the sequence has been recognized, the system shows the message: “TAP-TAP DETECTED”. At this point release touch to boot in User Mode without running JMobile runtime or press and hold few seconds (selecting so “RESTART: CONFIG OS”) to boot in System Mode.

System Settings includes options for basic settings of the device:

Language	Configure language used for System Setting menu only.
System	Show information about platform, status and timers (like System on time, backlight on time).
Logs	Enable persistent log for BSP and allows exporting it.
Date & Time	Change the device date and time, including time zone and NTP Server
Network	Configure IP Address of Ethernet interface and the other network settings like DNS, Gateway, DHCP, Hostname, routing and bridging.
Services	Enable/disable services. Examples of services are: OpenSSH server, Bridge, Cloud, Router, SNMP and logging.
Management	Update of BSP components (Main OS, Config OS, Boot loader, XLoader), check for partitions consistence, update of splash screen, information about usage and size of partitions. The update of Main OS is available only in System Mode, the update of Config OS is only in User Mode.
Display	Adjust display brightness, configure automatic backlight turnoff and select HMI orientation (90°, 180°, 270° and 360°).
Restart	Restart the device. “Main OS” option restarts the device in User Mode, “Config OS” option restarts the device in System Mode showing System Settings.
Authentication	Configure password for administrator (“admin”) and for the standard user (“user”). Administrator has full access to System Settings (updates of BSP and other system components). Standard user has some limitations.

Note: *Additional informations on System Settings are available in dedicated manual.*

© 2019-2020 EXOR International S.p.A. - Subject to change without notice

11 Unpacking and Packing Instructions

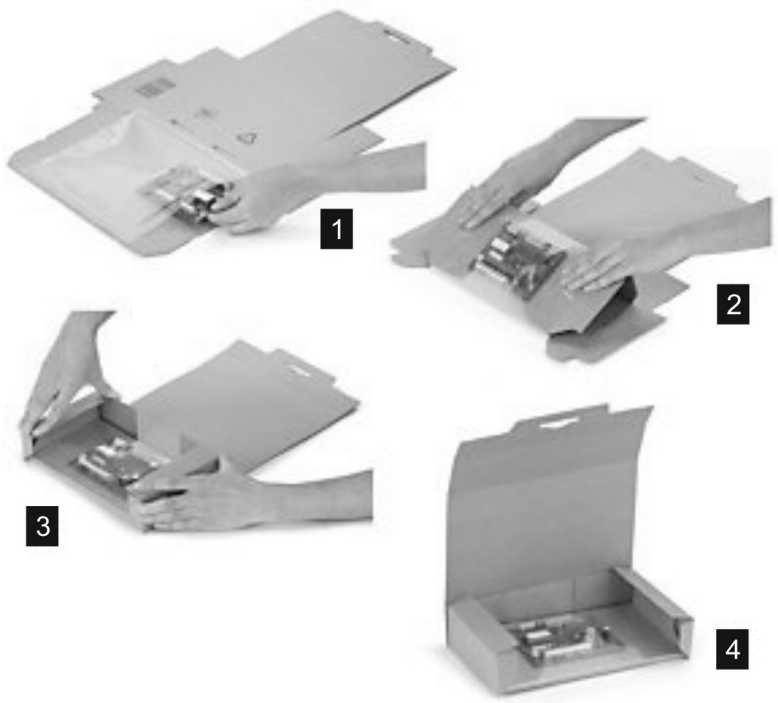

Fig. 11.1: JSmart707, JSmart710

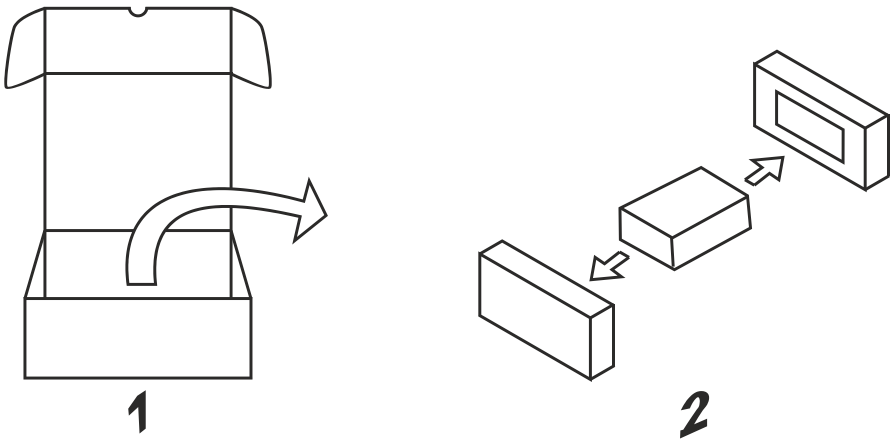

Fig. 11.2: JSmart715, JSmart721

To repack the unit, please follow the instructions backwards.

© 2019-2020 EXOR International S.p.A. - Subject to change without notice