Hybrid Inverter User Manual

Three-phase
TriP2-HB-3P 6-30K

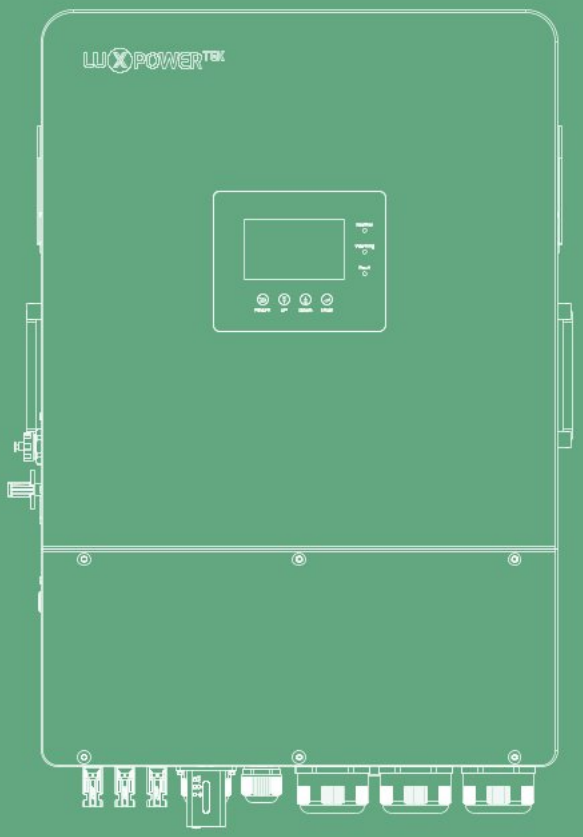

LUXPOWERTEK

Version: UM-TRIP02001E

Copyright© 2026 Lux Power Technology Co., Ltd. All Rights Reserved. This manual, protected by the copyright and intellectual property rights of Lux Power Technology. No part of this document may be modified, copied, or reproduced without prior written permission.

All brands and trademarks mentioned belong to their respective owners.

Please read carefully to understand product reliability and warranty eligibility. For detailed warranty information, refer to the Lux Power Technology Co., Ltd Warranty. This manual is intended for professional service providers. Nothing in this document constitutes an express or implied warranty.

Descriptions may include forward-looking statements. Actual conditions may differ. This document is provided for reference only and is subject to change without notice by Lux Power Technology Co., Ltd.

Website

YouTube

Facebook

www.luxpowertek.com

TriP2-HB-3P 6-30k

Scan to download

Table of Contents

1. Introduction 01
1.1 Overview 01
1.2 Symbol Conventions 01
2. Safety 01
2.1 Safety Statements 01
2.2 Important Safety Notifications 02
3. Product Introduction 03
3.1 Function Overview 03
3.2 Model Description 04
3.3 Exterior Description 05
3.4 Dimensions and Weight 05
4. Storage and Disassembly 06
4.1 Storage 06
4.2 Disassembly 06
5. System Installation 07
5.1 Precautions 07
5.2 Selecting Installation Location 07
5.3 Space Requirements 08
5.4 Installation Angle Requirements 08
5.5 Environmental Requirements 08
5.6 Moving the Inverter 09
5.7 Installing the Inverter 09
6. Electrical Connection 10
6.1 Precautions 10
6.2 Electrical System Connection Diagram 10
6.2.1 System System Connection Diagram 10
6.2.2 Electrical System Connection Diagram 11
6.3 Preparing the Breakers and Cables 11
6.4 Terminal Introduction 12
6.5 Grounding Connection 13
6.6 PV Input Line Connection 14
6.7 Battery Line Connection 15
6.8 AC Output Line Connection 16
6.9 Communication Line Connection 18
6.9.1 Battery Communication Cable Connection 18
6.9.2 CT Connection 19
6.9.3 Meter Communication Cable Connection 20
6.9.4 Parallel Communication Cable Connection 21

6.10 Dry Contact Connection 23
6.11 Installing the Communication Module 23
7. Operation Instructions 24
7.1 Indicator Lights and Button Introduction 24
7.2 Monitoring Connection 25
7.2.1 Setup the Monitor System 25
7.2.2 Create a Station and Add Dongle 26
7.2.3 Set Home WiFi Password for Dongle 26
7.3 LCD Interface Settings Introduction 27
7.4 Operating Mode Settings 29
7.4.1 Self-consumption Mode 29
7.4.2 Charge First Mode 32
7.4.3 Forced Charge Mode & Forced Discharge Mode 33
7.4.4 Off-grid Mode 35
7.5 GEN Port Function 37
7.5.1 Working with a Generator 37
7.5.2 AC Coupling 39
7.5.3 Smart Load 40
7.6 Grid Peak-shaving Function 41
7.6.1 Setting Parameters 42
7.6.2 Charge setting 42
7.6.3 Discharge setting 44
7.6.4 Advanced setting 44
7.7 Other 46
7.7.1 Self-test 46
7.7.2 Automatic Limitation of Active Power Near Overvoltage Condition 47
8. System Maintenance 48
8.1 Startup and Shutdown the Inverter 48
8.2 Regular Maintenance 48
8.3 Troubleshooting 49
8.3.1 Fault on the LCD 49
8.3.2 Fault Message & Troubleshooting are given below 50
8.3.3 Alarm on the LCD 52
8.3.4 Alarm Message & Troubleshooting are given below 53
8.4 Replacement of the Fan 55
9. Annex 56
9.1 Technical Data 56

1. Introduction

1.1 Overview

This manual furnishes comprehensive product insights and step-by-step installation instructions for the TriP2 HB-3P 6-30K series photovoltaic grid-tied energy storage inverter, henceforth referred to as "the inverter," crafted by Shenzhen Lux Power Technology Co., Ltd., hereinafter denoted as "LuxpowerTek." We kindly urge you to meticulously peruse this manual before engaging with the product and ensure its secure storage in a readily accessible location.

1.2 Symbol Conventions

The following symbols used in this document have the following meanings:

DANGER	WARNING	CAUTION	NOTICE
This symbol indicates situations of extreme danger. Disregarding these warnings could result in severe injury or even fatality for individuals.	This symbol indicates situations of moderate danger. Failure to heed these warnings could result in significant injury or even fatality for personnel.	This symbol indicates situations of mild danger. Failure to take necessary precautions could result in minor or moderate injuries for personnel.	This symbol indicates potential hazards. Overlooking these warnings could result in equipment malfunction or damage to property.

The symbols present on the nameplate of the HYBRID inverter convey the following meanings:

	Surface Temperature Warning. The inverter may produce heat while in operation. Avoid touching.
	High Voltage Warning. The inverter contains high internal voltage, presenting a life-threatening hazard.
	Electric Shock Warning.
	High Voltage Warning. Before performing any operations, ensure that the residual voltage within the inverter is discharged for a duration of 5 minutes.
	Please adhere to the documents attached.

2. Safety

2.1 Safety Statements

This inverter has been designed in strict accordance with international safety regulations. Prior to installation, operation, and maintenance, it is essential to read this manual thoroughly and adhere to all safety precautions indicated on the device and within the manual.

When installing, operating, and maintaining this inverter, it is mandatory to comply with local laws, regulations, and standards. The safety precautions outlined in the manual are intended as supplementary to local laws, regulations, and standards.

This inverter should be utilized exclusively within an environment that meets the specified design requirements. Failure to do so may lead to equipment malfunctions, abnormal device functionality, component damage, personal safety incidents, property losses, etc. Such issues fall outside the scope of the equipment warranty.

2.2 Important Safety Notifications

Before, during, and after installation, as well as throughout subsequent operation and maintenance, it is crucial to communicate numerous safety considerations diligently. The following are essential safety notifications for operators, owners, and users to ensure the proper utilization of this product.

⚠ DANGER High Voltage and High Current Warning

- Pay attention to high PV voltage. Before and during installation, ensure the photovoltaic panel DC output switch is turned off to avoid electric shock.
- Be cautious of high battery output voltage. Before and during installation, ensure the battery module is turned off to avoid electric shock.
- Do not open the machine cover while the inverter is operational to prevent electrical shock or damage from live voltage and current.
- Do not perform any operations while the inverter is active. Under limited circumstances, qualified personnel should only interact with the LCD and buttons.
- When the inverter is operational, do not connect or disconnect any connections (PV input, battery, PV output, communication, etc.).
- Ensure proper grounding of the inverter. Operators should employ appropriate and professional insulation measures (e.g., Personal Protective Equipment - PPE) for their safety.
- Prior to installation, operation, or maintenance, inspect existing lines on-site for integrity.
- During installation, verify the connections between the inverter and PV, battery, and grid to prevent damage or harm resulting from poor connections.
- Before performing maintenance operations, turn off the AC breaker on the grid side, then switch off the battery and disconnect the battery breaker. Finally, turn off the PV DC breaker and check the inverter status until its indicator lights are off.
- After the equipment has been de-energized for 5 minutes and inspected with detection equipment to ensure zero voltage and current, wear protective equipment to perform maintenance on the inverter.
- Even after the inverter is shut down, there's still a risk of burns. After the product has cooled down, wear protective gloves when interacting with it.

⚠ WARNING Avoid Misoperation and Improper Usage

- All aspects of this product's operation (system design, installation, operation, setup and configuration, maintenance, etc.) must be conducted by qualified personnel in accordance with requirements.
- All connections must comply with local and national regulations and standards.
- All warning labels or nameplates on the inverter must remain clearly visible, and they should not be removed, covered, or tampered with.
- During installation, select the appropriate location as per the manual's specifications, while also considering the safety of future user operations.
- Prevent children from touching or inadvertently operating the inverter and related systems.

- Exercise caution for potential burns, as specific parts of the inverter and system may generate heat during operation. Avoid touching the inverter's surface or most components while it is operational. When the device is functioning, only interact with the LCD and buttons.

CAUTION

- Only personnel with appropriate qualifications should be allowed to modify inverter settings.
- Due to potential health risks from radiation, avoid prolonged exposure within 20 centimeters of the device.

NOTICE

- Before performing any operations on this inverter, carefully read this manual. After installation, keep this manual stored safely for easy access when needed.
- Qualified personnel should undergo training in electrical system installation, debugging, and hazard handling, and should possess knowledge of this manual and other related documents. As installers or operators, they must be familiar with local regulations and directives.

3. Product Overview

3.1 Function Overview

The TriP2 HB-3P 6-30K series is a three-phase on-grid energy storage inverter designed to store DC power generated by photovoltaic string groups into batteries. It also has the capability to convert DC power from both photovoltaic panels and batteries into AC power, feeding it back into the grid or providing off-grid output to household loads. As a crucial component of photovoltaic power generation systems, this inverter plays a pivotal role. The typical application scenario is illustrated in the diagram below.

A. Solar and battery storage system

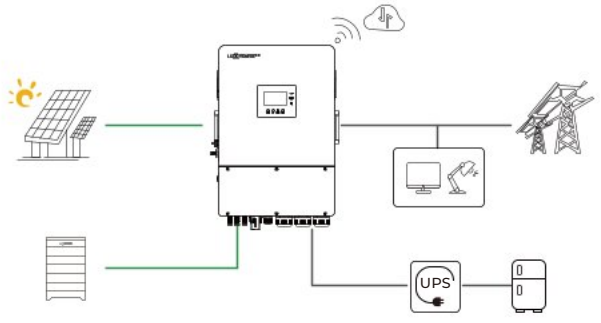

B. AC Coupling with existed solar system

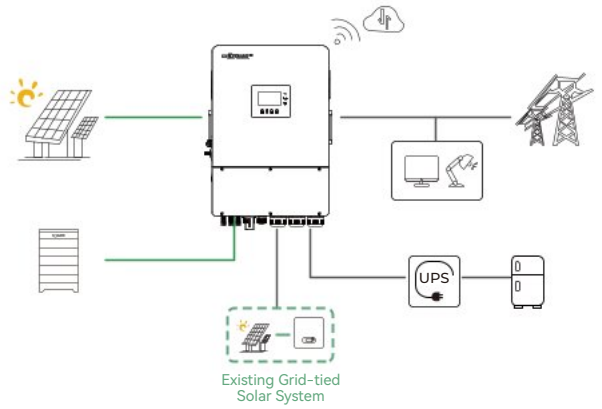

C. On-grid solar system without battery
(Support EPS Load even without battery)

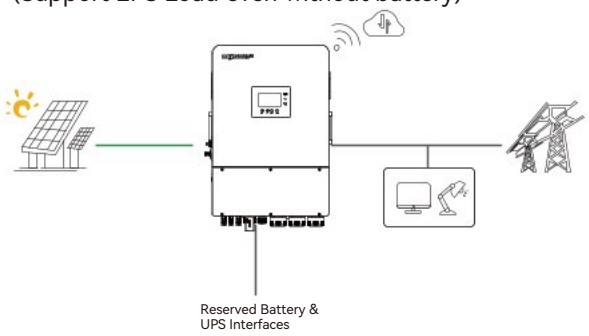

D. Off-grid and back-up applications

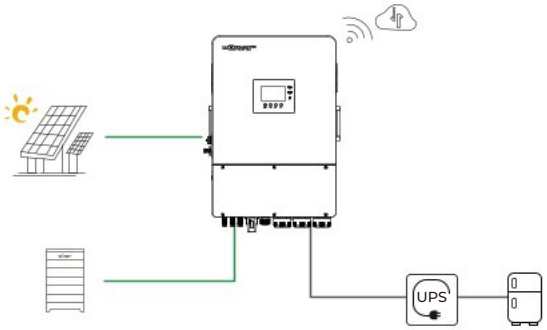

E. Three phase paralleling system

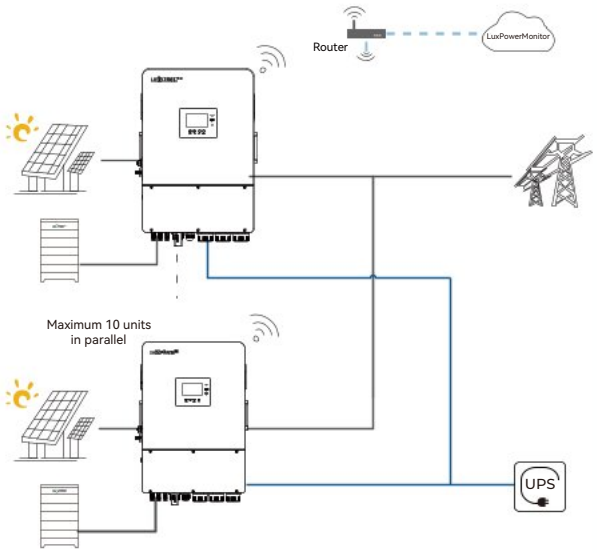

F. Energy storage system with peak shaving function

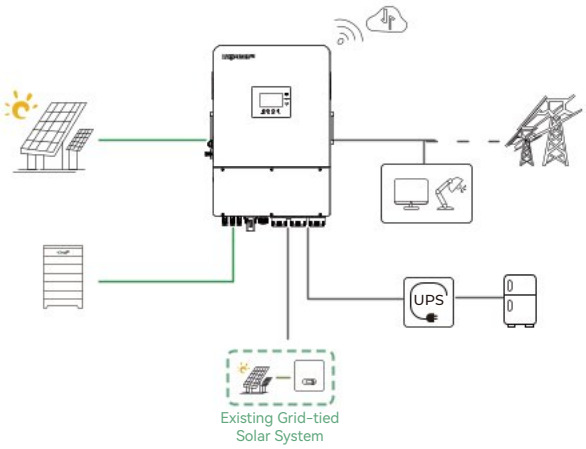

3.2 Model Description

This document is applicable to the following models of inverters.

TriP2-HB-3P 6K

TriP2-HB-3P 8K

TriP2-HB-3P 10K

TriP2-HB-3P 12K

TriP2-HB-3P 15K

TriP2-HB-3P 20K

TriP2-HB-3P 30K

3.3 Exterior Description

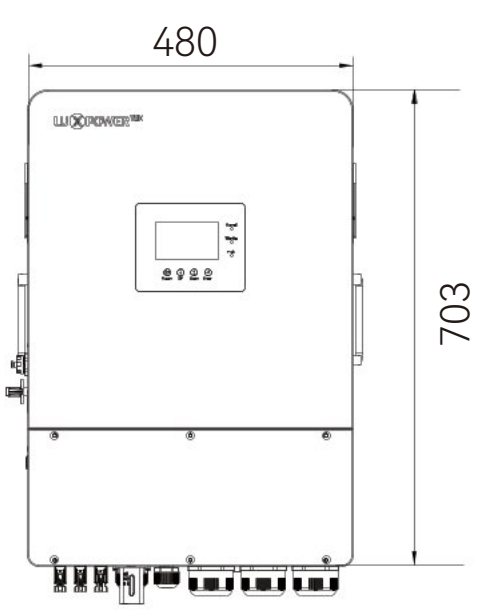

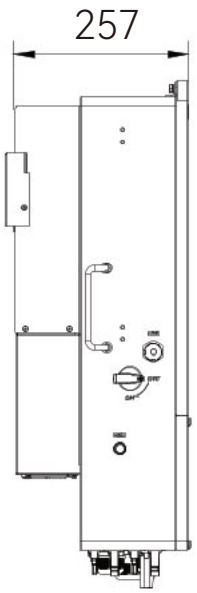

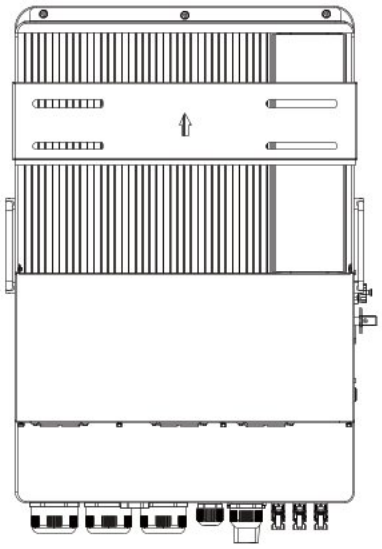

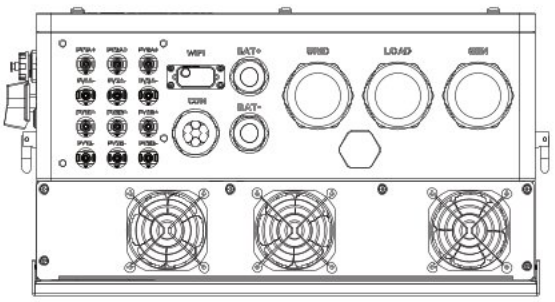

Model	Dimensions (W*H*D)	Weight
TriP2-HB-3P 6/8/10/ 12/15/20/30K	703*480*257mm	50KG

4. Storage and Disassembly

4.1 Storage

If the inverter is not to be immediately put into use, it should be stored in its original packaging box in a wel-ventiated and dry area.

The recommended storage temperature range is -25℃ to 60℃, and storage humidity should be maintained between 0% and 95%.

When multiple inverters need to be stacked for storage, the number of layers with packaging should not exceed the maximum stacking lavers' indicated on the outer box.



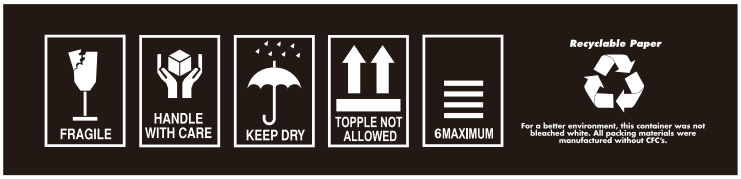

The packaging box must not be tilted or inverted. Regular inspections during storage, recommended every three months, are necessary. If any signs of insect infestation, rodent damage, or packaging deterioration are detected the packaging materials should be promptly replaced.

4.2 Disassembly

The equipment undergoes comprehensive testing and rigorous inspection before leaving the factory. However, damage may still occur during transportation. Therefore, it is essential to conduct a thorough examination of the packaging box for any signs of damage before signing for the product. Additionally, cross-reference the items received with the packing list to ensure completeness and conformity with the order.

Upon opening the packaging, inspect the inverter for any damage or missing components. In the event of damage or missing parts, kindly get in touch with the manufacturer. The packing list is provided below:

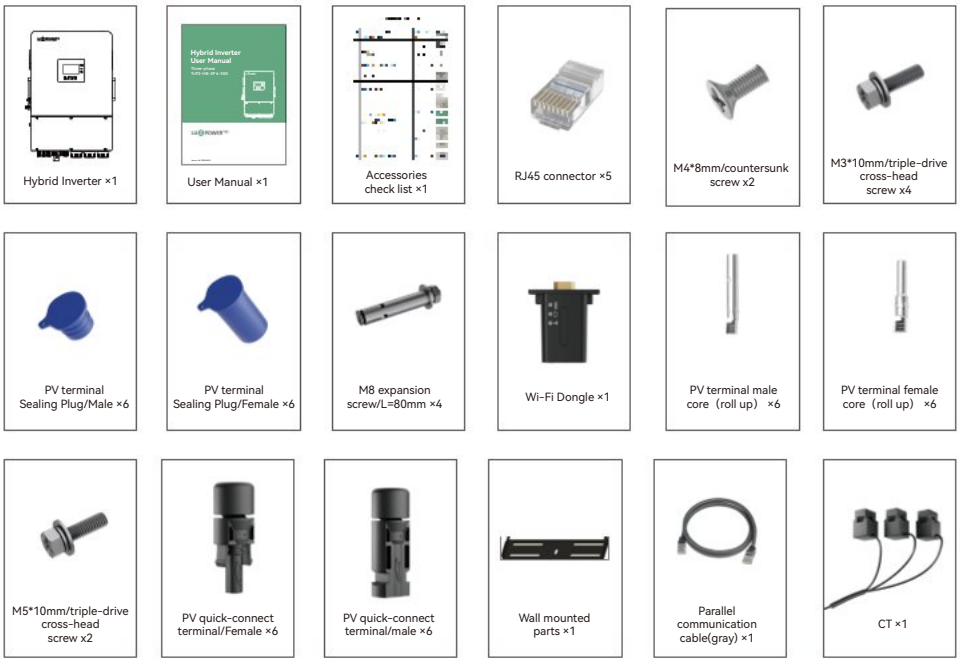

5. System Installation

5.1 Precautions

- The wall and bracket used for inverter installation must be robust and capable of supporting the inverter's weight over an extended period (refer to section 3.4 for weight specifications).
- The installation site should match the inverter's dimensions. When wall-mounted, ensure the installation avoids water and electrical lines within the wall.
- Avoid installing the inverter on structures made from flammable or heat-sensitive materials.
- The inverter, with an IP66 protection rating, is designed for installation in both indoor and outdoor environments.
- For specific installation requirements, please refer to the relevant sections.
- Choose an installation location that allows for convenient electrical connections, operation, and maintenance Position the inverter at least 30 meters away from third-party wireless communication facilities, residential areas and strong electromagnetic signals to ensure optimal performance and safety.

5.2 Selecting Installation Location

The inverters are designed for indoor and outdoor installation (IP66), to increase the safety, performance and lifespan of the inverter, please select the mounting location carefully based on the following diagrams:

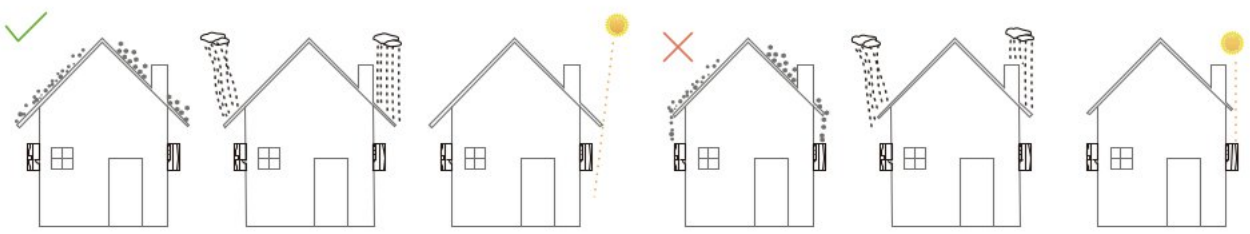

5.3 Space Requirements

To ensure the inverter operates effectively and allows convenient access for personnel, ensure there is ample space around the installation site. Please refer to the diagram below.

Avoid installing the inverter in locations easily accessible to children.

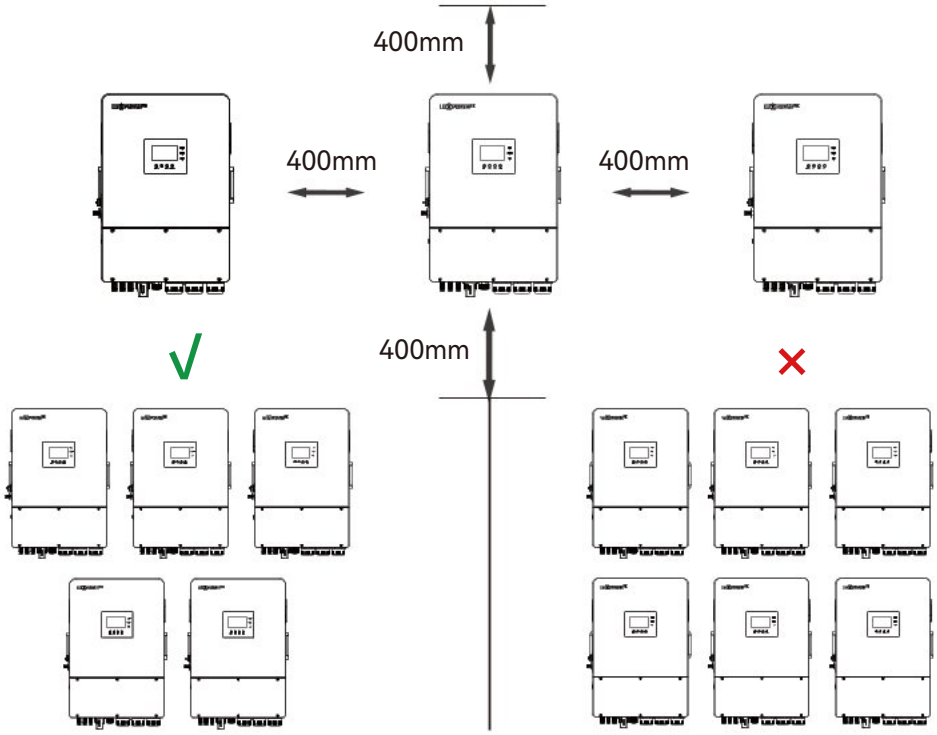

5.4 Installation Angle Requirements

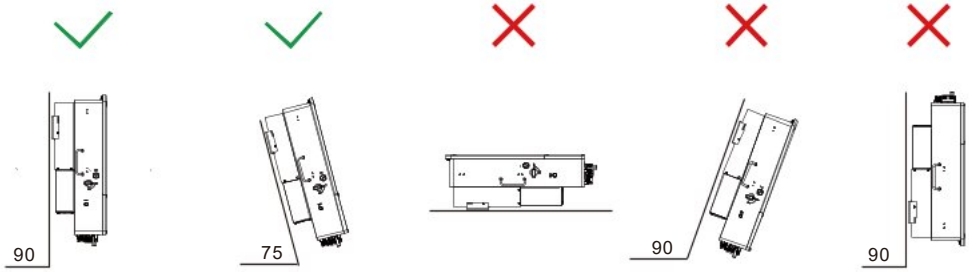

5.5 Environmental Requirements



Ensure proper ventilation in the inverter's installation environment.

Do not obstruct the air vents or heat dissipation system during operation to prevent overheating and the risk of fire. Prohibit placing the inverter in environments with flammable, explosive gases, or smoke, and strictly avoid any operations in such conditions

5.6 Moving the Inverter

> ⚠ CAUTION
>
> When manually handling the inverter, please be aware that it is relatively heavy: ensure that you can bear the weight before lifting.
> Before installation, transport the inverter to the designated installation location.
> The packaging box is labeled with indications for the front and bottom sides.

5.7 Installing the Inverter

Step 1. Install the wall bracket. Utilize the wall bracket as a template, drill holes in the wall based on the screw hole positions on the bracket, and then insert expansion bolts into the holes.

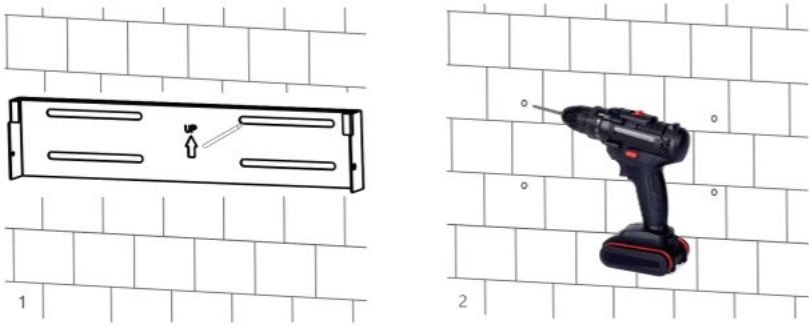

Step 2. Securely fasten the wall bracket to the wall using screws.

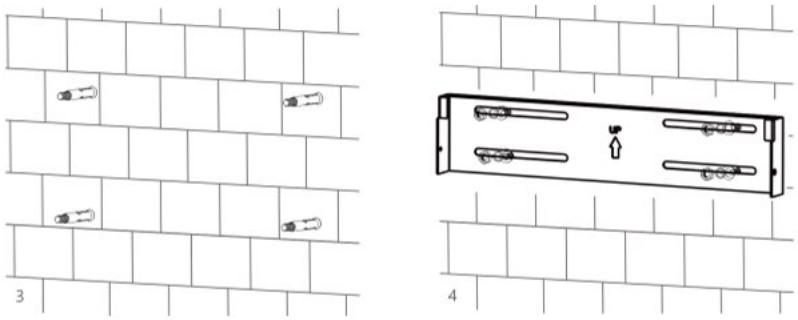

Step 3. Lift the inverter with two people and carefully place it onto the wall bracket.

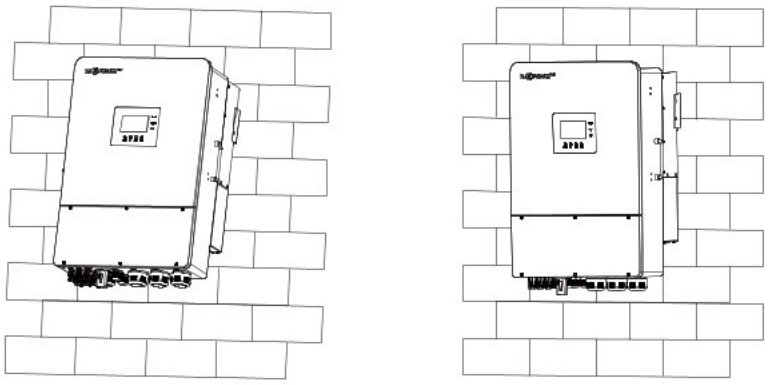

Step 4. Ensure the inverter is securely fixed and tighten all the fastening screws.

6. Electrical Connection

6.1 Precautions

During electrical operations, personnel with expertise must wear appropriate protective equipment

DANGER

- Caution: High voltage is present within the inverter!
- Warning: Photovoltaic strings exposed to sunlight can generate hazardous voltages.
- Do not close the circuit breaker until electrical connections are completed.
- Before conducting electrical connections, ensure that all cables are de-enerqized

WARNING

- Caution: Any improper operation during the wiring process may lead to equipment damage or personal injury.
- Wiring operations must be carried out exclusively by professional technicians.
- The cables used in the photovoltaic power generation system must be securely connected, in good condition well-insulated, and of the appropriate specifications.

CAUTION

- The wiring process must adhere to the pertinent safety instructions for photovoltaic strings
- All electrical installations must conform to the electrical standards of the country/region where the installation is conducted.

6.2 Electrical System Connection Diagram

6.2.1 System Connection Overview

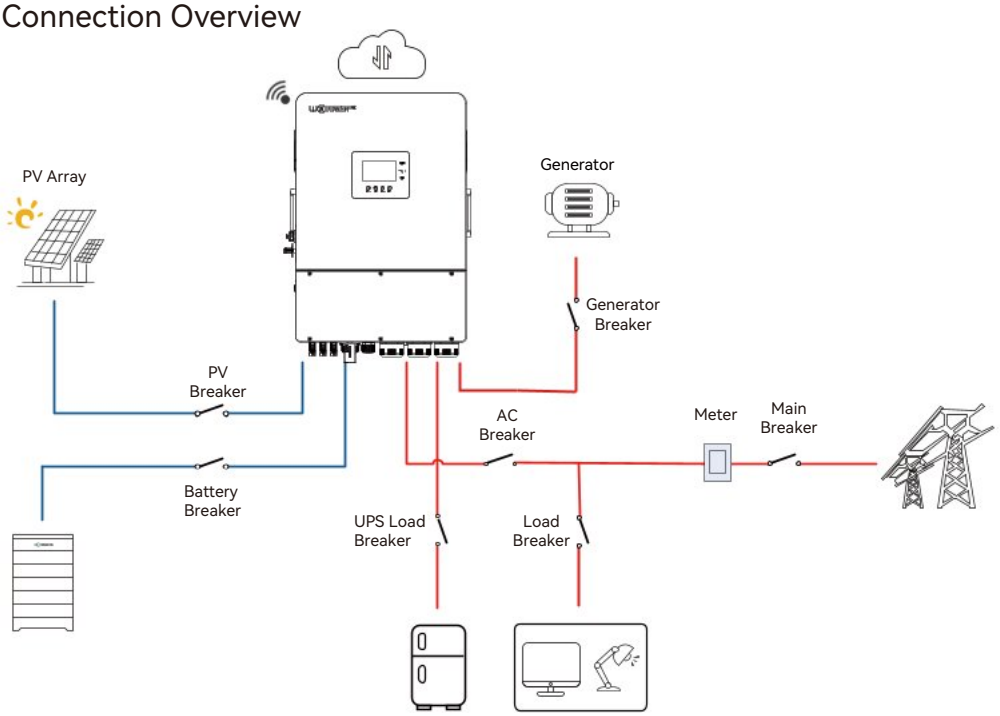

6.2.2 Electrical System Connection Diagram

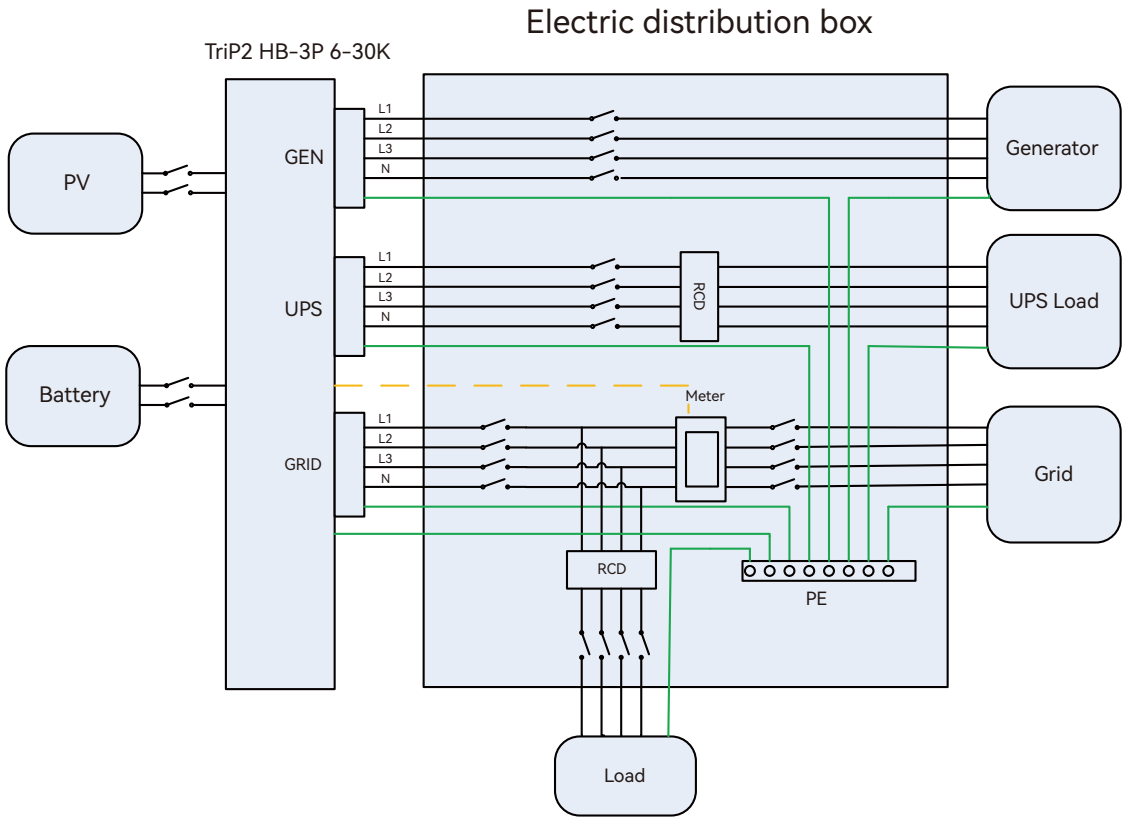

6.3 Preparing the Switches and Cables

Users should independently prepare corresponding breakers based on the actual application scenario.

PV Breakers(2P*6)	MPPT1 string1: 1000V/20A MPPT1 string2: 1000V/20A MPPT2 string1: 1000V/20A MPPT2 string2: 1000V/20A MPPT3 string1: 1000V/20A MPPT3 string2: 1000V/20A
Battery Breaker(2P)	80A/750V
Mian Breaker(4P)	100A/400V
Load Breaker(4P)	63A/400V
AC Load Breaker(4P)	63A/400V
UPS Load Breaker(4P)	63A/400V
Generator Breaker(4P)	63A/400V

Users should independently prepare corresponding cables based on the actual application scenario.

Serial Number	Electrical Name	Type	Conductor Cross-sectional Area	Cable Size
1	Ground cable	Single Core Multi-strand Yellow-Green Wire	Copper Wire (5~9mm^2)	10-8AWG
2	PV Input Wire	Single Core Multi-strand Copper Wire	Copper Wire (5~9mm^2)	10-8AWG
3	AC Output Wire	Single Core Multi-strand Copper Wire	Copper Wire (8-14mm^2)	8-6AWG
4	Battery Power Connection Wire	Single Core Multi-strand Copper Wire	Copper Wire (16-20mm^2)	4-6AWG
5	Battery Communication Wire	CAT-5 Ethernet Cable(RJ45) Outdoor Shielded Twisted Pair Wire	Multi-strand Copper Wire	/
6	Wireless Monitoring	WiFi/GPRS/4G	/	/

6.4 Terminal Introduction

The wiring terminals are located at the bottom of the inverter, please refer to the following diagram:

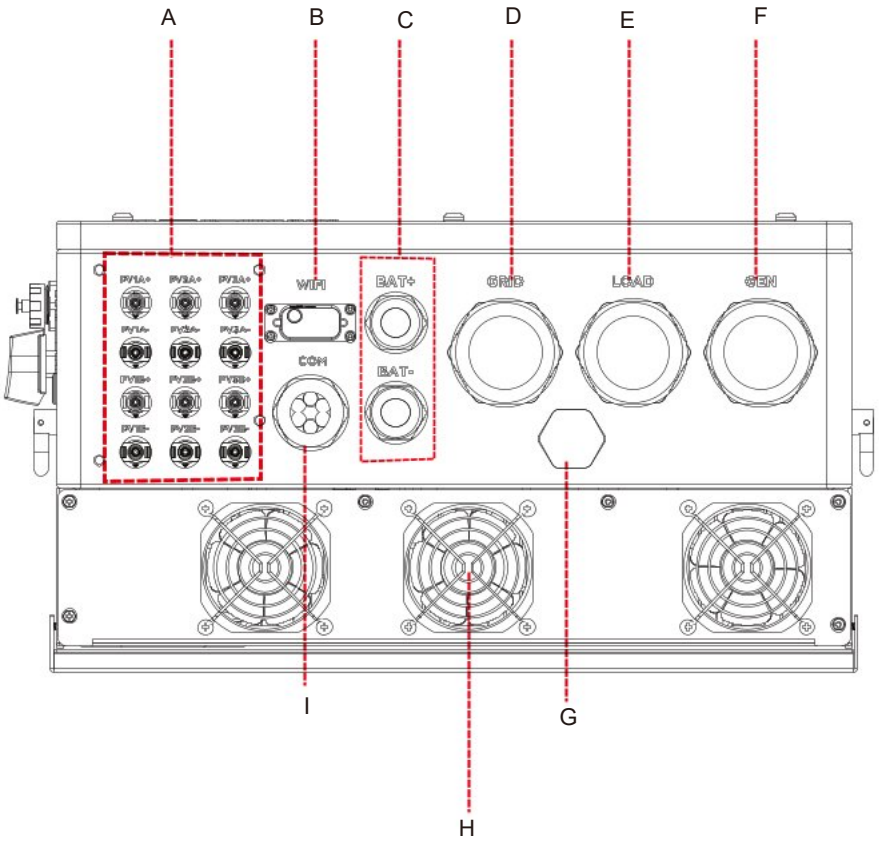

*This diagram is for reference only. Please refer to the actual object for accuracy!

Item	Name	Silk-screen	Remarks
A	PV Input Terminals	PV1+, PV1-, PV2+, PV2-, PV3+, PV3-	MC4 Photovoltaic Connector
B	Monitoring Port	WIFI	For connecting WiFi, GPRS, or 4G modules
C	Battery Connection Ports	BAT1+, BAT1-	Battery Connection Port
D	Grid Output Port	GRID	Installation of power lines for connection to the grid
E	Load output port	LOAD	Installation of UPS Load Output Power Line
F	Diesel Generator Wiring port	GEN	Installation of power lines for connection to the generator
G	Waterproof air vent valve	/	/
H	Cooling fan	/	/
I	Communication Wiring Port	COM	Interfaces for connecting battery, meter, parallel operation, etc.

6.5 Grounding Connection

⚠ WARNING

- This inverter is of the transformerless type. When the system is connected to the grid without an isolation transformer, it is essential that the positive and negative terminals of the photovoltaic strings are not connected to the grid's grounding (PE) to ensure the normal operation of the system.
- Before connecting the photovoltaic strings, batteries, grid, and communication, ensure proper protective grounding connections.
- In the photovoltaic power generation system, all non-current-carrying metalic components and equipment enclosures need to be grounded.
- The PE cable of the inverter and the metal frame of the photovoltaic array must be connected to the same grounding point to achieve equipotential connection.
- Pay attention to weatherproofing at the grounding wire terminal joint; do not leave it exposed directly to the air.
- When tightening the grounding screw on the enclosure, set the torque to 5N·m.

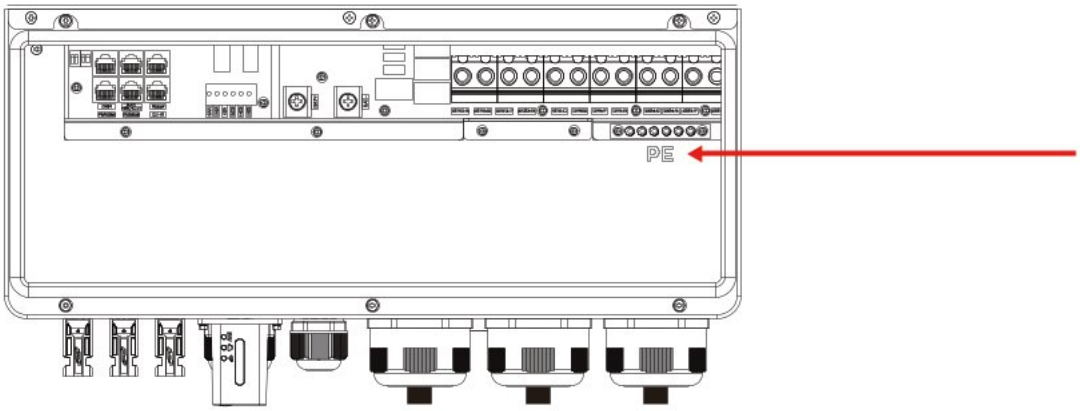

6.6 PV Input Line Connection

NOTICE

Before connecting the photovoltaic panels, use a multimeter to measure the voltage of the photovoltaic array and verify that it is within the expected range. If the measured voltage is abnormal, ensure that the photovoltaic array is operating properly before proceeding with the connection.

In cases where the ambient temperature of your photovoltaic panels may be below 0℃, check the voltage of the photovoltaic array. If you are unsure, seek further assistance from your system or panel supplier. Extremely low temperature may cause the voltage of the photovoltaic panels to increase by a certain percentage.

- Connect each string of photovoltaic panels separately to the TriP2 HB-3P 6-30K inverter and strictly avoid combining all photovoltaic strings before individually connecting them to each input of the TriP2 HB-3P 6-30K inverter.
- Each MPPT tracker of the TriP2 HB-3P 6-30K inverter can accommodate two photovoltaic strings.
- Plug waterproof plugs into the unused PV input terminals.
- Pay attention to distinguishing between PV terminal cores and battery terminal cores (refer to the diagram below).

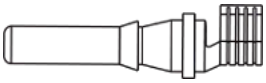

PV male connector

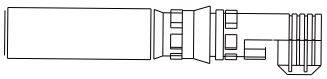

PV female connector

Cable Requirements:

Inverter Model	Cable Conductor Cross-Sectional Area	Cable Model	Cable Voltage Endurance Requirements
6K/8K/10K	5 mm^2	10 AWG	1000V
12K/15K/20K/30K	9 mm^2	8 AWG	1000V

1. Remove the insulation layer from the cable and install the cold-pressed terminal.

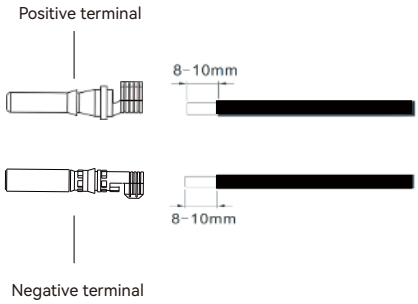

2. Utilize a crimping tool to crimp the terminal ensuring that the cable cannot be pulled out after crimping.

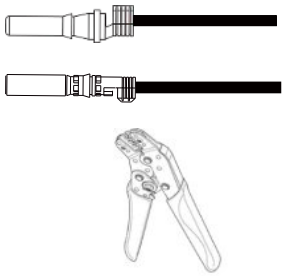

3. Securely assemble the cable into the positive and negative terminal shells.

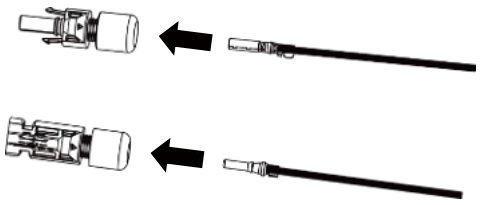

4. Tighten the sealing nut.

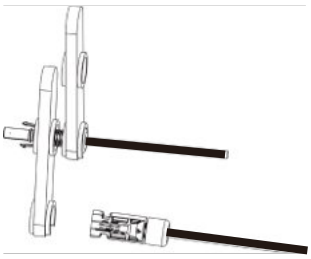

5. Check the polarity of the photovoltaic string cable and ensure that the highest voltage does not exceed 1000V.

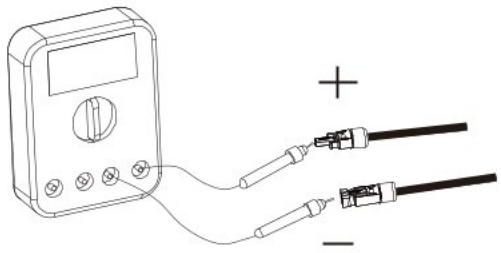

6. Confirm that all DC switches are in the "OFF" position, then insert the PV connector into the corresponding PV terminal in the inverter's PV input wiring area

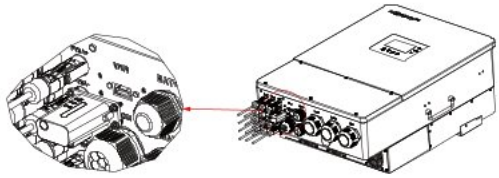

6.7 Battery Line Connection

This section of the manual only describes the battery connection on the inverter side. If you need more detailed information regarding the battery connection on the battery side, please refer to the battery manual.

Cable Requirements:

Inverter Model	Cable Conductor Cross-Sectional Area	Cable Model	Cable Voltage Endurance Requirements
6K/8K/10K 12K/15K/20K/30K	20 mm^2	4 AWG	1000V

NOTICE

- Before wiring, ensure that the inverter is powered off and there is no residual voltage at the battery interface. If the battery-side wires are already connected, ensure that the battery is in the closed state.
- When the battery is charging or discharging with a large current, it is crucial to tighten the wiring screws securely.
- Note that if there is a switch between the inverter and the battery, ensure that the switch is in the off position.
- Be aware that a substantial current flows between the battery and the inverter, so it is advisable to install them within a reasonable distance.

1. Remove the insulation layer from the cable and install the cold-pressed terminal.



2. Utilize a crimping tool to crimp the terminal, ensuring that the cable is securely fastened and cannot be pulled out after crimping.

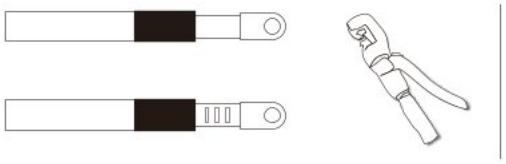

3. Use a heat gun to fix the heat shrink tube. 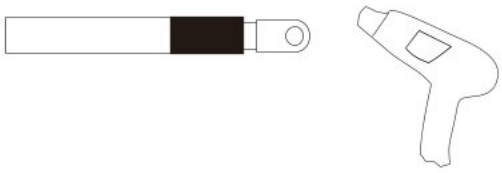	4.Confirm that the battery is in the closed state, then insert the battery connector into the corresponding terminal of the inverter's battery input wiring area. 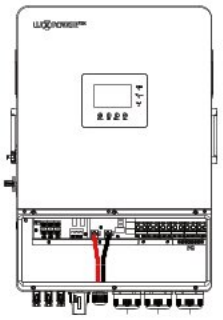

6.8 AC Output Line Connection

NOTICE

Precautions

- Install an AC switch on the external side of the inverter's AC output to ensure a safe disconnection between the inverter and the grid.
- Allow for sufficient margin in the length of the protective ground wire. This ensures that the protective ground wire bears the final stress when the AC output line experiences unexpected pulling forces.

Cable Conductor Cross-Sectional Area	Cable Model	Cable Voltage Endurance Requirements
Copper Wire (8-14mm^2)	8-6AWG	600V

1. Remove the insulation layer from the cable

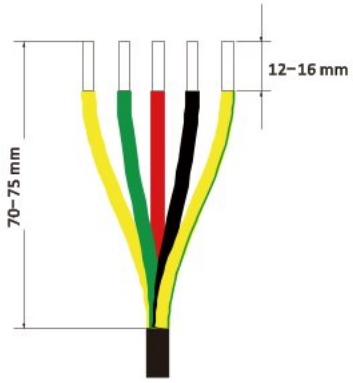

2. Pass the cable through the PG connector into the junction box

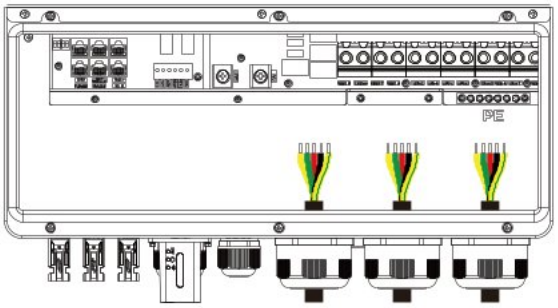

3. Fix the ground cable to the ground copper bar

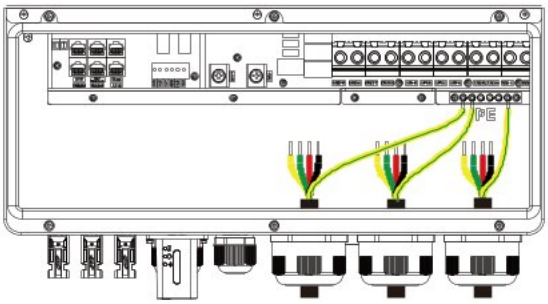

4. Fix the cable to the terminal in the junction box, and ensure that R,S,T, and N are not reversed

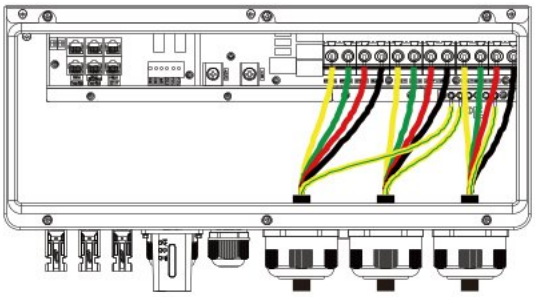

6.9 Communication Line Connection

The procedure for installing the communication cable waterproof cover is outlined as follows:

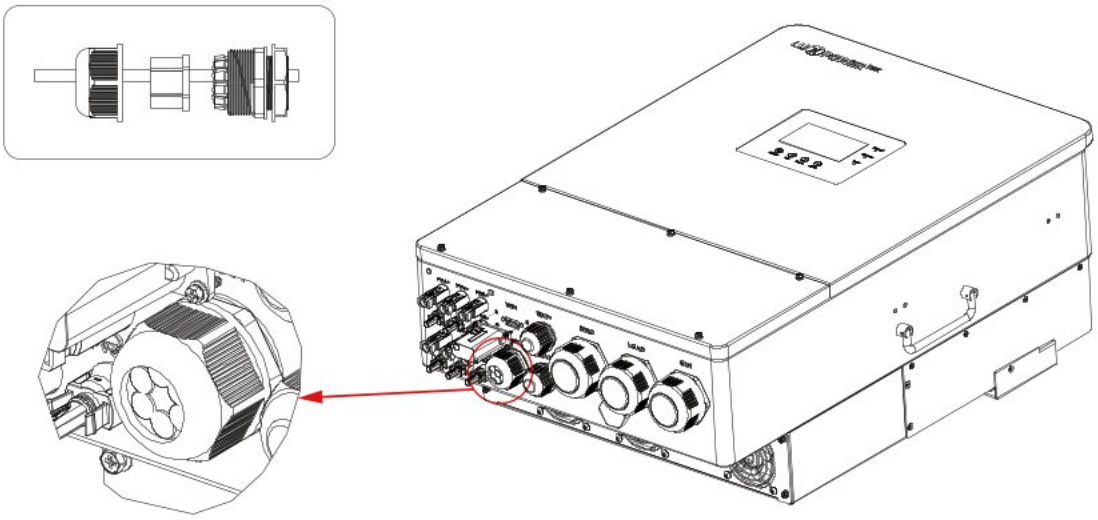

6.9.1 Battery Communication Cable Connection

NOTICE

- The battery typically includes an Ethernet cable, so it is recommended to use the provided Ethernet cable for the connection.
- If you need to replace the Ethernet cable, please choose a CAT5 or higher specification cable with a 568B wiring standard.

The communication interface of the battery is depicted in the diagram below.

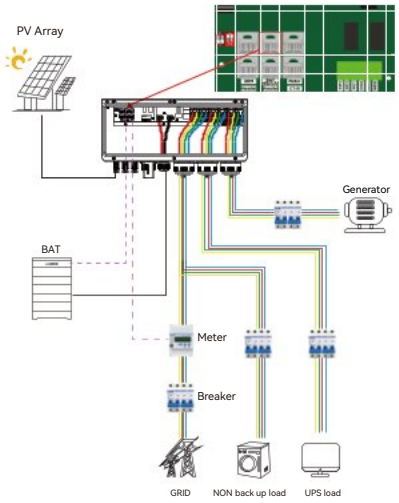

The configuration of the communication interface for the battery is as follows:



PIN	Function Description
1	BAT.485B
2	BAT.485A
3	NC
4	CAN-H
5	CAN-L
6	NC
7	NC
8	GND

6.9.2 CT Connection

- The inverter provides a port for external CT, which is used to obtain the grid power from current.
- The CT is included in the accessory package, and the connection and setting methods are as follows.
- Pay attention to the indication direction on the CT, which should point from the grid to the inverter.
- Please note that the CT ratio needs to be set on the unit.

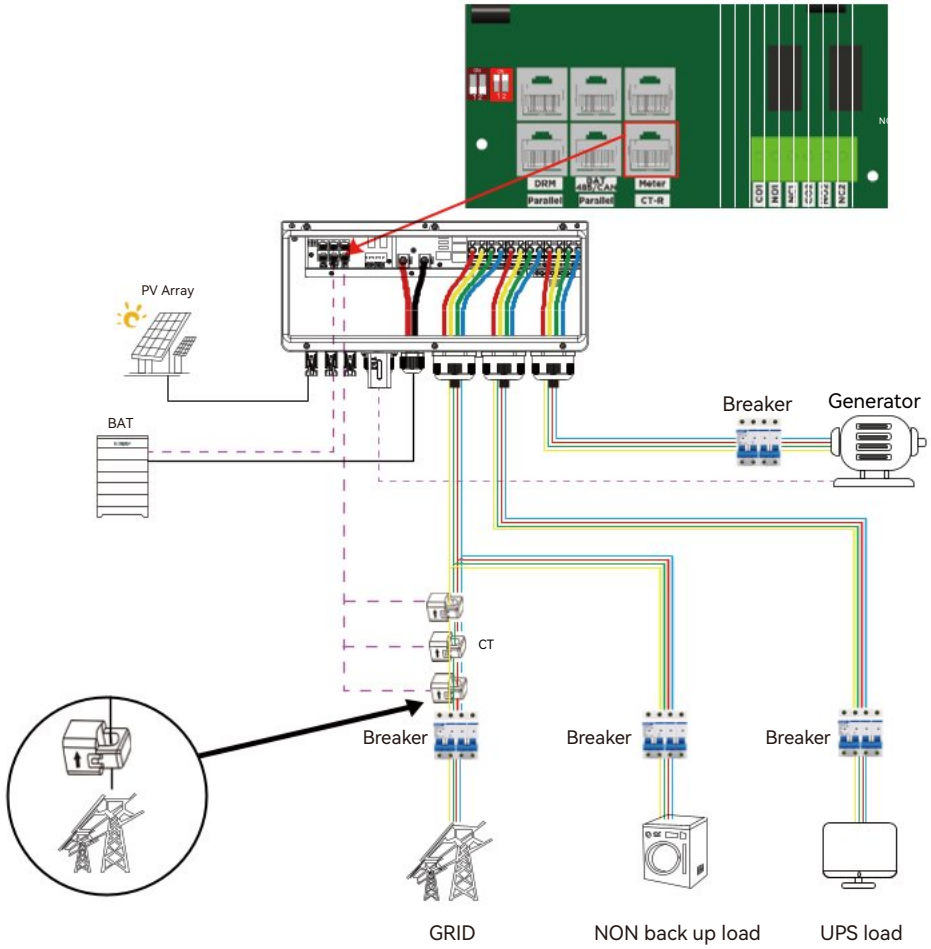

LCD setting is as follows:

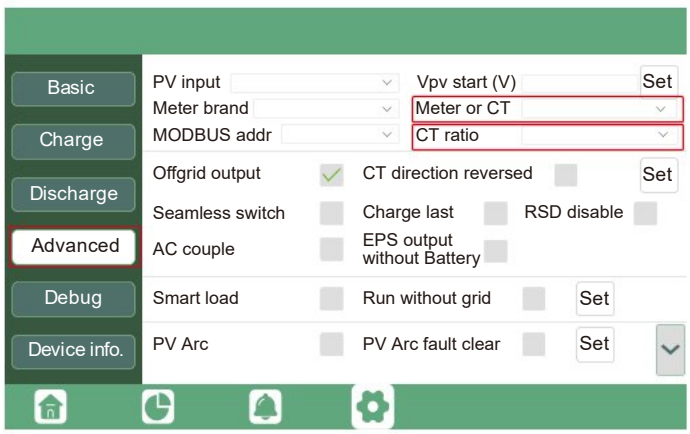

The pin definition of CT cable is as follows:



PIN	Function Description
1	IR+
2	IR-
3	IS+
4	IS-
5	IT+
6	IT-
7	NC
8	NC

6.9.3 Meter Communication Cable Connection

NOTICE

- The inverter provides a reserved meter access interface, which can be connected to TriP2 HB-3P 6-30K via RS485 for obtaining power information from the grid side.
- For meter connection, please use a straight-through CAT5 cable with 568B wiring standard to connect the inverter and the meter.
- Communication between the inverter and the meter is achieved through RS485. Connect pin 1 of the RS485 port in the diagram to the 485-B of the meter, and pin 2 to the 485-A of the meter.
- If using a meter included with the device, no additional configuration is necessary. It comes with default settings and will operate normally once the communication cable is connected.
- If using a separately purchased meter, take note of the model. Currently, the device supports only two recommended models mentioned below. When connecting, set the corresponding model on the LCD. The meter baud rate is 9600, and the meter address is 01. For detailed settings, refer to the meter's instruction manual.

The communication interface of the meter is illustrated in the following diagram.

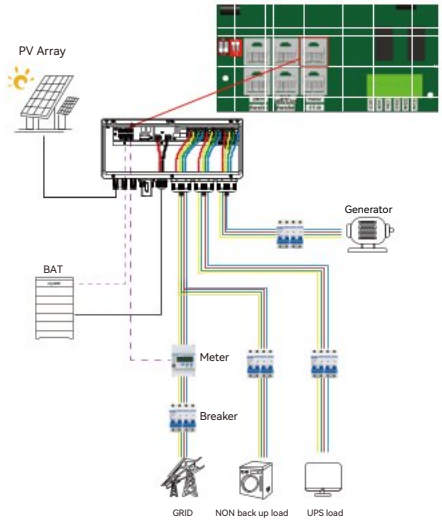

The configuration of the meter communication interface is as follows:



PIN	Function Description
1	Meter B
2	Meter A
3	NC
4	NC
5	NC
6	NC
7	NC
8	NC

Choose the meter brand on the LCD.

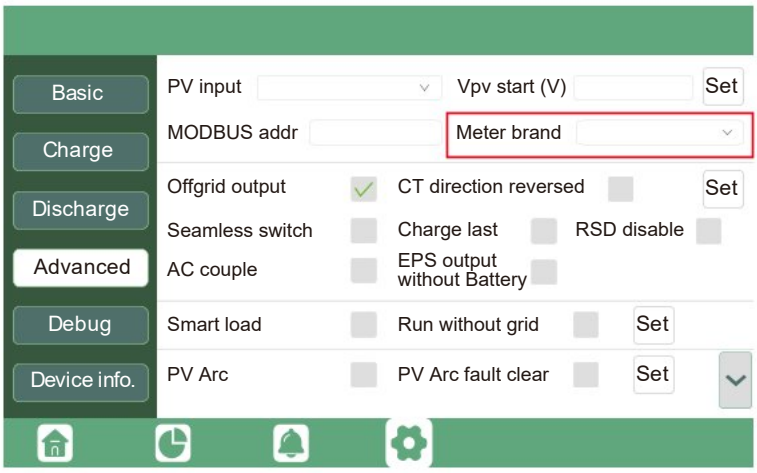

We recommend using the following models of meters:

Brand	Model
CHINT	DTSU666
EASTRON	SDM630-Modbus V2

The connection direction for the meter is as shown in the diagram below: the input side of the meter connects to the grid, while the output side connects to the inverter and load. For definitions of the input and output terminals of the meter, please refer to the meter's instruction manual.

This end connects to the inverter and load

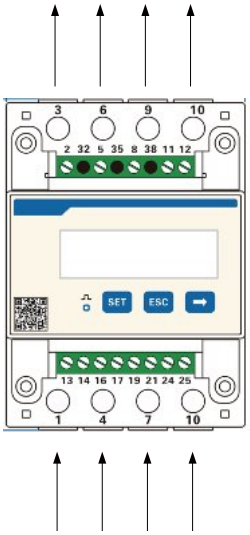

PIN 1, 4, 7 are input
PIN 3, 6, 9 are outputs

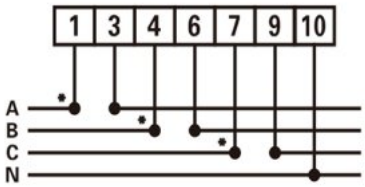

This end connects to the Grid

This end connects to the Grid

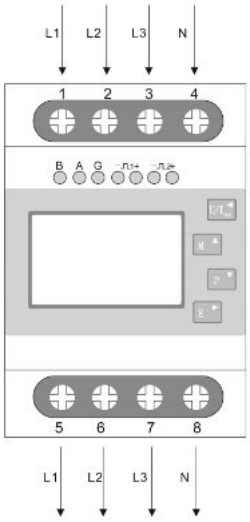

This end connects to the inverter and load

6.9.4 Parallel Communication Cable Connection

NOTICE

- The TriP2 HB-3P 6-30K inverter features a designated parallel communication interface that can be linked to the TriP2 HB-3P 6-30K using the CAN protocol. This enables the TriP2 HB-3P 6-30K to gather information from parallel machines, such as multiple machines utilizing the same battery.
- For parallel communication connection, utilize a CAT5 or higher-grade straight-through network cable with a 568B configuration to connect to the inverter.
- If parallel communication is needed, please reach out to LuxpowerTek to confirm the information and update the program.

The parallel communication interface is shown in the diagram below:

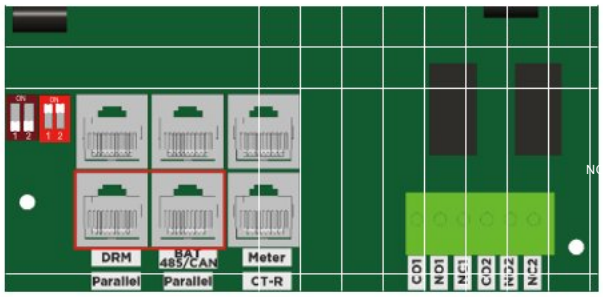

The pin definitions of the parallel communication interface are as follows:



PIN	Function Description
1	NC
2	GND
3	NC
4	CAN-H
5	CAN-L
6	Parallel A
7	Parallel B
8	Parallel C

Please set the CAN communication PIN to the ON position for the first and the end inverter
Turn the DIP switch ON the right side inside the first and last machine to ON.

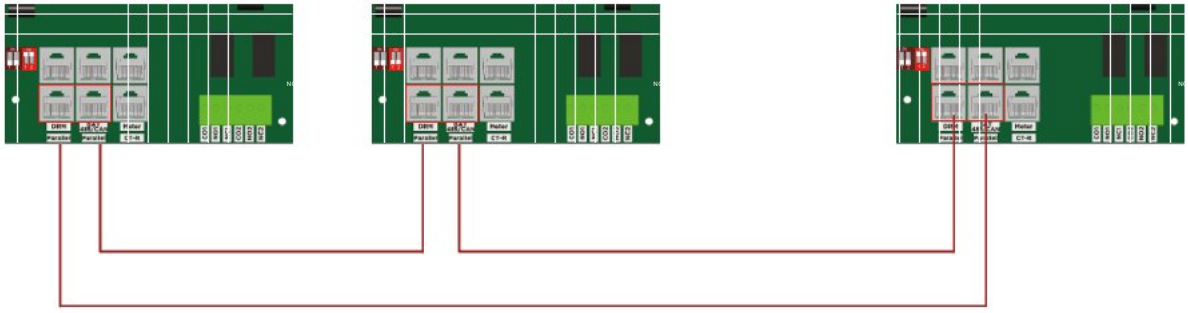

If the parallel cable is not long enough, please make a straight pin to pin cable

Parallel Wiring Diagram

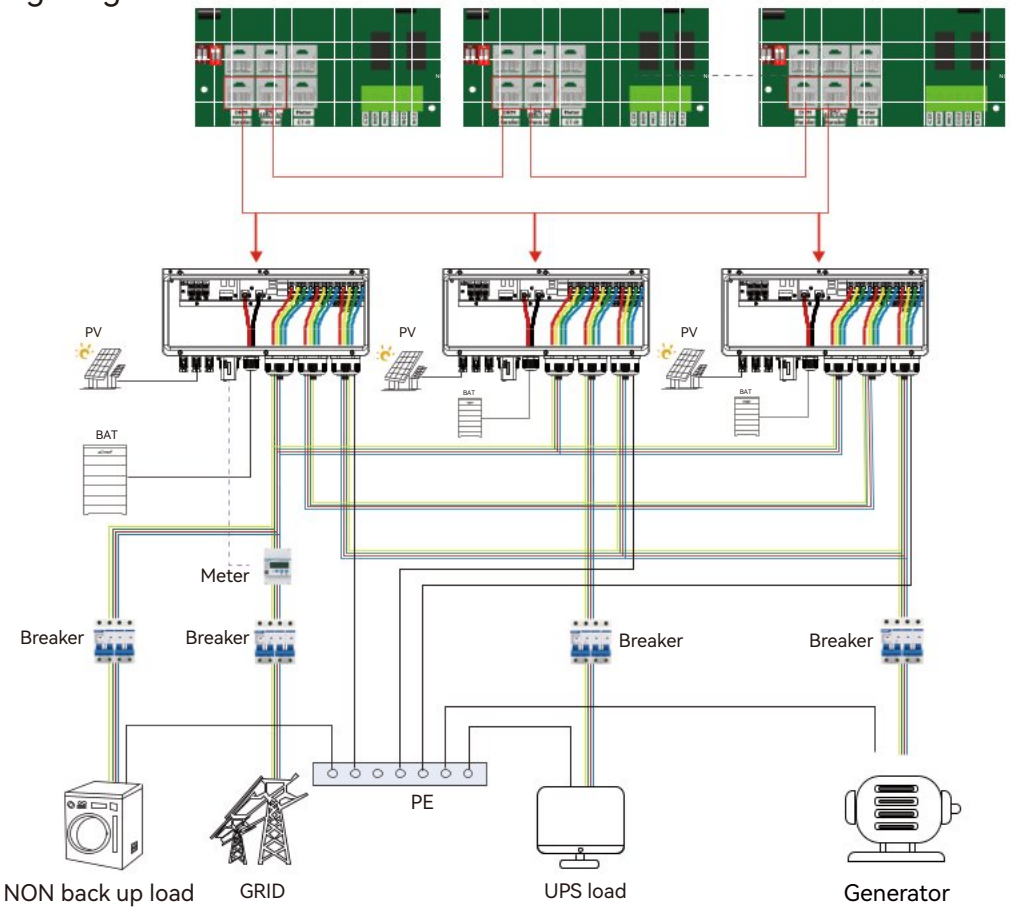

6.10 Dry Contact Connection

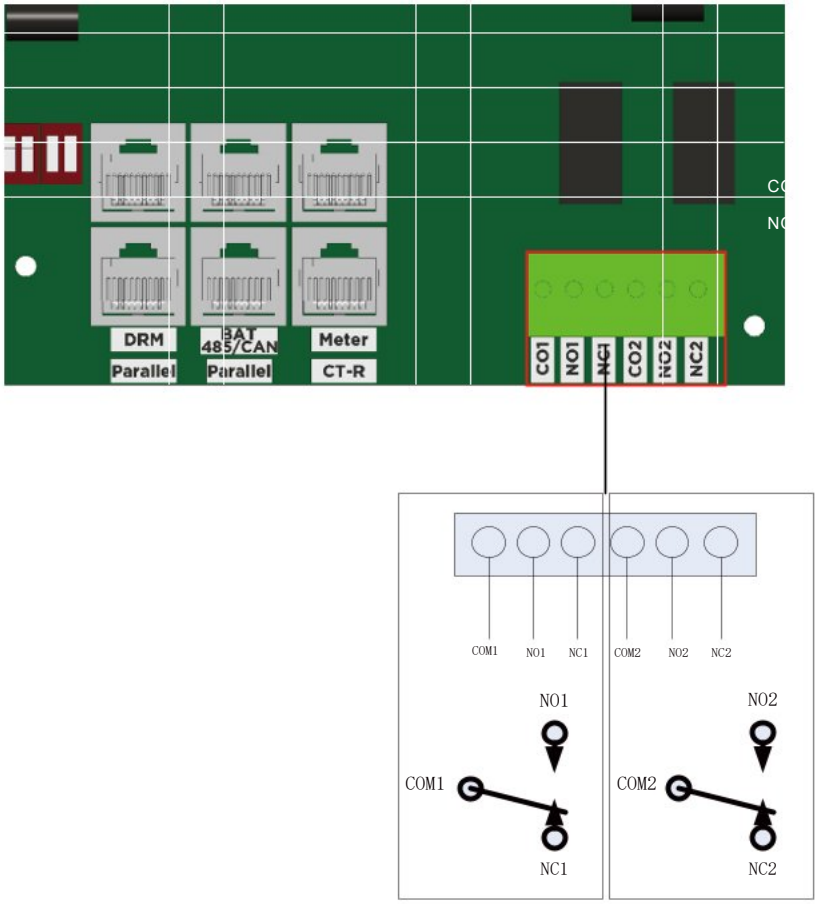

COM1 and NC1 form a normally closed switch, while COM1 and NO1 form a normally open switch.
When the dry contact is triggered, COM1-NO1 is turned on and COM1-NC1 is turned off
COM2 and NC2 form a normally closed switch, while COM2 and NO2 form a normally open switch.
When the dry contact is triggered, COM2-NO2 is turned on and COM2-NC2 is turned off

6.11 Installing the Communication Module

Install the communication module at the designated interface as shown in the diagram and secure it with the provided screws.

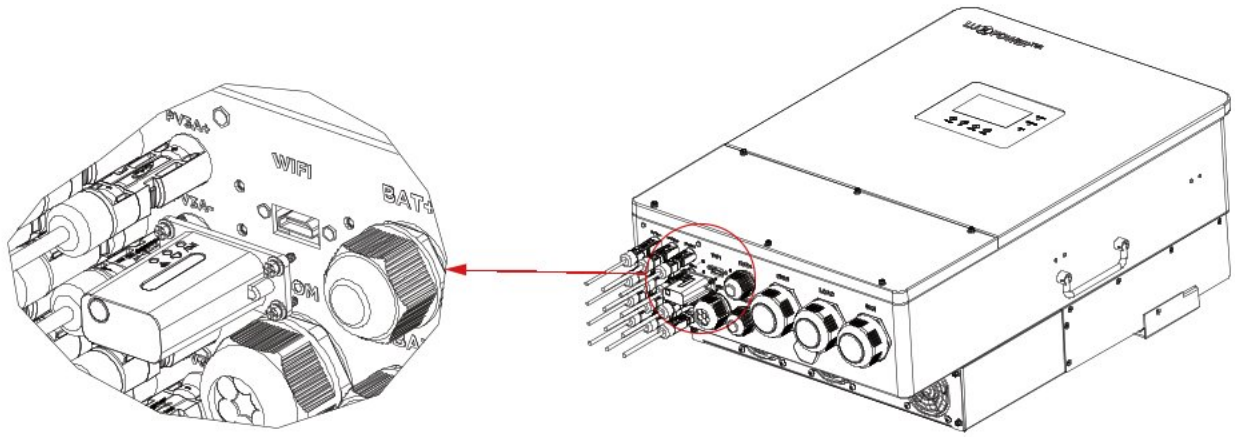

7. Operation Instructions

7.1 Indicator Lights and Button Introduction

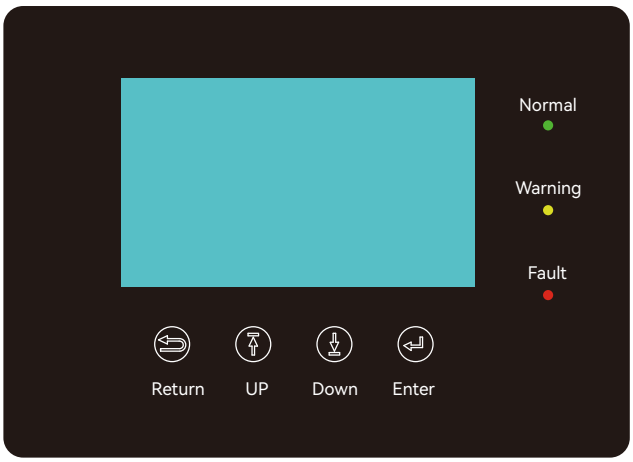

Normal	Green LED	———	Working normally	
		- - - - -	Firmware upgrading	Wait until the upgrade is complete
Warning	Yellow LED	———	Warning, inverter working	Need troubleshooting
Fault	Red LED	———	Fault, inverter stops working	Need troubleshooting

7.2 Monitoring Connection

Users have the capability to monitor the inverter through WiFi/WLAN/4G/2G communication devices, allowing the viewing of monitoring data on a computer or remotely on a smartphone. To initiate this process, kindly download the LuxCloud app from Google Play or the Apple App Store and proceed to log in to your user account.

7.2.1 Setup the Monitor System

1. Create an Account

Account creation depends on the user role:

Installer/Sub-distributor: Please obtain your account credentials from your upstream supplier.

End User: You can register via the mobile app using an Installer Code provided by your supplier. Alternatively, your supplier can share a registration link for account creation.

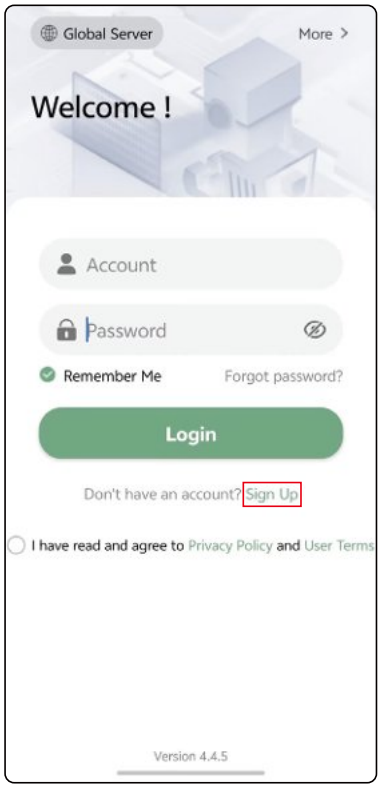

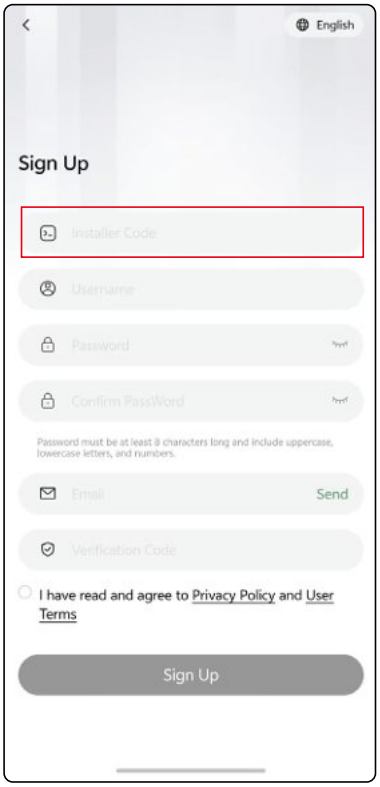

7.2.2 Create a Station and Add Dongle

After logging in, create a station first.

Then add the WiFi dongle to the created station.

If multiple stations are required, you can create additional stations as needed.



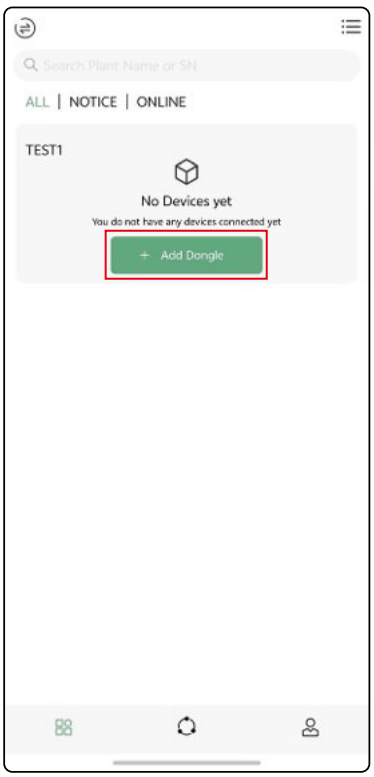

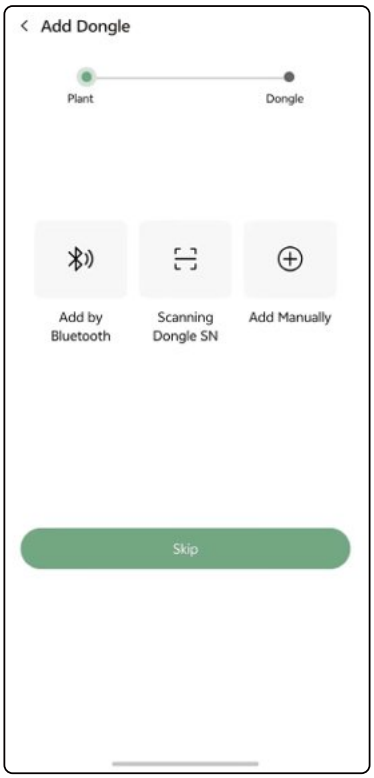

7.2.3 Set Home WiFi Password for Dongle

Step 1. Connect your mobile phone to the “DGxxxxxxx” WiFi network (“DGxxxxxxx” is the serial number of the WiFi dongle).

Step 2. Open the app and tap “Dongle Connect”.

Step 3. Select the home WiFi network and enter the password. Tap “Home WiFi Connect”. The dongle will restart automatically and connect to the server.

Step 4. Check the LED indicators on the WiFi dongle. The middle LED will remain steady when the connection is successful.

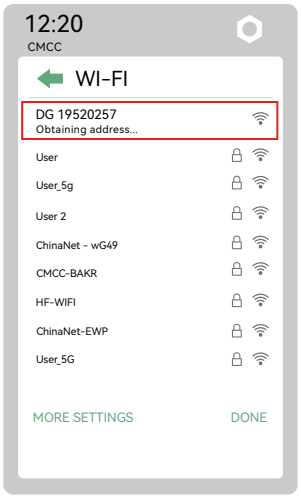

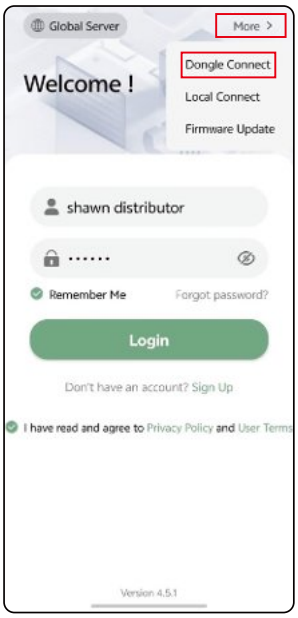





Step 5. Disconnect from the “DGxxxxxxx” network and log in to the app. The inverter will appear online, and remote monitoring will be available.

Additional Information

For more details on WiFi dongle setup and monitoring system configuration, refer to:

1. Wifi Quick Guidance
   - Quick setup guide for connecting the WiFi dongle to a local network (also included in the product packaging).
2. Monitoring System Guide
   Includes account registration, parameter settings, and system configuration.
3. Monitoring UI Guide
   Overview of the monitoring interface.

7.3 LCD Interface Settings Introduction

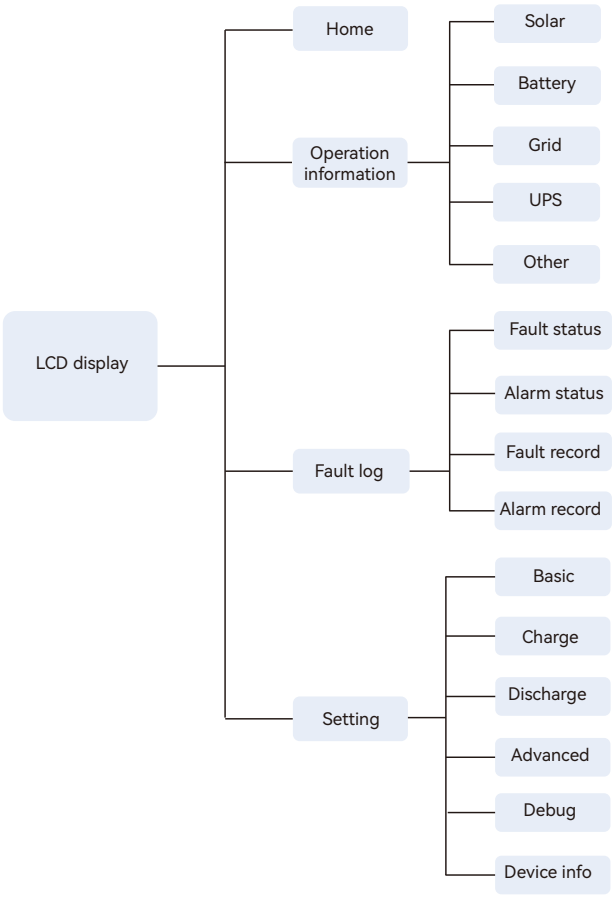

There are four main interfaces on the LCD: Home, Operation Information Query, Alarm, and Fault Record, Settings, as shown in the diagram below.

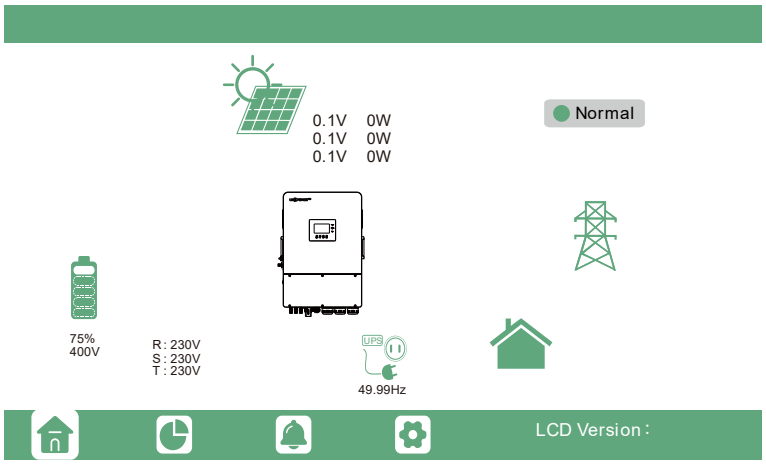

If the LCD is in sleep mode, simply touch the screen to wake it up. Upon activation, the home interface will be displayed. This interface provides users with a comprehensive overview of the system, including real-time information for each component. Key metrics such as Battery State of Charge (SOC), battery charge/discharge power, grid import/export power, load power, etc, will be readily accessible.

By touching the operation information icon on the LCD, users can view real-time operational data for various components, including Solar, Battery, Grid, UPS, etc. This feature allows for a detailed and up-to-the-minute understanding of the system's performance and individual component metrics.

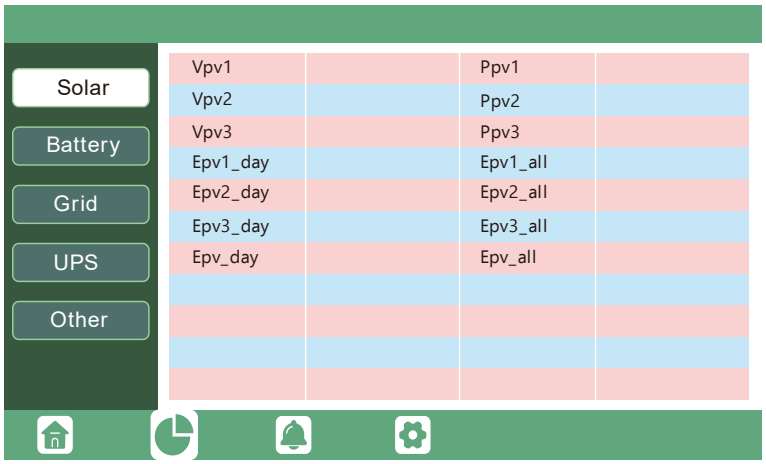

By touching the fault record icon at the bottom of the screen. This section displays both current and historical fault and warning information. It serves as a valuable tool for monitoring and addressing any issues that may have occurred during the system's operation.

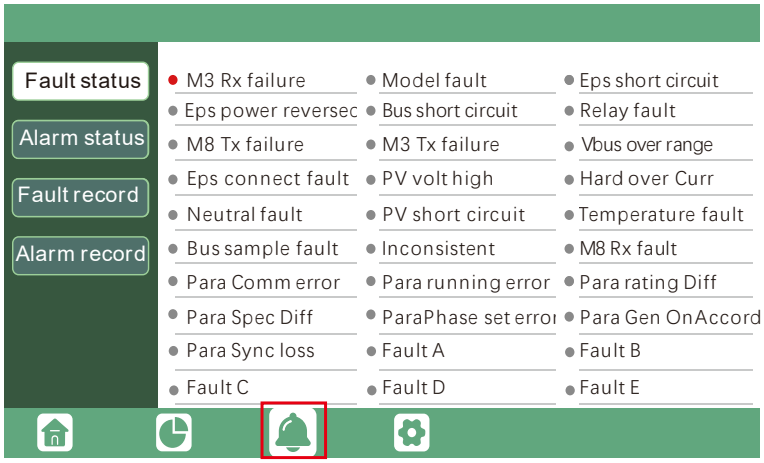

By touching the settings icon at the bottom of the screen, users can access all the machine's settings on that page. This section allows for configuration adjustments and customization of various parameters. For detailed mode settings please refer to the following chapter on operation mode settings.

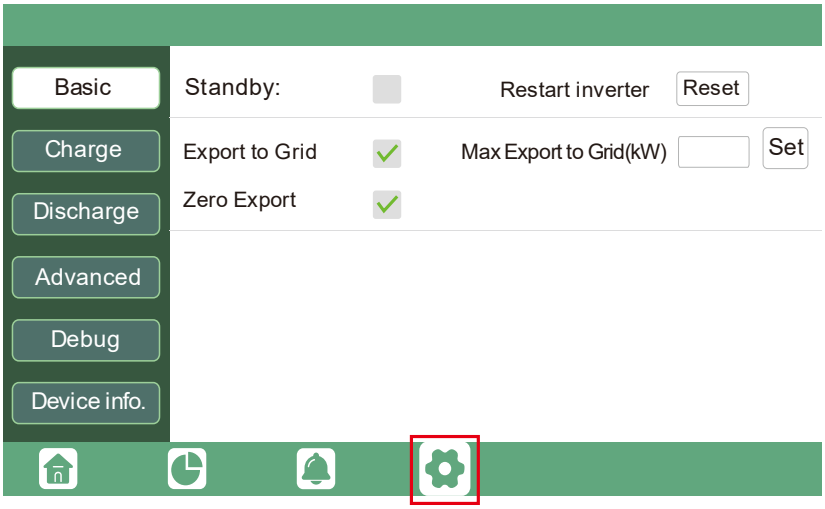

7.4 Operating Mode Settings

7.4.1 Self-consumption Mode

In this mode, the priority order of load supply sources is Solar>Battery>Grid. The priority order of solar power usage is Load>Battery>Grid.

When solar power is sufficient, it will supply the load, then charge the battery, and finally feed excess power back into the grid (if the feedback function is enabled).

In cases where solar power alone is insufficient for the load, both solar and battery will contribute. If the battery is empty, the grid will be utilized to meet the load.

When the battery is unable to supply power, priority shifts to using solar power for the load. If solar power is insufficient, the grid becomes the source of power for the load.

If both solar power and the battery are unable to supply power, the load will be sourced from the grid.

Application Scenarios

Self consumption mode will increase the self consumption rate of solar power and reduce the energy bill significantly.

Related Settings

This mode is set as the default mode, effective when Charge Priority , AC Charge, and Forced discharge are disabled.

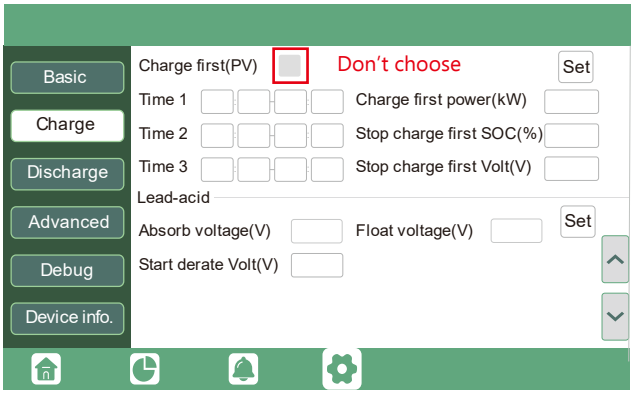

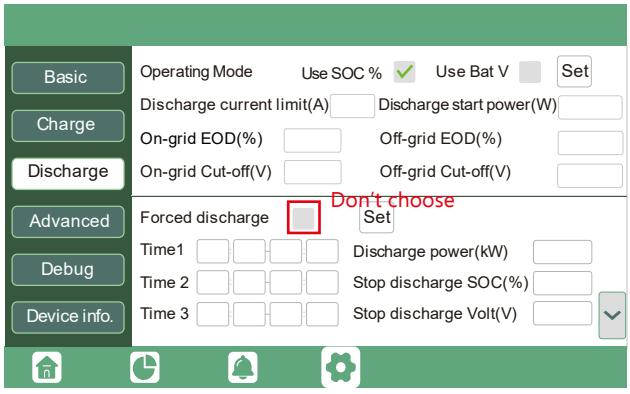

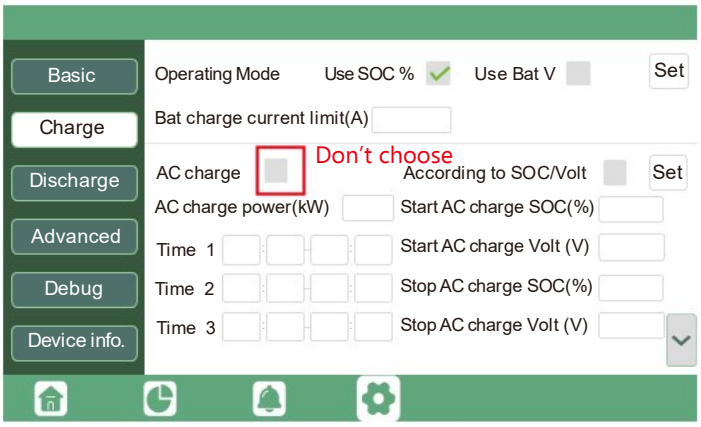

To export power to the grid, enable the "export to grid" option, ensuring compliance with local grid regulations

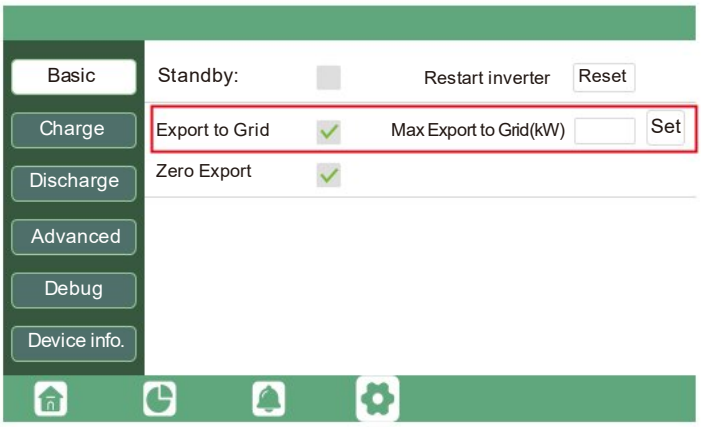

Example:

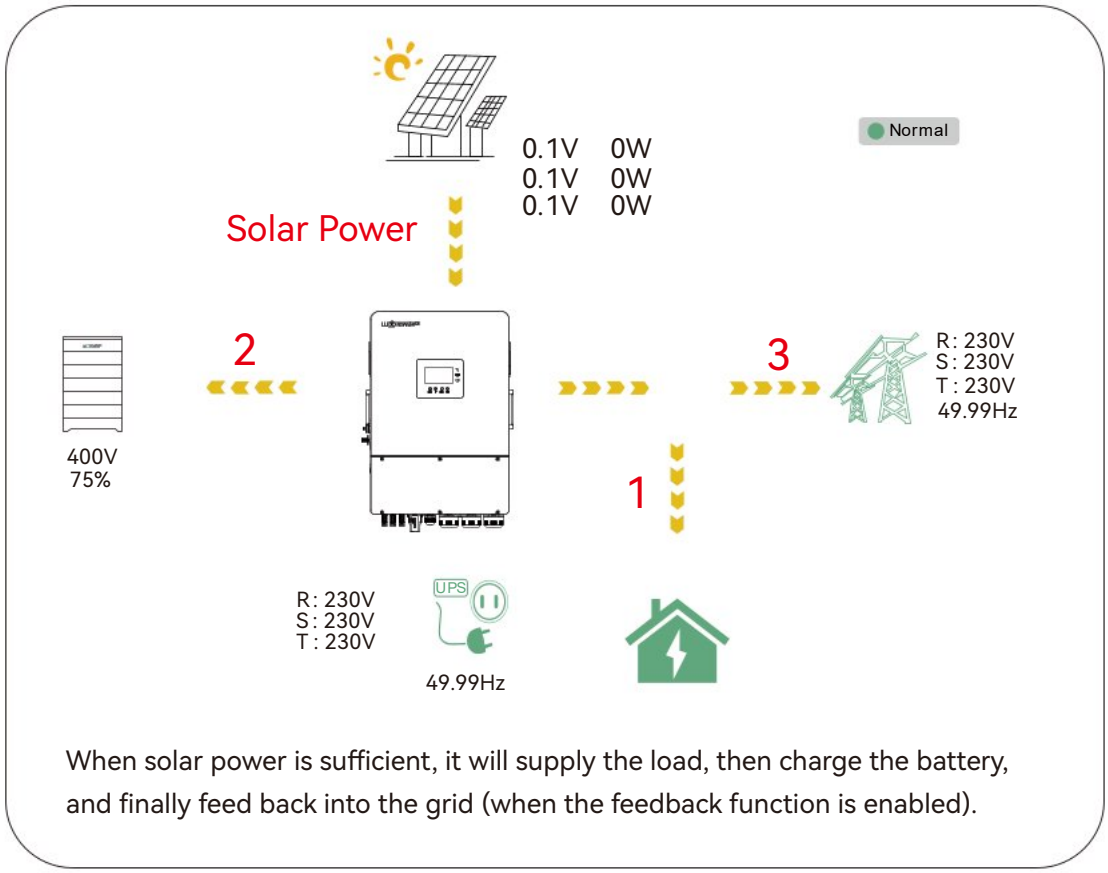

When solar power is sufficient, it will supply the load, then charge the battery, and finally feed back into the grid (when the feedback function is enabled).

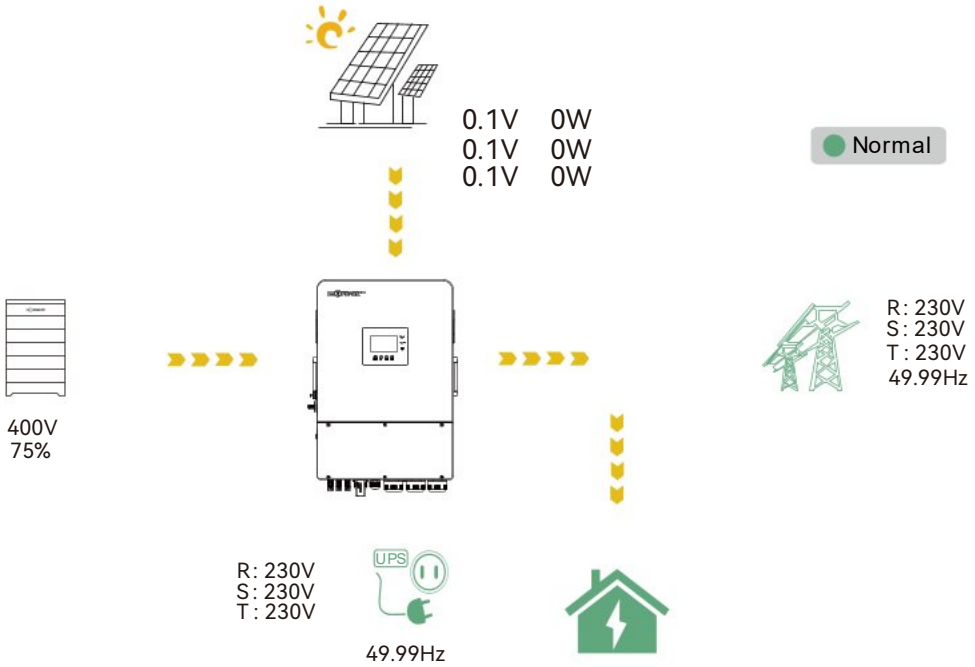

When the solar power is insufficient to handle the load, the battery and solar power will work together to meet the load requirements.

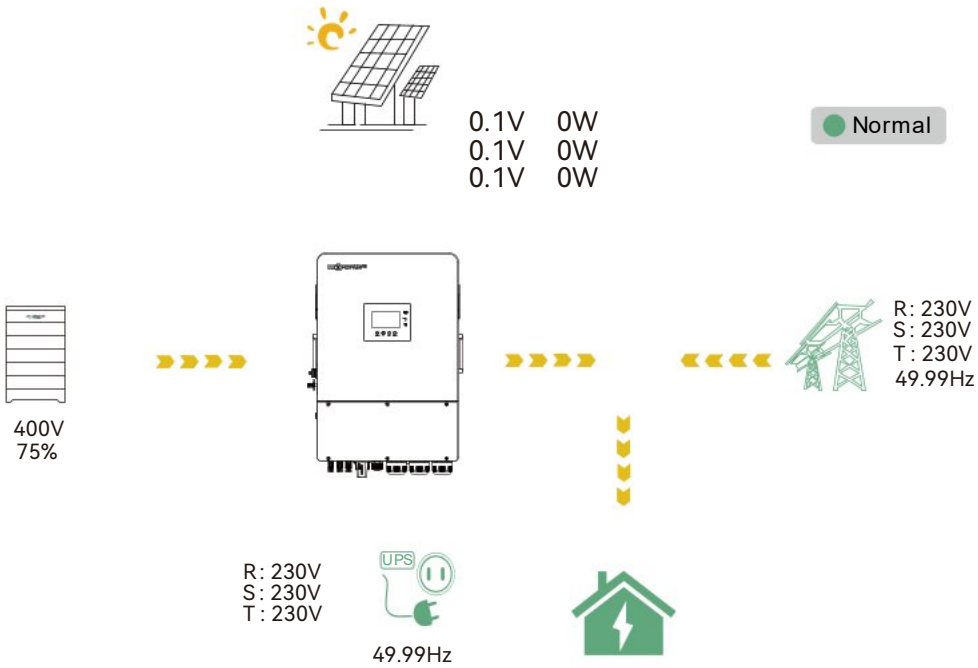

When solar energy is unavailable, the battery takes precedence in supplying power to the load. If the battery's power is insufficient, both the battery and the power grid will jointly supply power to the load.

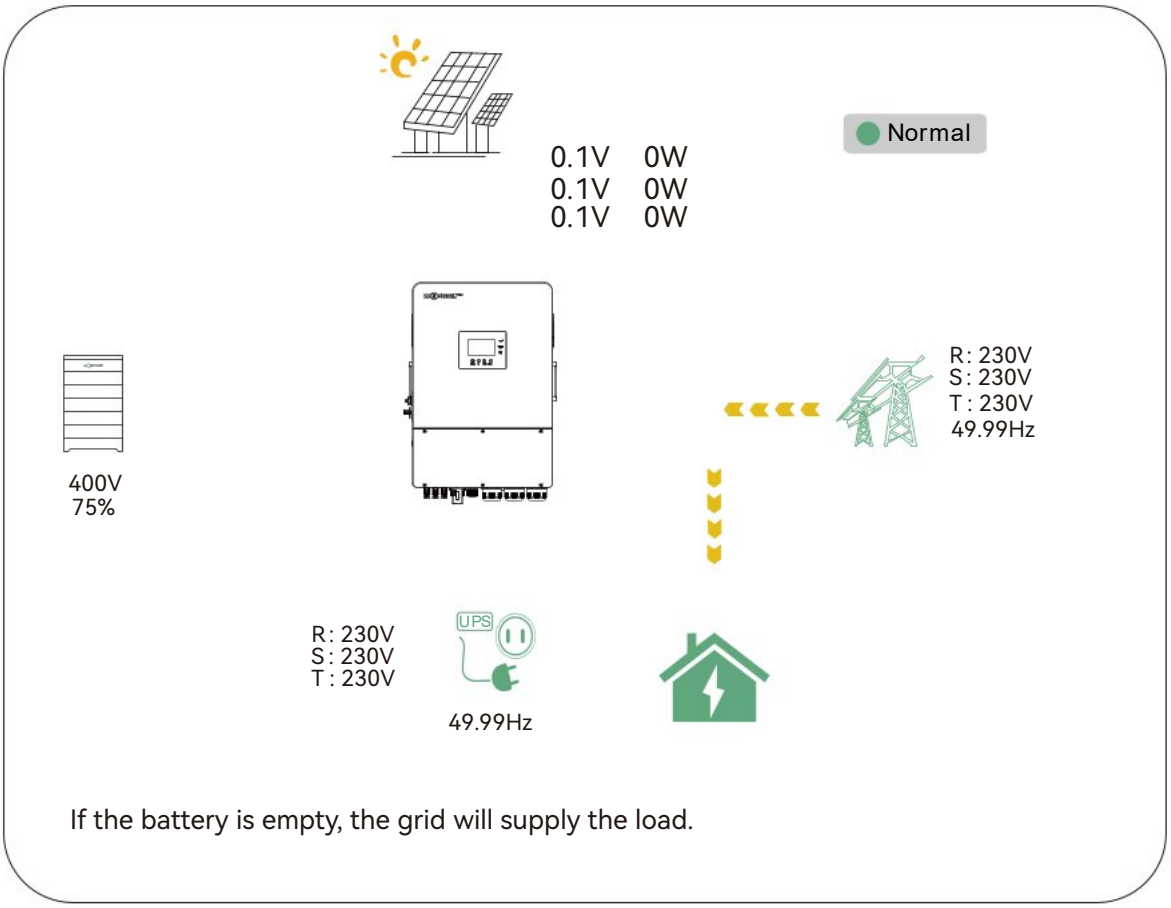

7.4.2 Charge First Mode

In this mode, the priority order for solar power usage is Battery > Load > Grid. During the Charge Priority time period, grid power is prioritized to supply the load. If there is excess solar power after battery charging, the surplus solar power will be used together with grid power to supply the load.

Application Scenarios:

This mode is suitable when users prefer to use solar power for battery charging, and grid power is used to supply loads.

Related Settings

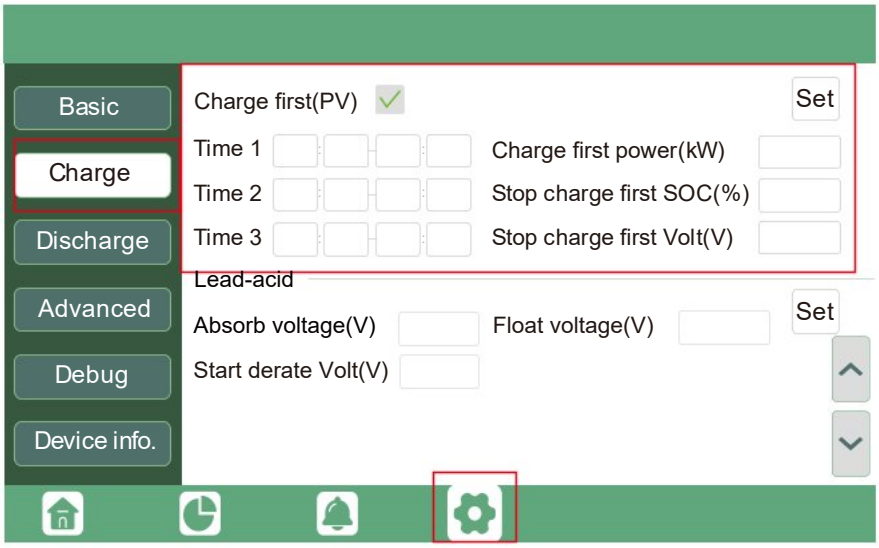

Example:

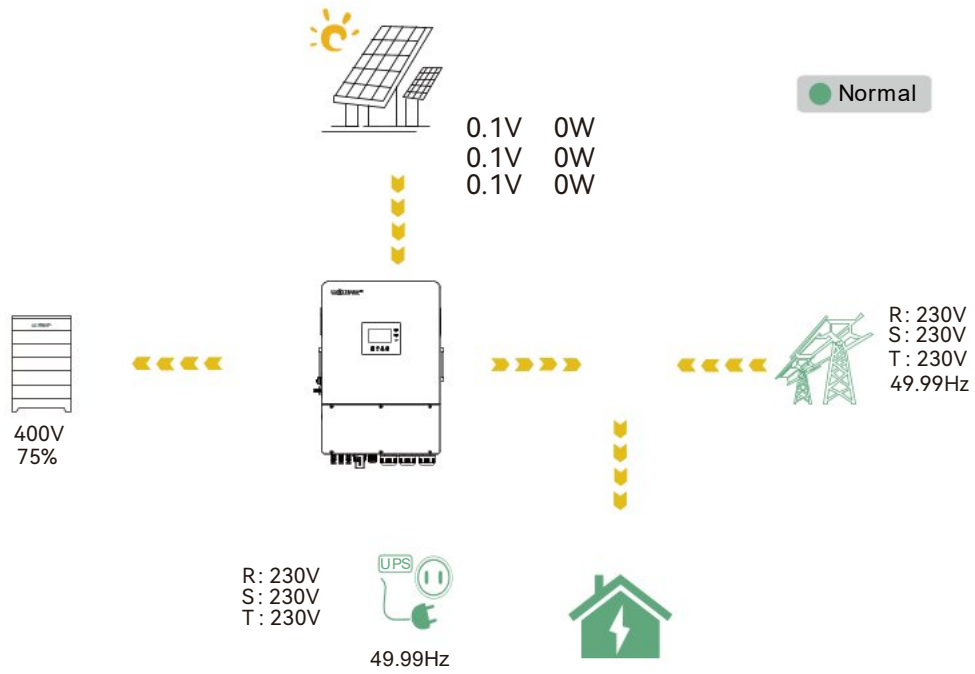

Solar power will be primarily utilized to charge the battery. Any surplus power beyond the battery's charging requirements will then be allocated to power the load, ensuring efficient energy utilization.

7.4.3 Forced Charge Mode

In this mode, users can configure AC charging to charge the battery from the grid during periods of low electricity prices. Additionally, battery discharging can be set to supply power to loads or feed excess power back to the grid during periods of high electricity prices.

Application Scenarios

This mode is ideal for areas with notable variations in peak and off-peak electricity tariffs.

Example:

AC Charge Mode

Users have the flexibility to configure the inverter for either a direct charge or a charge based on the battery State of Charge (SOC) and voltage over a specified duration.

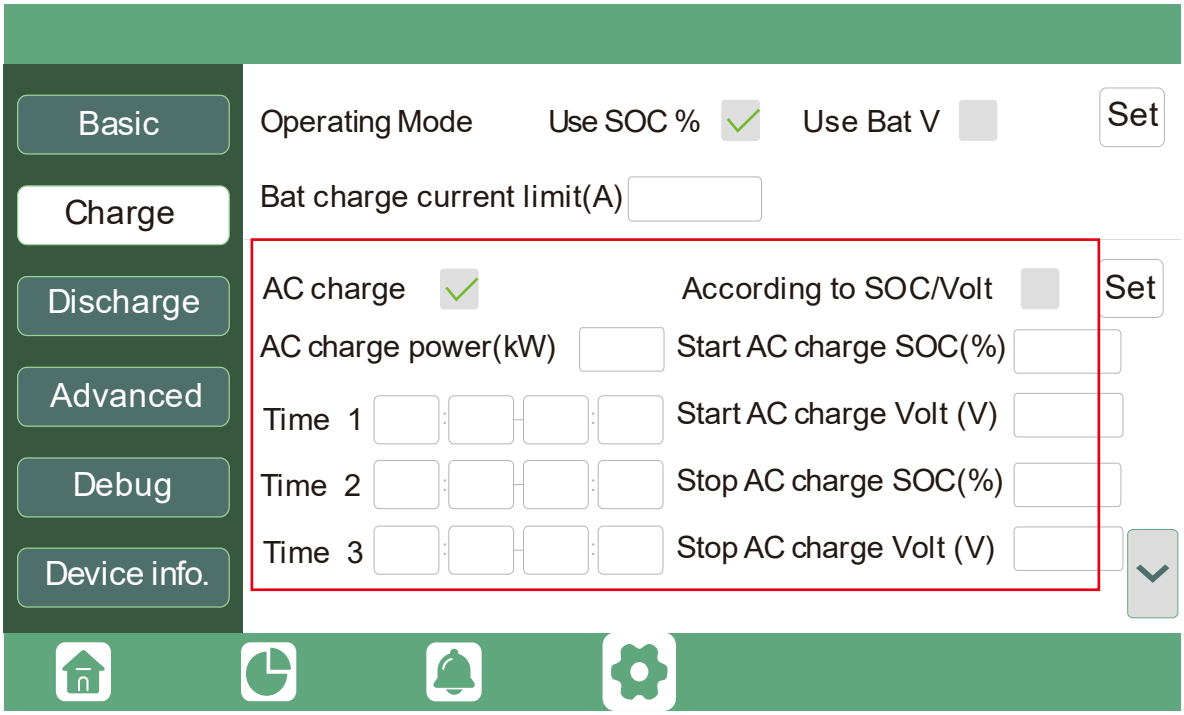

Discharge Mode

Discharging settings options

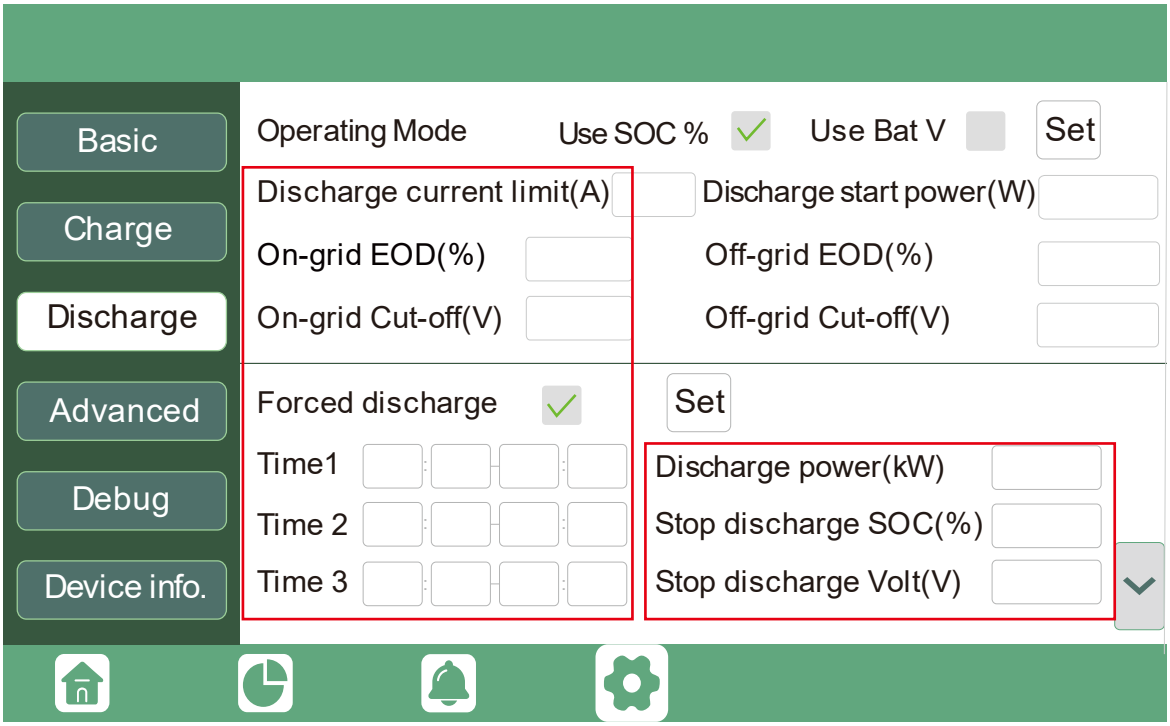

Discharge current limit(A): The Max. discharge current from Battery

Discharge start power(W): The default value is 0
When the inverter detects the import power is higher than this value, battery start discharging, otherwise battery will keep standby

On-grid Cut-off(%) and Off-grid Cut-off(%)
On-grid Cut-off(V) and Off-grid Cut-off(V):
End of discharge SOC/Cut off voltage in on-grid and off-grid condition respectively.

Forced discharge: Settings for battery force discharge within certain time period.
In the preset time period, the inverter will discharge battery at the power set by “discharge power”, until battery SOC or voltage reaches “Stop discharge ”value.

7.4.4 Off-grid Mode

When the grid is interrupted, the inverter switches to Off-grid mode to supply power to critical loads; when the grid is restored, the inverter switches to On-grid mode to operate. (Mainly applicable to unstable grid and critical loads)
Off-grid settings options
You can set the Off-grid output enable and also the battery Off-grid stop discharge SOC and Cut-off voltage.

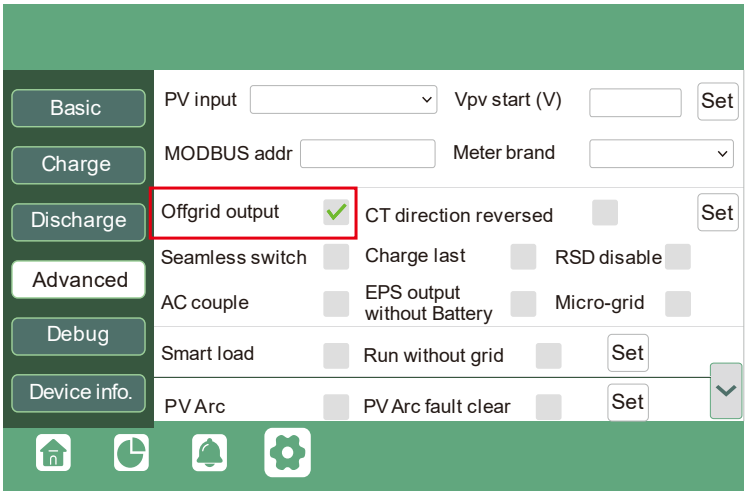

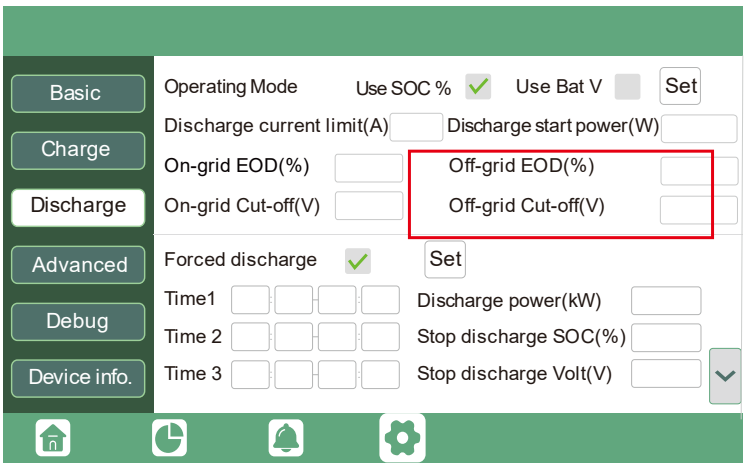

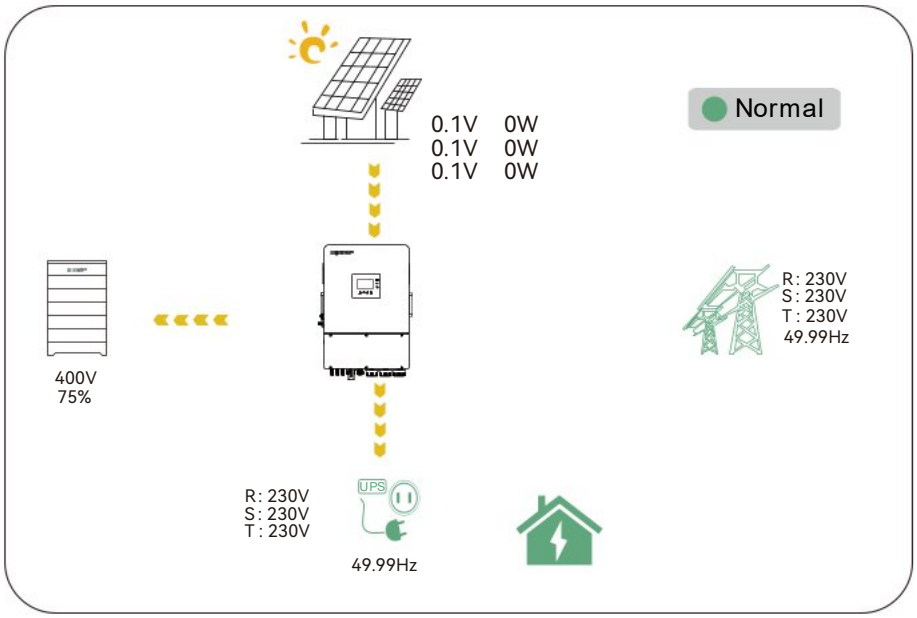

In situations where no battery is present, users can enable individual off-grid functionality for the PV system. This can be achieved by selecting the "No battery" type and subsequently choosing the EPS output without battery.

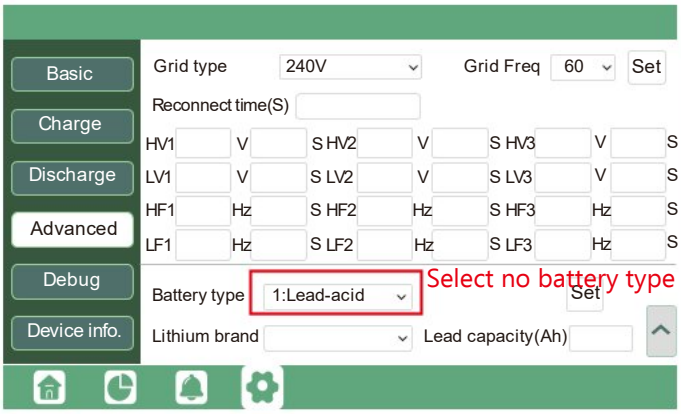

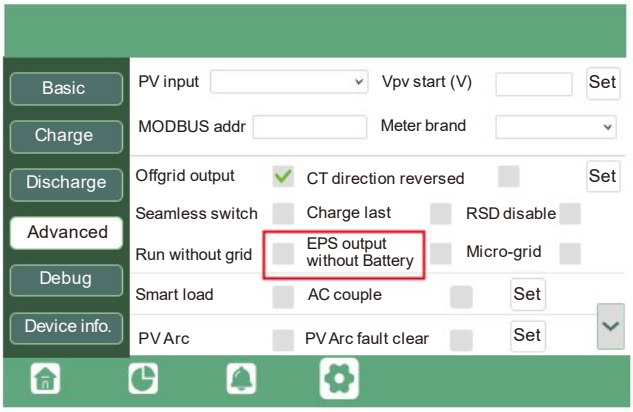

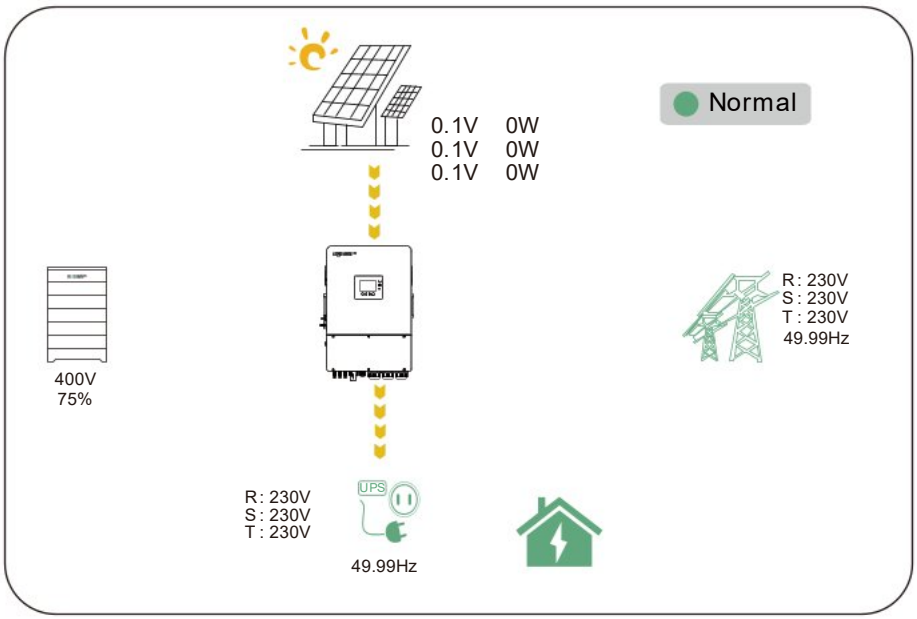

7.5 GEN Port Function

7.5.1 Working with a Generator

- This inverter is designed to work seamlessly with a generator. It comes equipped with a generator port specifically designed for connecting a three-phase generator with an input voltage of 230/400V.
- Upon the generator's activation, the device will automatically disconnect from the grid, directing all loads connected to the EPS (Emergency Power System) to be powered by the generator. Simultaneously, the battery will undergo a charging cycle.
- For users who wish to initiate the generator remotely using this device, it's essential to connect the generator start signal to the COM port of the device. Refer to the diagram for specific connection details; it can be linked to COM1 and NO1 of a normally open switch or COM1 and NC1 of a normally closed switch.
- The system intelligently uses the battery's State of Charge (SOC) or battery voltage to determine whether it's necessary to remotely start or stop the generator.
  Note: The straight-through relay on the generator port has a rating of 60A. When starting the generator, it's crucial to ensure that the total load and charging current do not exceed 60A.

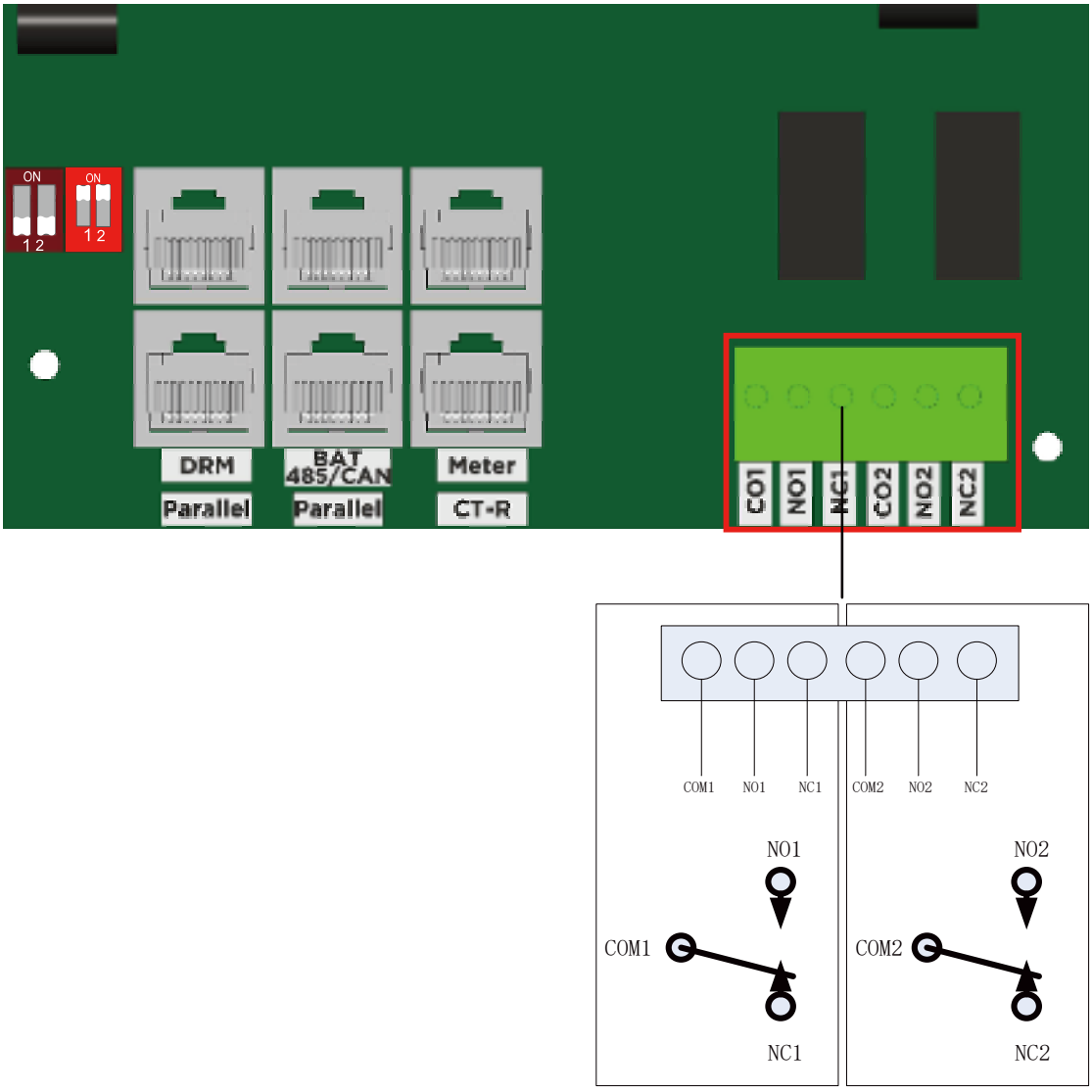

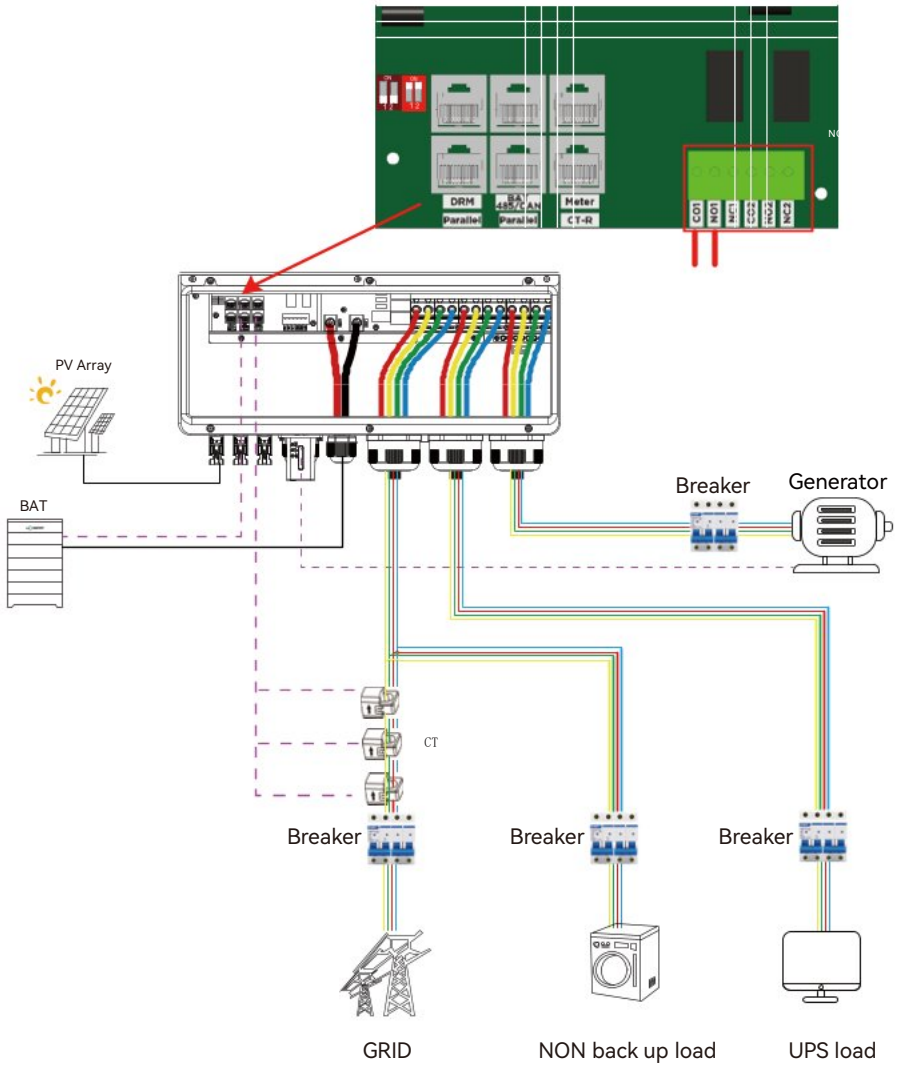

Generator Start Conditions:

When utility grid fails and

-When the battery discharges to the set discharge cutoff point

There is a force charge request from battery

-When the battery voltage or SOC is lower than Generator Charge start Volt/SOC settings.

Generator Stop Conditions:

1. When the battery voltage or SOC is above the charging voltage/SOC set value.



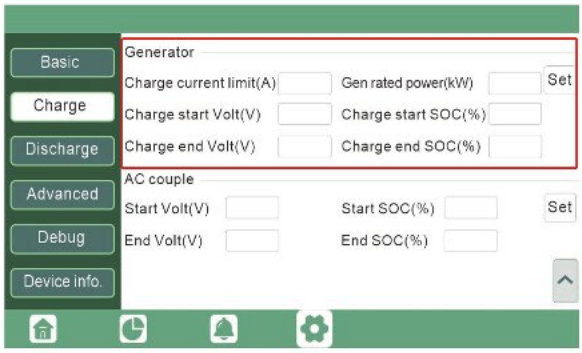

7.5.2 AC Coupling

This device supports AC coupling connection with existing on-grid solar system. The existing solar energy system needs to be connected to the GEN port of the inverter, however, due to this port being occupied, the generator function will be unavailable. It is also necessary to enable the AC COUPLE function.

After the AC couple function is enabled:
When the grid is on: The GEN terminal is connected to the grid terminal inside the inverter, the hybrid inverter will work in conjunction with the on-grid inverter to supply power to loads, charge batteries, any remaining energy will be exported to the grid.

When the grid is off: The GEN terminal is connected to the LOAD terminal inside the inverter. In this scenario, the loads will be primarily supplied by solar power. If the solar panels generate more power than the load consumption, the excess solar power will be stored in the battery. When solar power exceeds the combined power demand of the loads and the maximum battery charging power (e.g., when the battery is nearly full), the inverter will signal the on-grid inverter to reduce power via the frequency shifting power reduction mechanism. This helps maintain the balance between generation and consumption within the micro-grid system.

Start SOC(%): The SOC at which the AC coupled inverters are turned on when in off-grid mode. (50%~70% recommended)
End SOC(%): The SOC at which the AC coupled inverters are shut down when in off-grid mode. (90% recommended)

When On-Grid and Export to Grid are enabled, the AC-coupled inverter will always be on, and it will sell any extra power back to the grid. Ensure you are allowed to sell power to your utility provider when using AC-coupled PV arrays on-grid.

When Export to Grid is disabled, the AC-coupled inverter will remain off and could not work at on-grid mode to sell power.

When connecting the AC Couple, connect the meter as shown below to detect the power of the AC Couple. The connection direction of the meter is: The AC Couple points to the inverter in the positive direction.

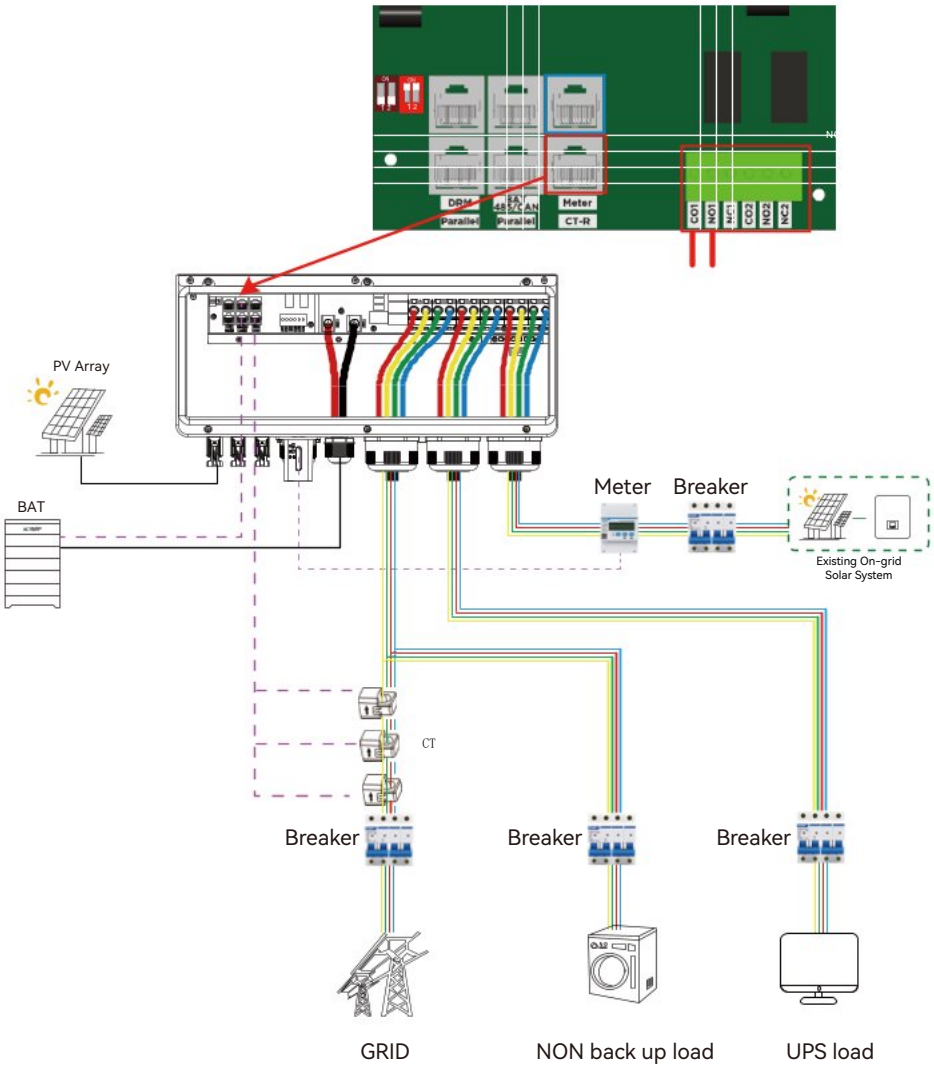

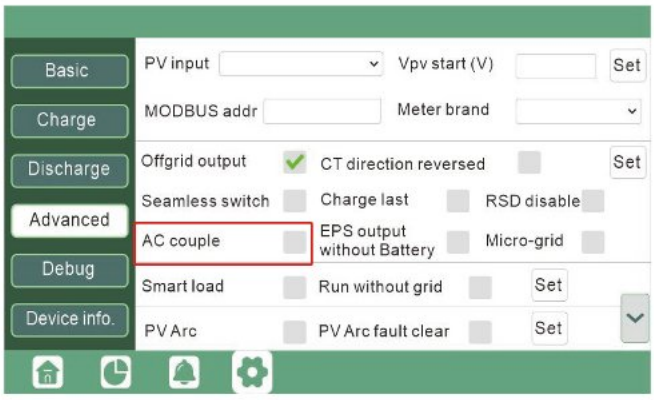

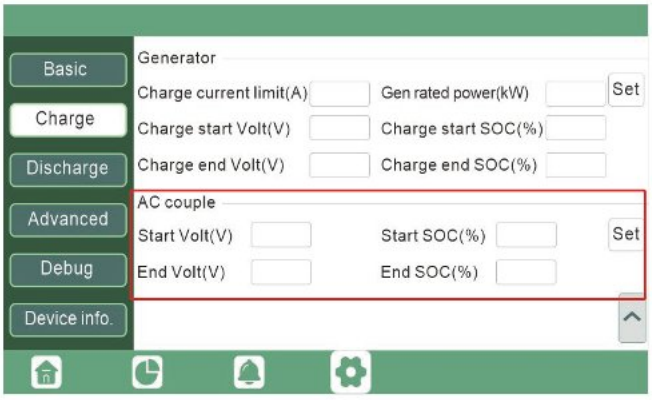

7.5.3 Smart Load

This function transforms the Gen input connection point into a load connection point. When this function is enabled, the inverter supplies power to this load when the battery SOC and PV power exceed user-defined values. For example, with Smart Load Start SOC set to 90%, Smart Load End SOC set to 85%, and Start PV Power at 300W, the operation is as follows: when PV power exceeds 300W and the battery SOC reaches 90%, the Smart Load Port activates automatically to power the load. It deactivates automatically when the battery SOC drops below 85% or PV power falls below 300W.

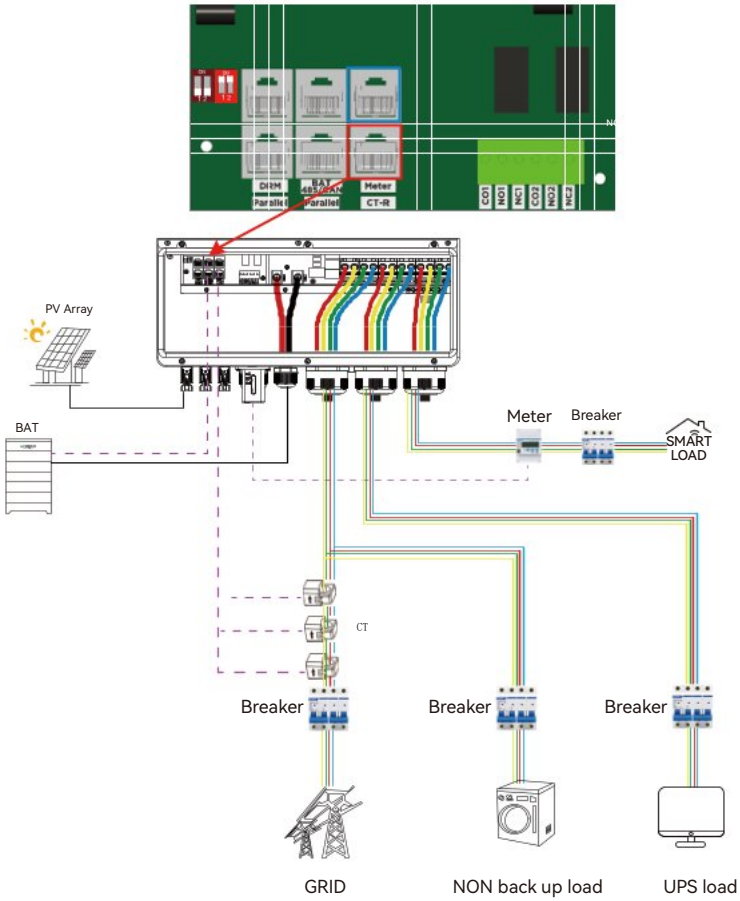

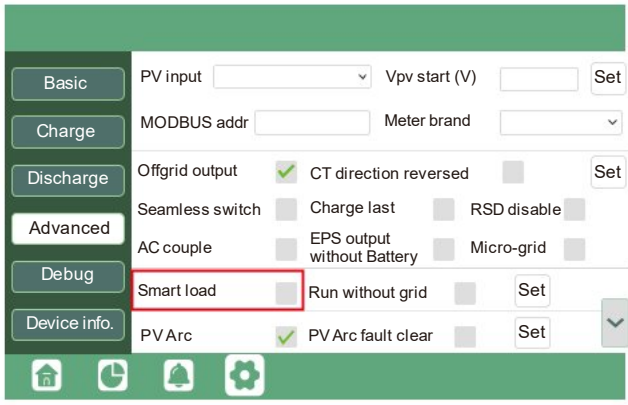

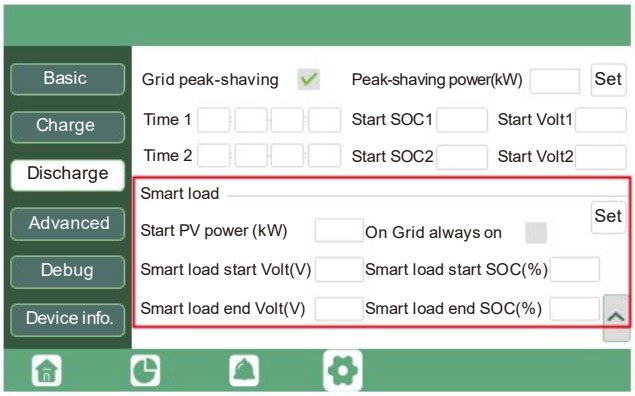

WARNING

When the Smart load is switched on, it is forbidden to connect the generator at the same time, otherwise the device will be damaged!

7.6 Grid Peak-shaving Function

Grid peak-shaving & Grid peak-shaving power(kW)

Is used to set the maximum power that the inverter will draw from its grid power.

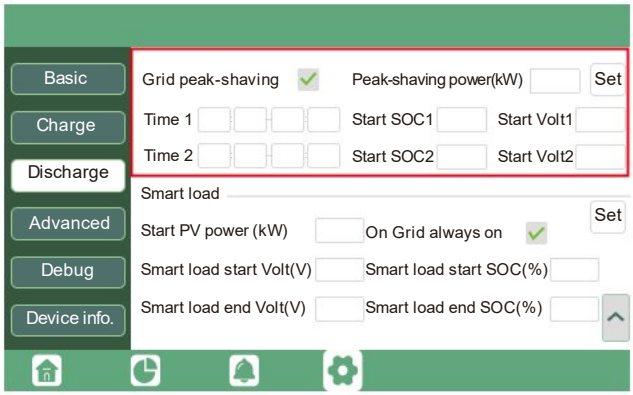

7.6.1 Setting Parameters

By clicking on the gear icon at the bottom of the screen, you'll access the inverter's parameter setting page

(1). Basic settings

Restart inverter: This option allows you to restart the system. Note that power may be interrupted during the restart.

Export to Grid: This setting is used for enabling or disabling the zero export function. If exporting solar power is not allowed, disable the "Export to Grid" option. Enabling "Zero export" ensures that export detection and adjustment occur every 20 milliseconds, preventing any solar power from being exported.If export is allowed, enable "Export to Grid" and set a maximum allowable export limit in "Max. Export to Grid (kw)".

Standby: This setting allows you to switch the inverter between normal and standby status. In standby status, the inverter will cease charging, discharging operations, and solar feed-in.

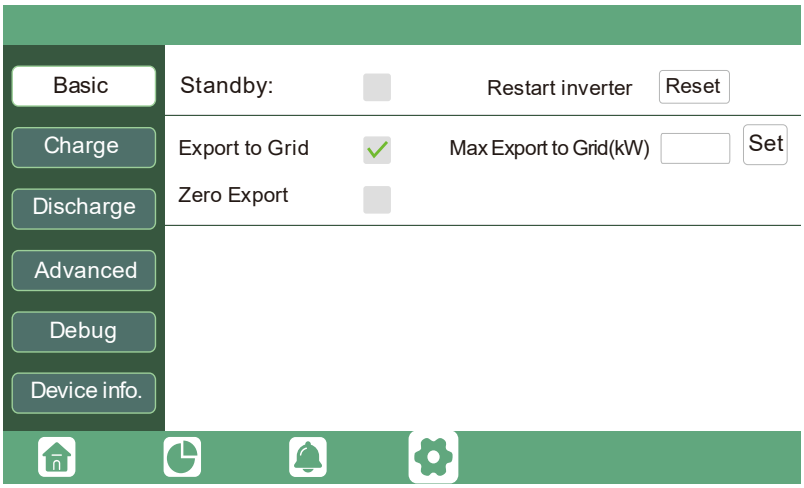

7.6.2 Charge setting

Operating Mode : Users can decide to use SOC or BatV to control charge and discharge logic depending on battery type.

Bat charge current limit(A): Users can set Max charge current.

AC Charge: Utility charge configuration If users want to use grid power to charge their battery, then they can enable "**AC Charge**", set time periods when AC charging can happen, AC Charge power(kW) to limit utility charging power, and "**Stop AC Charge SOC(%)**" as the target SOC for utility charging. "**Stop AC Volt(V)**" as the target battery voltage for utility charging.

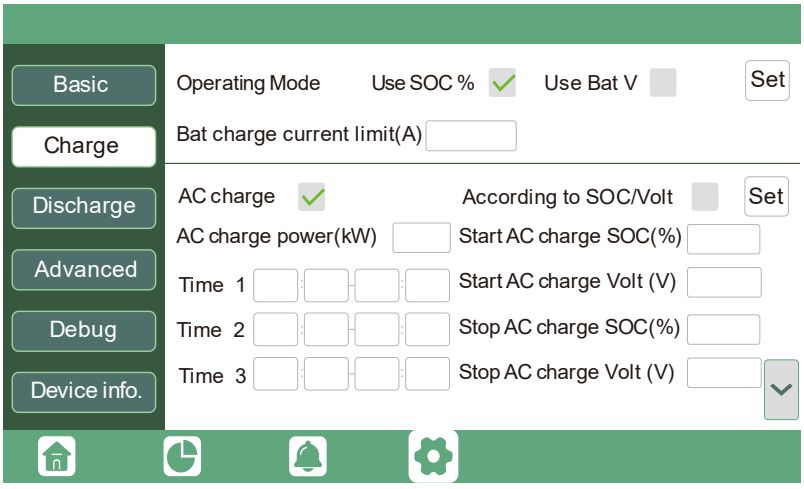

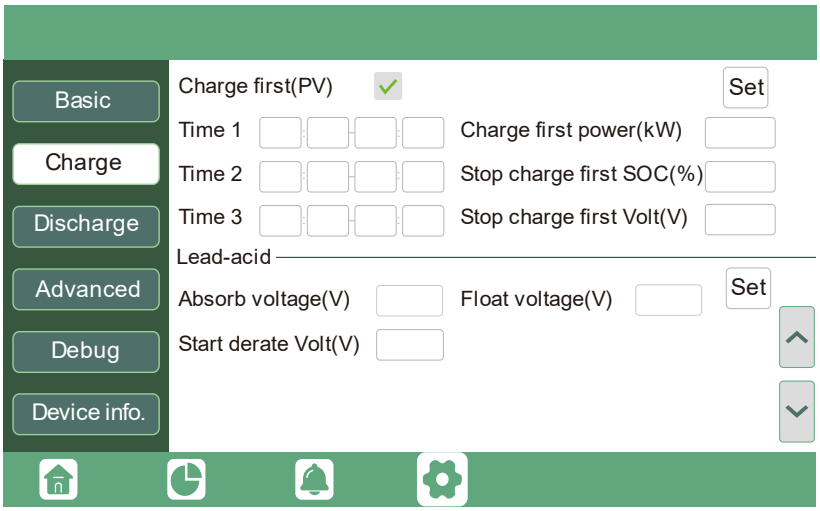

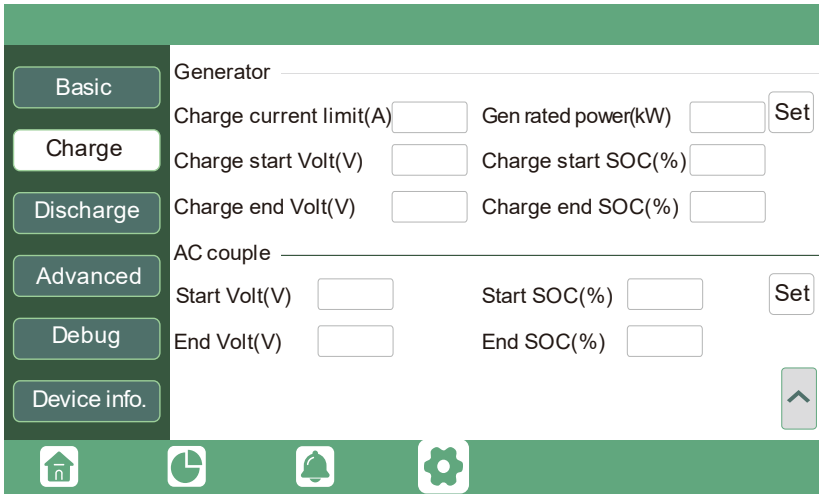

Charge first: PV charge configuration. When Charge First is enabled, PV will charge the battery as a priority, set time periods when PV charge can happen, charge first power(kW) to limit PV charge power, and "**Charge first SOC(%)**" as the target SOC for PV charge first. "Charge first Volt(V)" as the target battery voltage for PV Charge first. Lead acid: When using Lead-acid battery, you need to set parameters in these programs, Follow the battery manufacturer's recommendation.

Generator

Bat charge current limit(A): Set the Max. battery charge current from the Generator. The Generator will start charging according to the Charge start Volt/SOC, and stop charging when the battery voltage or SOC reaches the Charge end Volt/SOC value.

Gen rated power: Inverter has the peak-shaving function, when you need you can enable it and setup the Gen peakshaving power(W)

7.6.3 Discharge setting

Operating Mode

You can choose “Use SOC %” or “Use Bat V” to control the battery discharge state

Discharge current limit(A): The Max. discharge current from battery

Discharge start power(W): The Min. value can be set to 50.

When the inverter detects the import power is higher than this value, battery start discharging, otherwise battery will keep standby

On-grid Cut-off(%) and Off-grid Cut-off(%)

/On-grid Cut-off(V) and Off-grid Cut-off(V):

End of discharge SOC/Cut off voltage in on-grid and off-grid condition respectively.

Forced discharge: Settings for battery force discharge within certain time period. In the preset time period, the inverter will discharge battery at the power set by “discharge power”, until battery SOC or voltage reaches “Stop discharge ”value.

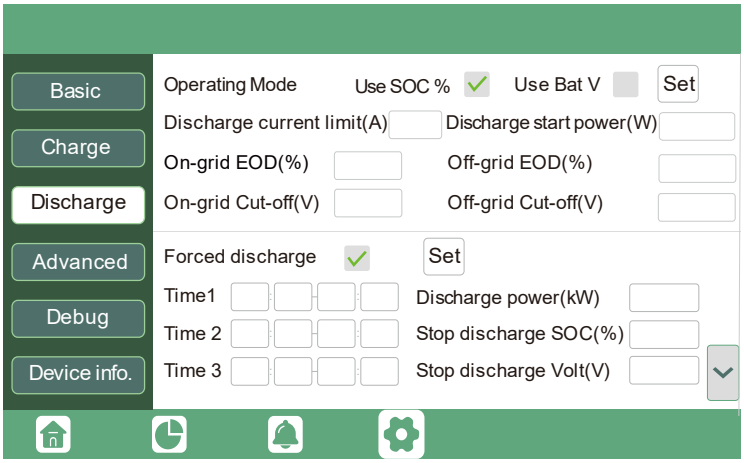

7.6.4 Advanced setting

Advanced setting is mainly by installer after installation.

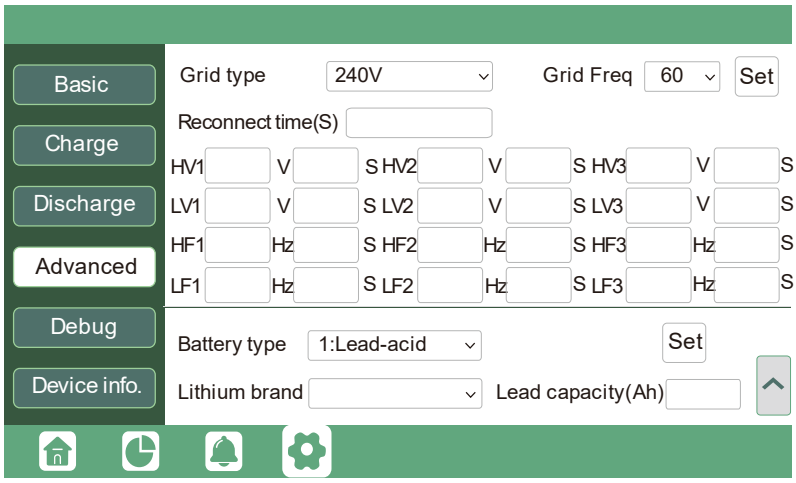

Grid type: You can choose by yourself, 220V, 230V, 240V.

Battery type: No battery, lead-acid or lithium-ion. If lead-acid battery is selected, please input correct battery capacity If lithium-ion battery is selected, please choose the battery brand in the Lithium brand drop down list.

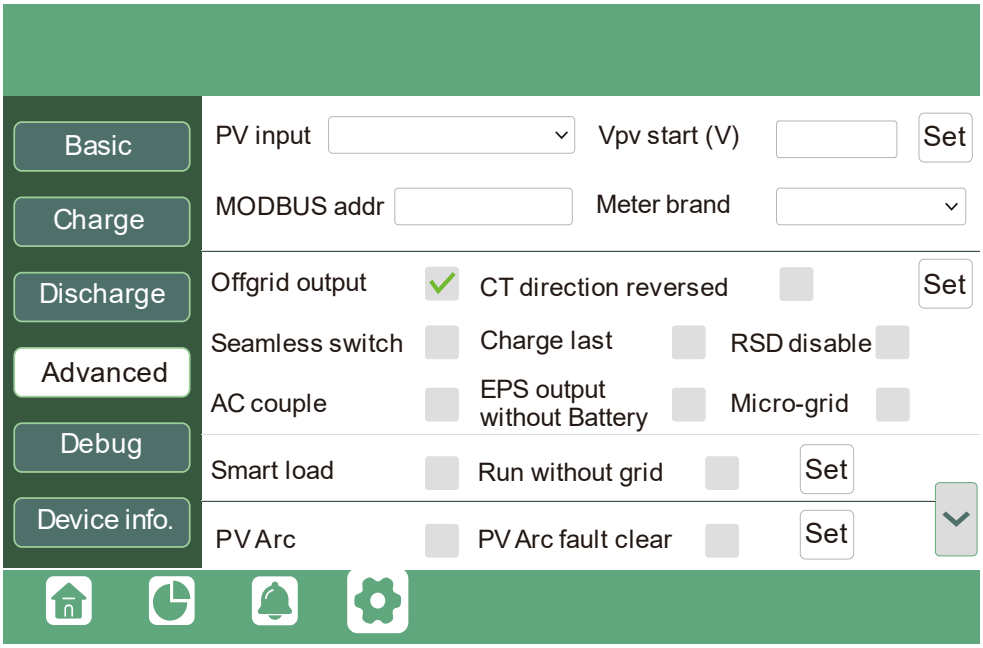

Meter type: Please select it according to the meter that's to be installed.
Charge last: When users want to use solar power in the order of loads -- grid export -- battery charging.
Offgrid output: It is for users to set if the inverter provides backup power or not when the grid is lost. If users want the load to be seamlessly transferred to the inverter backup power, "**Seamless switch**" must be enabled. If customers don't have a battery installed yet, but still wish to have inverter backup power with only solar panels connected, "**PV Grid Off**" can be enabled to use solar power to supply load when the grid fails or load-shedding happens. Micro-grid: This option only needs to be set when the generator is connected to the inverter's grid port. With this option enabled, the inverter will use AC power to charge the battery and won't export any power through the grid port if AC power is present at the inverter's grid port.

Role: The Role setting of the parallel system, only one inverter is allowed to be set as Primary, and the others are all Subordinate.
Phase: This is the phase code setting of the EPS output. The system will automatically detect the phase sequence of the inverter (consistent with the phase sequence of the connected Grid mains) and display on the inverter after it is connected to the grid.

Notice:
(1). All setting of parallel inverters need to be done in Standby or Fault Mode.
(2). If the system is connected to a lithium battery, the host of the lithium battery needs to communicate with the inverter which is set as Primary in the parallel system.
(3). Please keep all the setting are same for each inverter in the parallel system on the LCD or Web monitor.

7.7 Other

7.7.1 Self-test

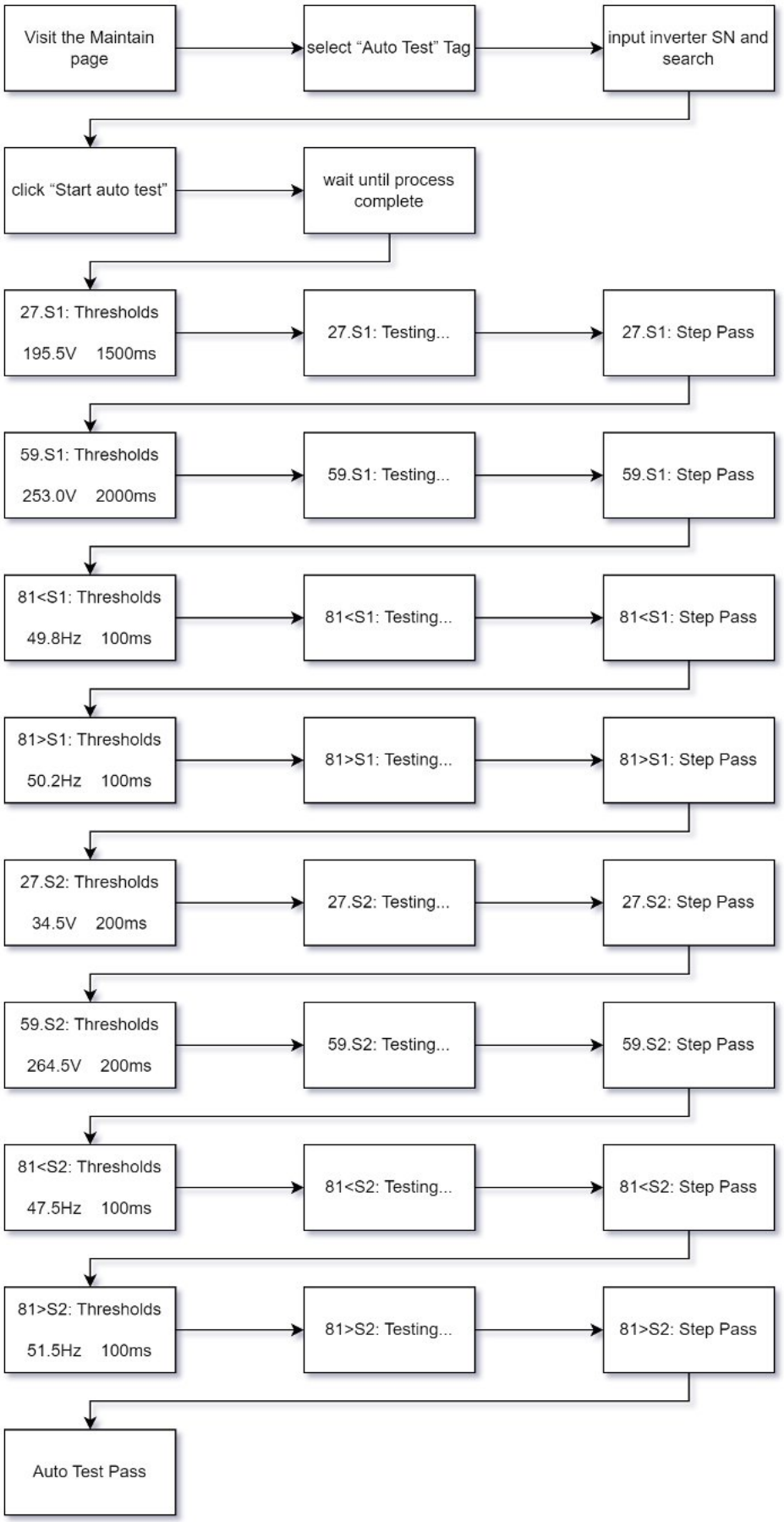

7.7.2 Automatic Limitation of Active Power Near Overvoltage Condition

Function Description

- When the grid voltage rises close to 110% of the rated voltage, the inverter will not disconnect but will automatically limit its active power output to help stabilize the grid.

Control Logic

- The inverter monitors the grid voltage continuously.
- If the voltage exceeds the activation threshold of +2% Vn (nominal voltage), the inverter will gradually reduce active output power.
- The power shall be reduced to 80% of PCMAX within 5 minutes (300 seconds) from the moment this threshold is exceeded.

Key Conditions

- Power reduction target: 80% of PCMAX
- Response time: ≤ 300 seconds from the instant of voltage threshold activation
- Grid connection: No disconnection occurs during this limitation process

8. System Maintenance

8.1 Start and Shutdown the Inverter

Start the inverter

Step 1. Make sure the inverter is properly connected to the batteries, panels, grid, etc(see system wiring diagram)
Step 2. Turn on the battery system firstly, then turn on the built-in battery breaker.
Step 3. Turn on PV DC disconnect switch, make sure the PV voltage of the strings is higher than 120V, and check if the inverter works in PV charge or PV charge back-up mode.
Step 4. Make sure step1 to step3 above work properly before turning on the grid power or generator breaker.
Step 5. Turn on the built-in load breaker before providing power to EPS load.
Step 6. Turn on the built-in grid breaker or generator breaker, check if the inverter can go to bypass mode and on-grid mode normally.

Shut down the inverter

> ⚠ DANGER
>
> Do not disconnect the battery, PV and AC input power under load.
> If there is emergency issue, and you have to shut down the inverter, please follow the steps as below.

> ⚠ WARNING
>
> After powering off the inverter system, there may still be residual electricity and heat in the enclosure, which could cause electric shock or burns. Therefore, it is recommended to wear insulated gloves and wait for 5 minutes after powering off the inverter system before performing any operations on it.

Step 1. Turn off the Grid breaker or Generator of the inverter.
Step 2. Switch off the load breaker.
Step 3. Turn off PV breaker and then battery breaker, waiting for the LCD to go off.

8.2 Regular Maintenance

To ensure the long term and proper operation of the inverter, it is recommended that regular maintenance is carried out as described in this section.

NOTICE

During maintenance tasks such as system cleaning, electrical connections check, and ensuring ground reliability, it is necessary to shut down the system.

System cleaning (once every 6 months to 1 year)

- Check the heat sink for any obstructions or dust accumulation periodically.

System operational check (once every 6 months)

- Check the appearance of the inverter for damage or deformation.
- Check the inverter for abnormal noises during its operation.
- Check that the inverter parameters are set correctly when the inverter is running.

Electrical connections check (6 months after the first commission, then every 6 months to once a year)

- Check the cable connections for detachment and looseness.
- Check the cable for damage, paying particular attention to the skin of the cable in contact with metal surfaces for signs of cuts.

Ground reliability (6 months after the first commission, then every 6 months to once a year)

- Check that the earth cable is securely in place.

Seal check (once every 6 months)

- Check that all terminals and interfaces are properly sealed.

8.3 Troubleshooting

8.3.1 Fault on the LCD

If the dot on the left of fault item is red, it means the fault is active. When it is grey, it means the fault is inactive.

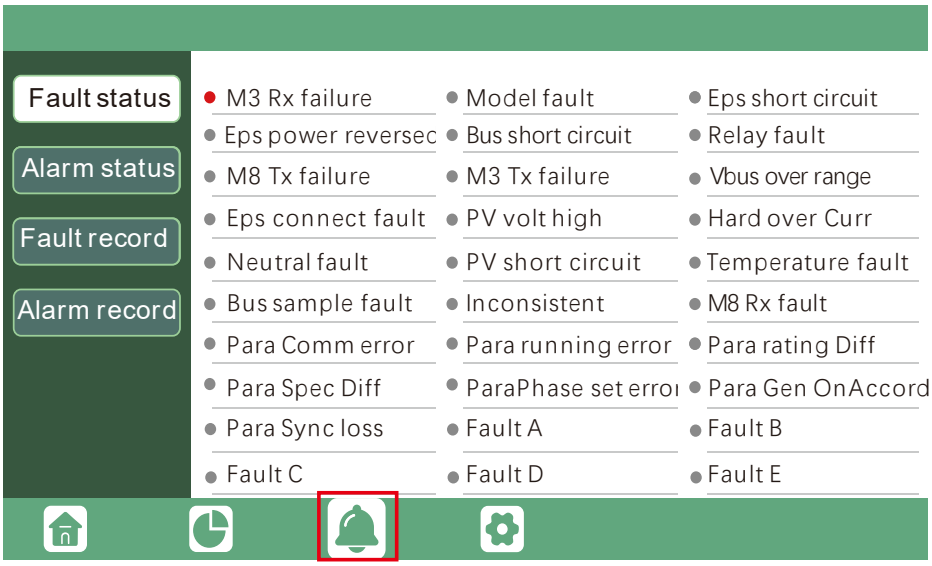

8.3.2 Fault Message & Troubleshooting are given below:

Fault	Meaning	Troubleshooting
M3 Rx failure	M3 microprocessor fails to receive data from DSP	Restart inverter, if the error still exists, contact your supplier.
Model fault	Incorrect model value	
EPS short circuit	Inverter detected short-circuit on EPS Load output terminals	1. Check if the R, S,T and N wires are connected correctly at inverter EPS Load output port; 2. Disconnect the EPS Load breaker to see if fault remains. If fault persists, contact your supplier.
EPS power reversed	Inverter detected power flowing into EPS Load port	Restart inverter, if the error still exists, contact your supplier.
Bus short circuit	DC Bus is short circuited	
Relay fault	Relay abnormal	
M8 Tx failure	DSP fails to receive data from M8 microprocessor	
M3 Tx failure	DSP fails to receive data from M3 microprocessor	
Vbus over range	DC Bus voltage too high	Please check if the PV string voltage is within the inverter specification. If the string voltage is within range, and this fault still appears, contact your supplier.
EPS connect fault	EPS Load port and grid port are connected mixed up	Check if the wires on EPS Load port and grid port are connected correctly. If the error exists, contact your supplier.
PV volt high	PV voltage is too high	Please check if the PV string voltage is within the inverter specification. If string voltage is within range, and this fault still appears, contact your supplier.

Hard over current	Hardware level overcurrent protection triggered	Restart inverter, if the error still exists, contact your supplier.
Neutral fault	Voltage between N and PE is greater than 30V	Check if the neutral wire is connected correctly.
PV short circuit	Short circuit detected on PV input	Disconnect all PV strings from the inverter. If the error persists, contact your supplier.
Temperature fault	Heat sink temperature too high	Install the inverter in a place with good ventilation and having no direct sunlight. If the installation site is okay, please check if the NTC connector inside the inverter is loose.
Bus sample fault	Inverter detected DC bus voltage lower than PV input voltage	Restart inverter, if the error still exists, contact your supplier.
Inconsistent	Sampled grid voltage values of DSP and M8 microprocessor are inconsistent	
M8 Rx fault	M8 microprocessor fails to receive data from DSP	
Para Comm error	Parallel communication abnormal	1. Please check whether the connection of the parallel cable is loose, please connect the parallel cable correctly 2. Please check and make sure the PIN status of CAN communication cable from the first to the end inverter rightly
Para primary loss	No primary in the parallel system	1. If a primary has been configured in the system, the fault will be automatically removed after the primary works. If so, you can ignore it. 2. If a primary has not been configured in the system, and there are only subordinate in the system, please set the primary first.
Para rating Diff	Rated power of parallel invertersare inconsistent	Please confirm that the rated power of all inverters are the same, or you can contact service to confirm

Para Phase set error	Incorrcet setting of phase in parallel	Please confirm that the wiring of the parallel system iscorrect first. In this case, then connect each inverter to the grid, the system will automatically detect the phase sequence,and the fault will be automatically resolved after the phase sequence is detected.
Para sync loss	Inconsistent generator connect in parallel	Some inverters are connected to generators, some are not. Please confirm that all inverters in parallel are connected to generators together or none of them are connected to generators
Para Gen un Accord	Parallel inverter fault	Restart inverter, if the error still exists, contact your supplier.

8.3.3 Alarm on the LCD

If the dot on the left of fault item is yellow, it means the fault is active. When it is grey, it means the fault is defective.

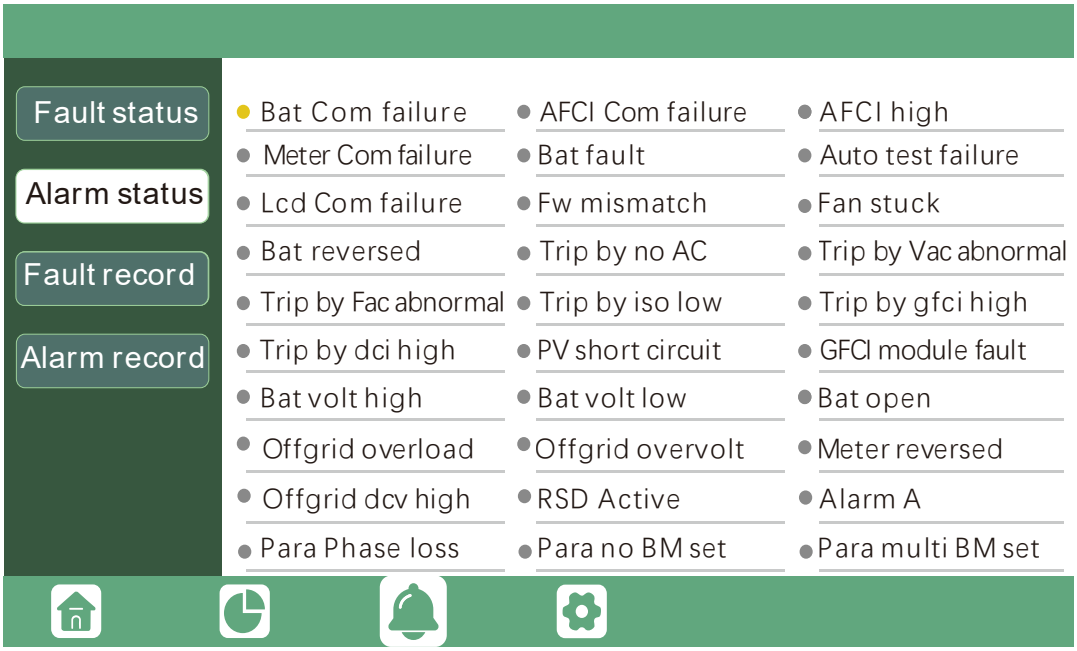

8.3.4 Alarm Message 8 Troubleshooting are given below:

Alarm	Meaning	Troubleshooting
Bat com failure	Inverter fails to communicate with battery	Check if communication cable is correct, and if you have chosen the correct battery brand on inverter LCD. If all is correct but this error persists, please contact your supplier.
AFCI com failure	Inverter fails to communicate with AFCI module	Restart inverter, if the error persists, contact your supplier.
AFCI high	PV arc fault is detected	Check each PV string for correct open circuit voltage and short circuit current. If the PV strings are in good condition, please clear the fault on inverter LCD.
Meter com failure	Inverter fails to communicate with the meter	1. Check if the communication cable is connected correctly and in good condition. 2. Restart inverter. If the fault persists, contact your supplier.
Bat Fault	Battery cannot charge or discharge	1. Check the battery communication cable for correct pinout on both inverter and battery end; 2. Check if you have chosen an incorrect battery brand; 3. Check if there is fault on battery's indicator. If there is fault, please contact your battery supplier.
Auto test failure	Auto test failed	Only applied to Italy model.
LCD com failure	LCD fails to communicate with M3 microprocessors	Restart inverter. If fault still exists, please contact your supplier.
Fwm mismatch	Firmware version mismatch between the microprocessors	
Fan stuck	Cooling fan(s) are stuck	
Trip by gfci high	Inverter detected leakage current on AC side	1. Check if there is ground fault on grid and load side; 2. Restart inverter. If the fault remains, contact your supplier.

Trip by dci high	Inverter detected high DC injection current on grid port	Restart inverter. If the fault remains, contact your supplier.
PV short circuit	Inverter detected short circuited PV input	1. Check if each PV string is connected correctly; 2. Restart inverter. If the fault remains, contact your supplier.
GFCI module fault	GFCI module is abnormal	Restart inverter. If fault still exists, contact your supplier.
Bat volt high	Battery voltage too high	Check if battery voltage exceeds 800V, battery voltage should be within inverter specification.
Bat volt low	Battery voltage too low	Check if battery voltage is under 100V, battery voltage should be within inverter specification.
Bat open	Battery is disconnected from inverter	Check battery breaker or battery fuse.
Offgrid overload	Overload on EPS port	Check if load power on inverter EPS port is within inverter specification.
Offgrid overvolt	EPS voltage is too high	Restart inverter. If fault still exists, contact your supplier.
Meter reversed	Meter is connected reversely	Check if meter communication cable is connected correctly on inverter and meter side.
Offgrid dcv high	High DC voltage component on EPS output when running off-grid	Restart inverter. If fault still exists, contact your supplier.
Para no BM set	Primary isn't set in the parallel system	Please set one of the inverters in the parallel system as the primary
Para multi BM set	Multiple Primary have been set in the parallel system	There are at least two inverters set as Primary in the parallel system, please keep one Primary and the other set as Subordinate.

8.4 Replacement of the Fan

- Before replacing the fan, ensure that the inverter is powered off.
- Use insulated tools and wear personal protective equipment when replacing the fan.

Operational steps:

Step 1. Remove the fan cover, disconnect the fan cable connections and remove the faulty fan.

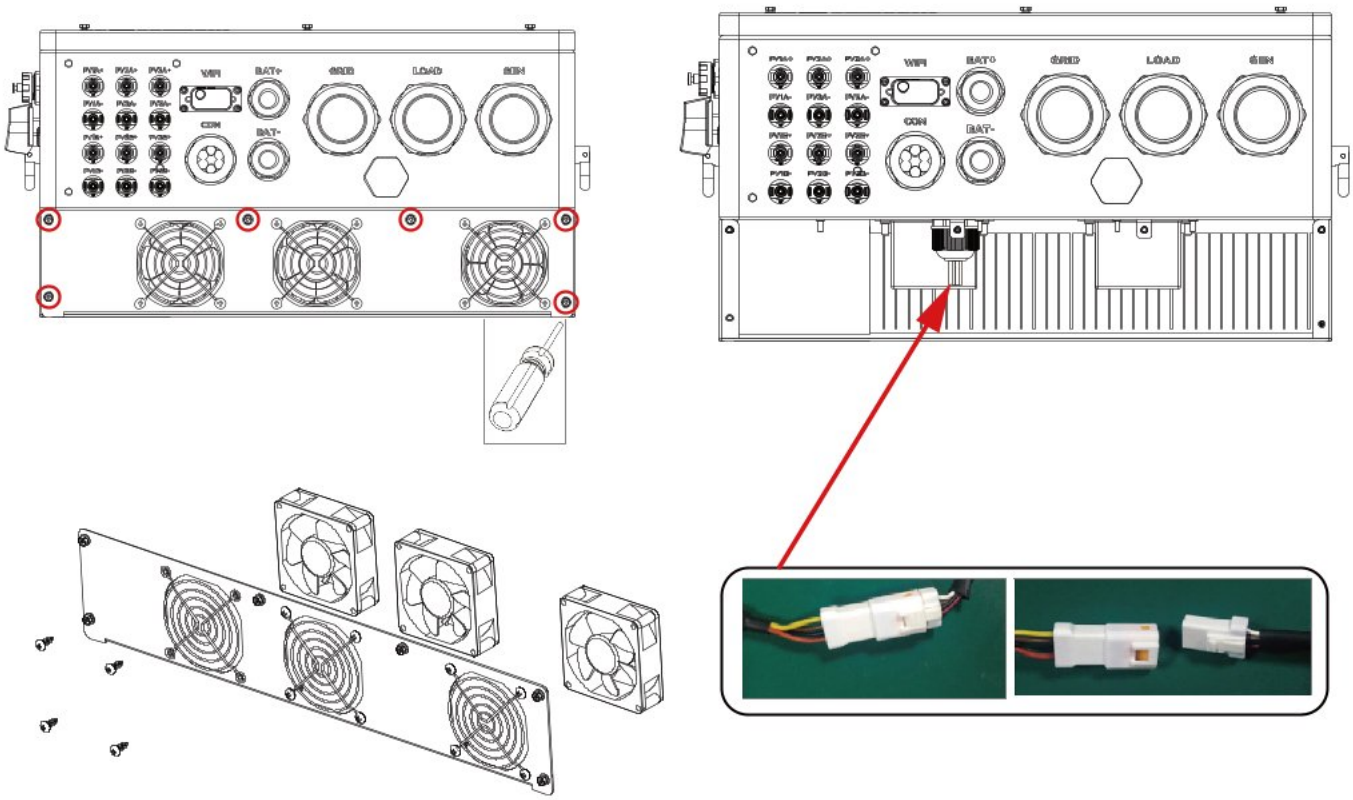

Step 2. Replace and install a new fan by following the reverse steps above.

9. Annex

9.1 Technical Data

Model number	TriP2-HB-3P 6K	TriP2-HB-3P 8K	TriP2-HB-3P 10K	TriP2-HB-3P 12K	TriP2-HB-3P 15K	TriP2-HB-3P 20K	TriP2-HB-3P 25K	TriP2-HB-3P 30K
Max. input power(W)	9000	12000	15000	18000	22500	30000	37500	45000
Max. input voltage(V)	1000							
MPPT voltage range(V)	200-900							
Start voltage(V)	100							
Nominal input voltage(V)	690							
Max. input current per MPPT tracker(A)	20			40				
Max. short-circuit current per MPPT tracker(A)	25			50				
No. of MPPT trackers	2			3				
No. of PV strings per MPPT tracker	1			2				
Battery Input Data								
Battery type	Lithium-ion/Lead-acid							
Communication interface	CAN/RS485							
Battery voltage range(V)	100-800							
Max. Charge/Discharge Current(A)	50			75/75				
Max. Charge/Discharge Power(W)	6000	8000	10000	12000	15000	20000	25000	30000
AC Grid output data								
Max. AC active power(W)	6000	8000	10000	12000	15000	20000	25000	30000
Max. / Nominal apprent power on grid (VA)	6000	8000	10000	12000	15000	20000	25000	30000
Nominal AC voltage(V)	3L/N/PE, 220/380Vac, 230/400Vac							

AC grid frequency(Hz)	50Hz/60Hz							
Max. output current(A)	9.1 (380V) 8.7 (400V)	12.1 (380V) 11.6 (400V)	15.2 (380V) 14.5 (400V)	18.2 (380V) 17.4 (400V)	22.7 (380V) 21.7 (400V)	30.3 (380V) 29.0 (400V)	37.9 (380V) 36.2 (400V)	45.5 (380V) 43.5 (400V)
Adjustable power factor	0.8leading...0.8lagging							
THDI	≤3%							
Off-grid output Data								
Nominal output apparent power(VA)	6000	8000	10000	12000	15000	20000	25000	30000
Nominal output voltage(V)	3L/N/PE, 220/380Vac, 230/400Vac							
Nominal output current(A)	9.1 (380V) 8.7 (400V)	12.1 (380V) 11.6 (400V)	15.2 (380V) 14.5 (400V)	18.2 (380V) 17.4 (400V)	22.7 (380V) 21.7 (400V)	30.3 (380V) 29.0 (400V)	37.9 (380V) 36.2 (400V)	45.5 (380V) 43.5 (400V)
Output Voltage Frequency(Hz)	50Hz/60Hz							
THDV(@ Linear Load)	≤3%							
Switching time	≤10ms							
Peak power/Duration	9000/ 5min	12000/ 5min	15000/ 5min	18000/ 5min	22500/ 5min	30000/ 5min	37500/ 5min	45000/ 5min
Efficiency								
Max. efficiency	97%							
Max. Charge/Discharge efficiency	96%							
Protection Devices								
DC switch	YES							
Insulation resistance monitoring	YES							
DC reverse polarity protection	YES							
AC/DC surge protection	YES							

AC/DC surge protection	YES
Anti-islanding protection	YES
AC over current protection	YES
AC over voltage protection	YES
General Data	
Operating temperature range(℃)	-25 ℃ ~ +60 ℃
Altitude(m)	2000m
Cooling concept	Smart cooling
Topology	Transformer-less
Meter Communication	RS485
Monitoring	WiFi+2G/4G(Optional)
Degree of protection	IP66
Installation	Wall mounting
Dimensions(W/H/D) mm)	480*703*257mm
Weight(Kg)	50kg
DC terminal	MC4
AC terminal	Cabel glands + terminal
Parallel	YES
Warranty	5 years/10 years

Note

YOUR RELIABLE ENERGY SOLUTION PARTNER

luxpowertek

Lux Power Technology Co., Ltd
Headquarter: +86 755 8520 9056
www.luxpowertek.com
Contact us: info@luxpowertek.com

092.20105AB