AUTOMATIC SYSTEMS
www.avtomatika-vorota.com.ua
интернет-гипермаркет ворот и автоматики №1 в Украине



IS158 Rev.05 04/06/2020

FIFTHY

Lampeggiante LED

Istruzioni originali

ROGER BRUSHLESS

EN - **Instructions and warnings for the installer**

ROGER TECHNOLOGY

1

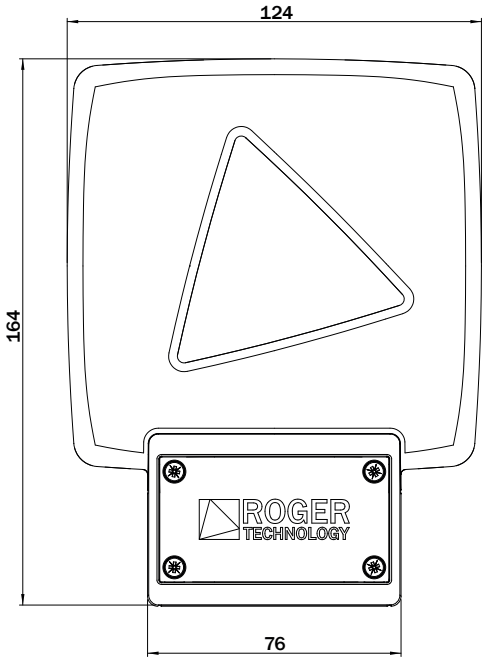

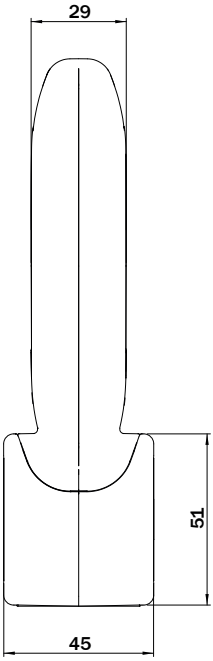

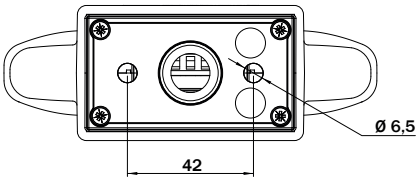

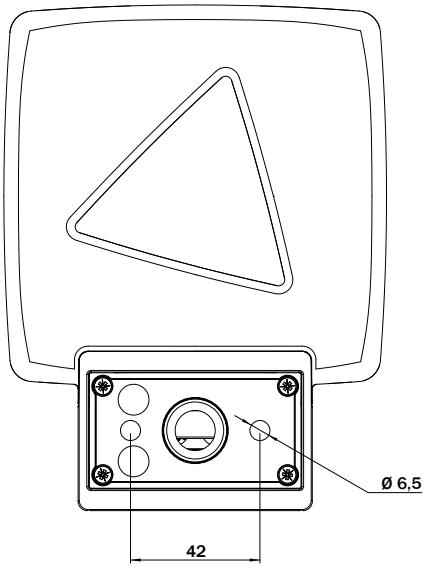

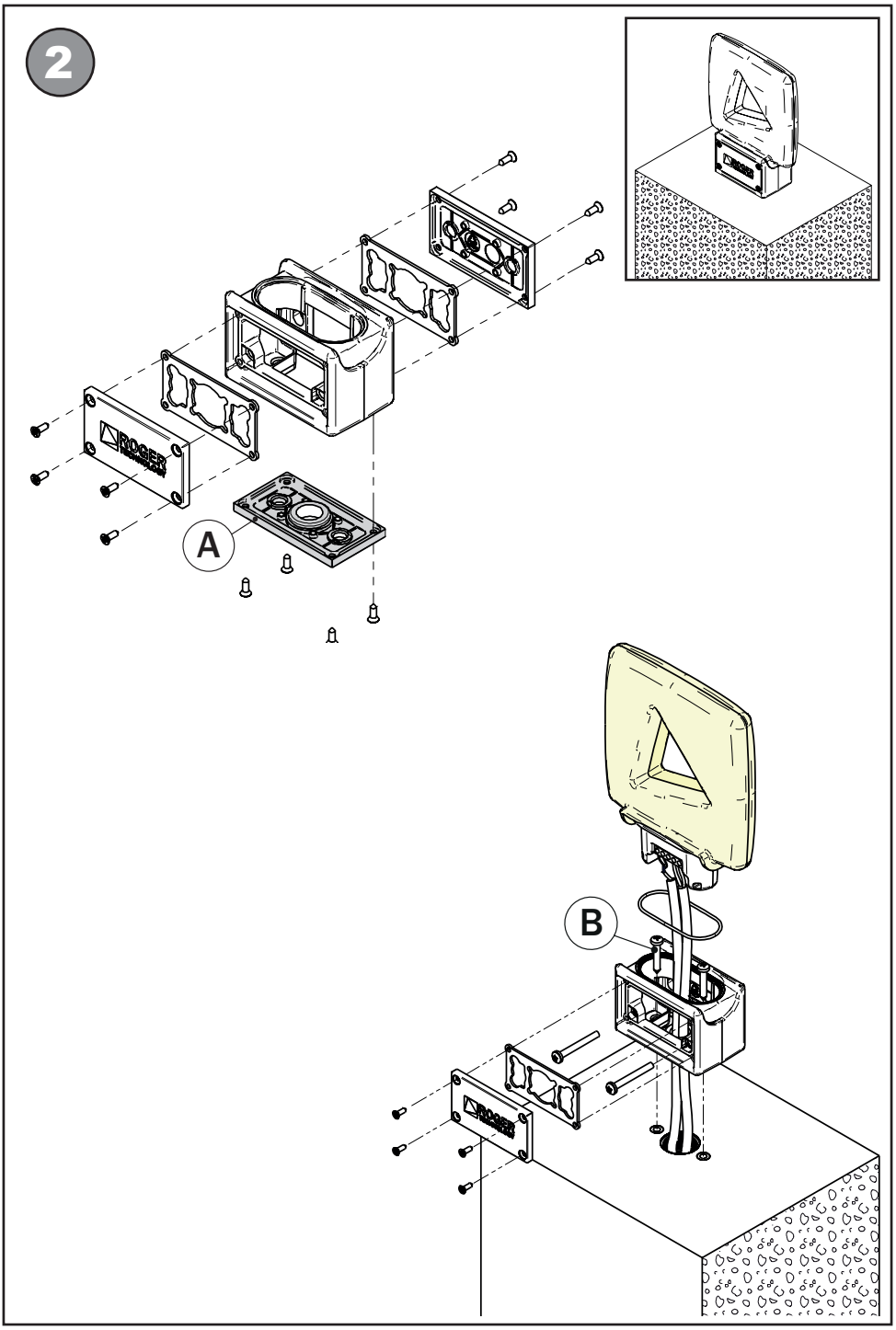
2
A
B

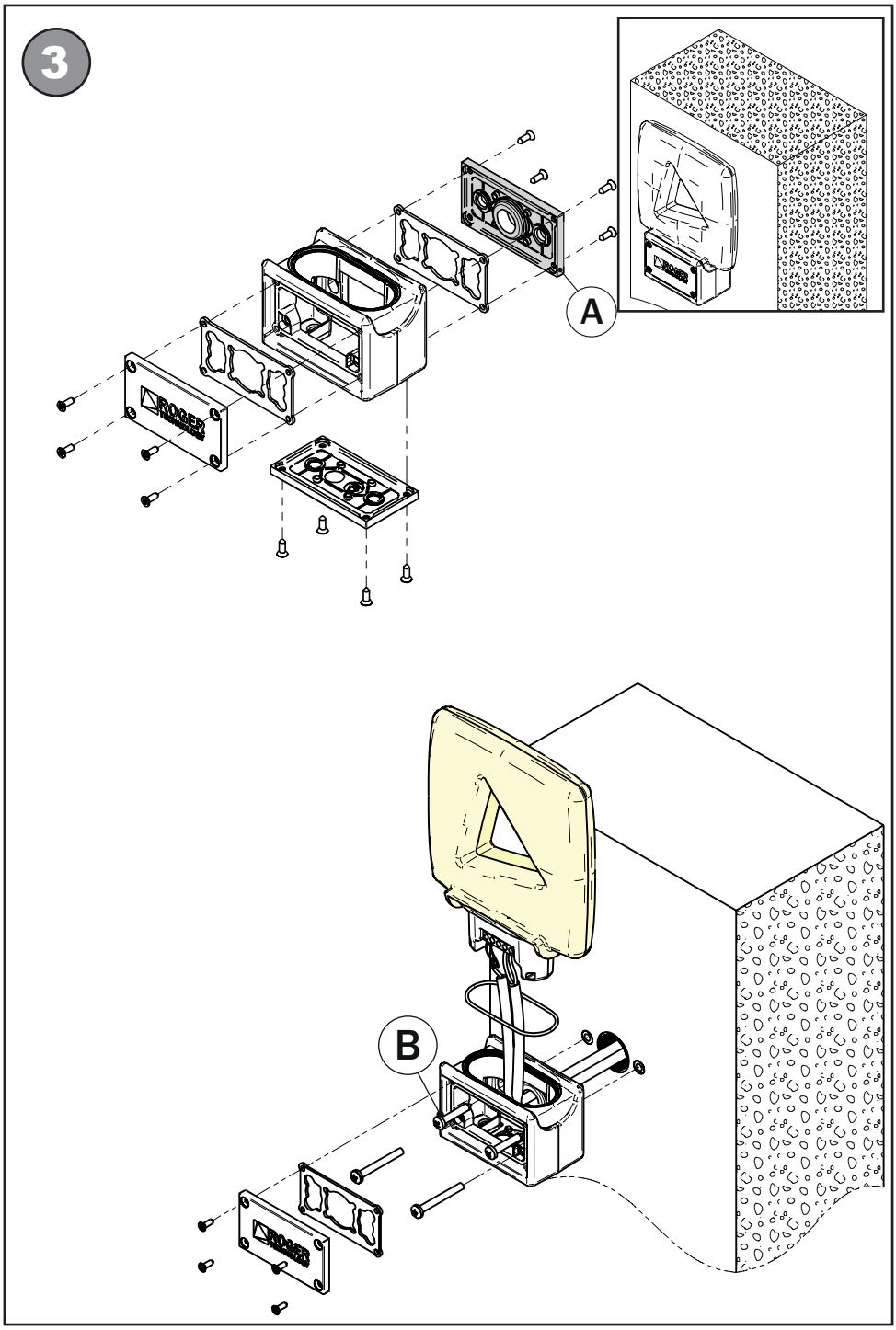
3
A
B

4

FIFTHY/230/OR FIFTHY/230

H70/10CC - H70/11CC

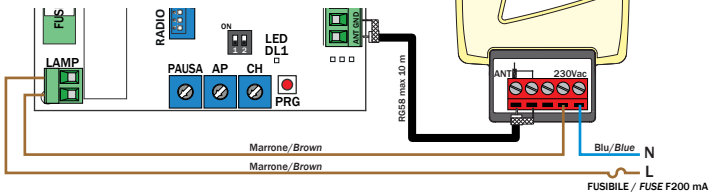

H70/104AC - 105AC

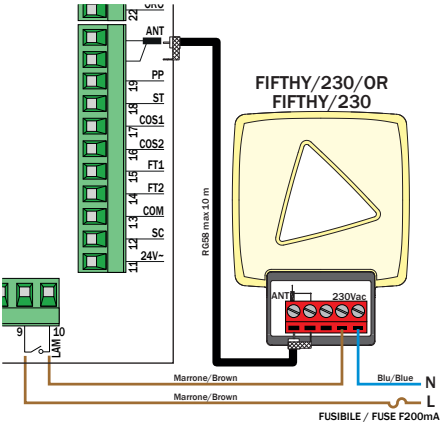

H70/200AC

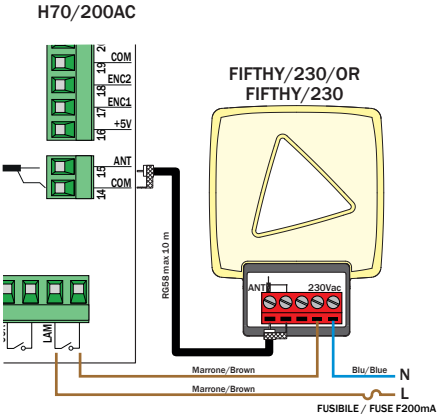

5

FIFTHY/24/OR FIFTHY/24

B70/1DC

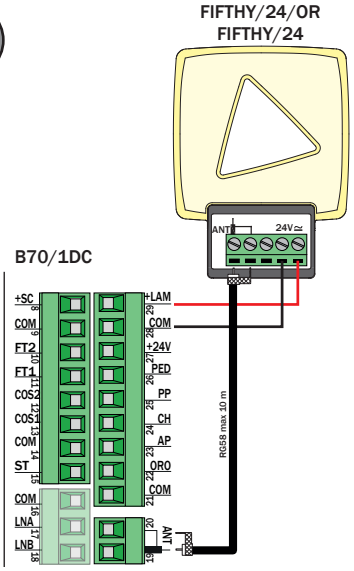

FIFTHY/24/OR FIFTHY/24

B70/1DCHP

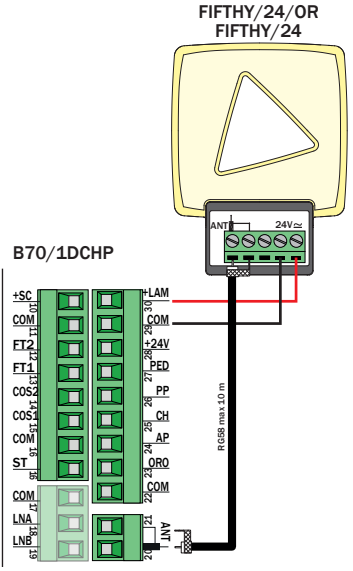

6

FIFTHY/24/OR FIFTHY/24

B70/2DC
B70/2B

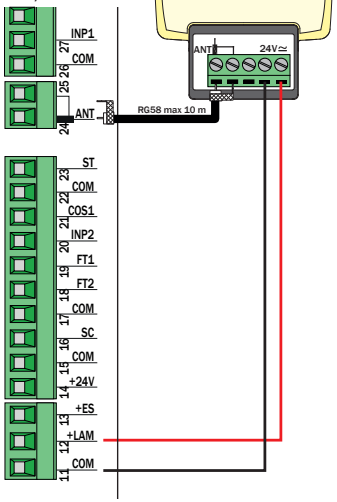

FIFTHY/24/OR FIFTHY/24

B70/2DCHP

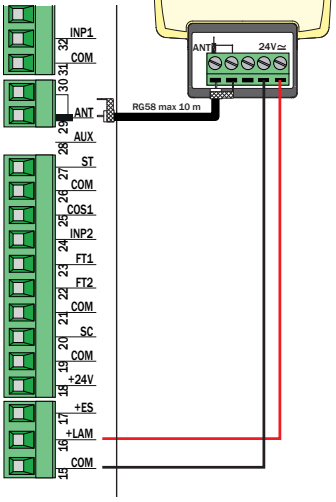

FIFTHY/24/OR FIFTHY/24

B70/1B

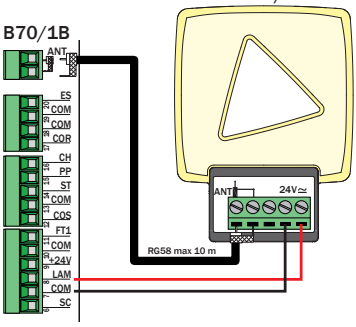

FIFTHY/24/OR FIFTHY/24

CTRL - CTRL/P

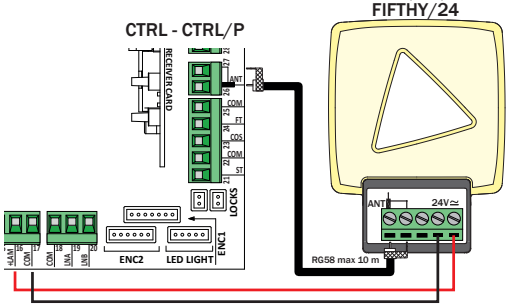

AUTOMATIC SYSTEMS www.avtomatika-vorota.com.ua интернет-гипермаркет ворот и автоматики №1 в Украине

EN

1 General safety precautions

Warning: incorrect installation may cause severe damage or injury. Read the instructions carefully before installing the product.

This installation manual is intended for qualified personnel only.
ROGER TECHNOLOGY cannot be held responsible for any damage or injury due to improper use or any use other the intended usage indicated in this manual.
Installation, electrical connections and adjustments must be performed by qualified personnel, in accordance with best practices and in compliance with applicable regulations. Before installing the product, make sure it is in perfect condition.
Disconnect the mains electrical power before performing any work. Also disconnect any buffer batteries used.
Only use original spare parts when repairing or replacing products.
The packaging materials (plastic, polystyrene, etc.) should not be discarded in the environment or left within reach of children, as they are a potential source of danger.

2 Product description

FIFTHY is a flashing warning lamp unit connectable to ROGER TECHNOLOGY control units.

3 Technical characteristics

	FIFTHY/24 FIFTHY/24/OR	FIFTHY/230 FIFTHY/230/OR
MAINS POWER VOLTAGE	24 Vac/dc	230 Vac 115 Vac
MAX MAINS POWER ABSORPTION	6,5 W	4 W
OPERATING TEMPERATURE	-20°C +55°C	
DEGREE OF PROTECTION	IP55	IP55

N.B.: the FIFTHY flashing lamp unit is assembled with thermosonic bonding technology to ensure an extremely high protection rating. In the event of breakage or malfunction, do not attempt to repair the flashing lamp unit and contact the customer support service or your dealer of choice.

4 Installation

- Ensure that the surface onto which the FIFTHY flashing lamp unit is to be installed is level, clean and not subject to vibration.
- Choose the mounting position: Figure 2 - top mounting position; Figure 3 - lateral mounting position.
- Drill the mounting surface with a maximum bit size of 6 mm.
- Assemble the flashing lamp unit with the cable housing base (A) at the bottom, as shown in fig. 2, or facing the wall, as shown in fig. 3.
- Ensure that the cable passage and the mounting base are sealed correctly if the mounting surface is not perfectly even.
- Make the electrical connections as shown in fig.4 (**FIFTHY/230V - FIFTHY/230V/OR**) or fig. 5-6 (**FIFTHY/24V - FIFTHY/24V/OR**).
- If the **FIFTHY/230, FIFTHY/230/OR** is used, protect the device with a F200mA (fast) fuse.
- Fasten the flashing lamp unit with the screws (B) and commercially available anchor plugs (not included).

5 Operation

Turn on the power supply.
Select the required flashing mode with the parameter **7F** on the control unit (except for **H70/10CC - 11CC**). This parameter is set as **7F00** by default (flash frequency 1 Hz, 0.5 s on, 0.5 s off).
If required, set the pre-manoeuvre warning flash function with parameter **A5** (except for **H70/10CC - 11CC**).

6 Disposal

The product may only be uninstalled by qualified technical personnel, following suitable procedures for removing the product correctly and safely. This product consists of numerous different materials. Some of these materials may be recycled, while others must be disposed of correctly at the specific recycling or waste management facilities indicated by local legislation applicable for this category of product. Do not dispose of this product as domestic refuse. Observe local legislation for differentiated refuse collection, or hand the product over to the vendor when purchasing an equivalent new product. Local legislation may envisage severe fines for the incorrect disposal of this product.
Warning! Some parts of this product may contain substances that are harmful to the environment or dangerous and which may cause damage to the environment or health risks if disposed of incorrectly.

7 Additional information and contact details

ROGER TECHNOLOGY is the exclusive proprietor holder of all rights regarding this publication. ROGER TECHNOLOGY reserves the right to implement any modifications without prior notification. Copying, scanning or any alterations to this document are prohibited without express prior authorised from by ROGER TECHNOLOGY.

8 Declaration of Conformity

I the undersigned, as acting legal representative of the manufacturer
Roger Technology - Via Botticelli 8, 31021 Bonisiolo di Mogliano V.to (TV)
hereby DECLARE that the appliance described below:
Description: Flashing light
Model: FIFTHY
Is conformant with the legal requisites of the following directives:
– 2014/30/EU; – 2014/35/EU; – 2011/65/CE
and that all the standards and/or technical requirements indicated as follows have been applied:
EN 61000-6-3; EN 61000-6-2
Last two figures of year in which marking was applied CE 16.

Place: Mogliano V.to

Date: 20/12/2016 Signature

ROGER TECHNOLOGY
Via S. Botticelli 8 • 31021 Bonisiolo di Mogliano Veneto (TV) • ITALIA
P.IVA 01612340263 • Tel. +39 041.5937023 • Fax. +39 041.5937024