ITEM	PART NUMBER
A	14963660
B	14963286
C	14947663
D	580-10246
E	14963570

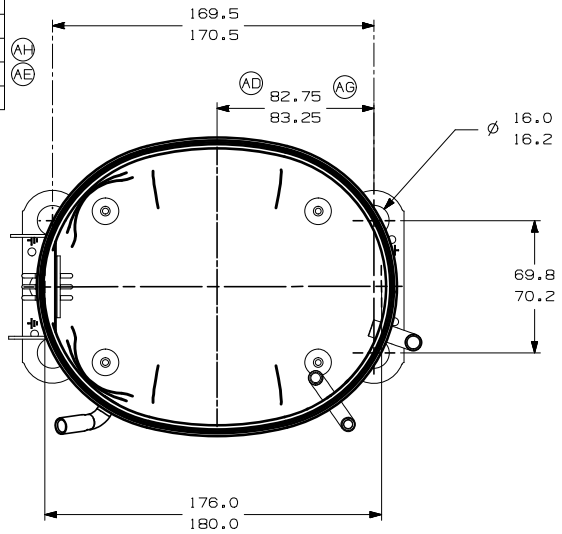

-AUXILIARY VIEW-
FASTENING DIMENSIONS

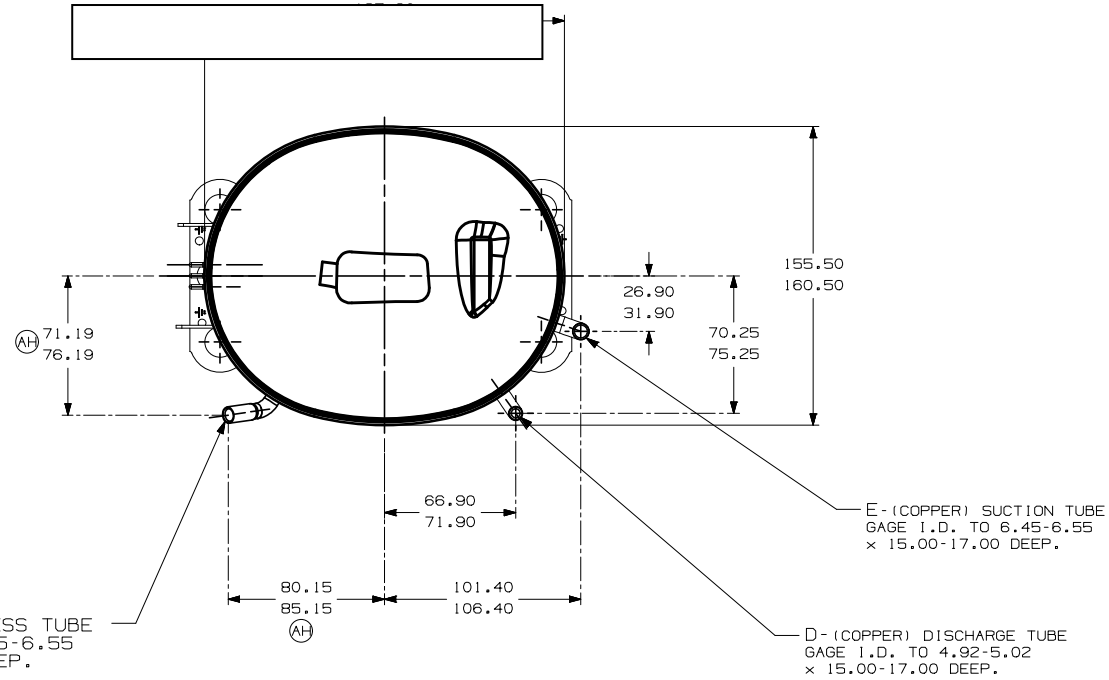

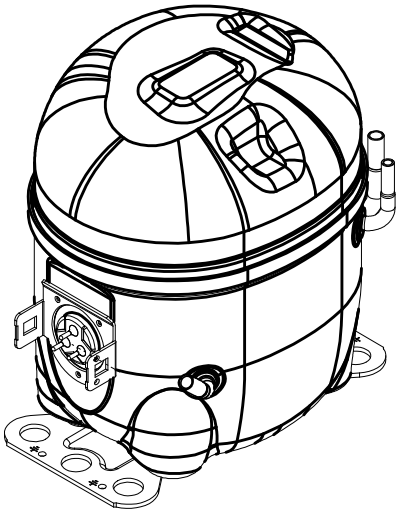

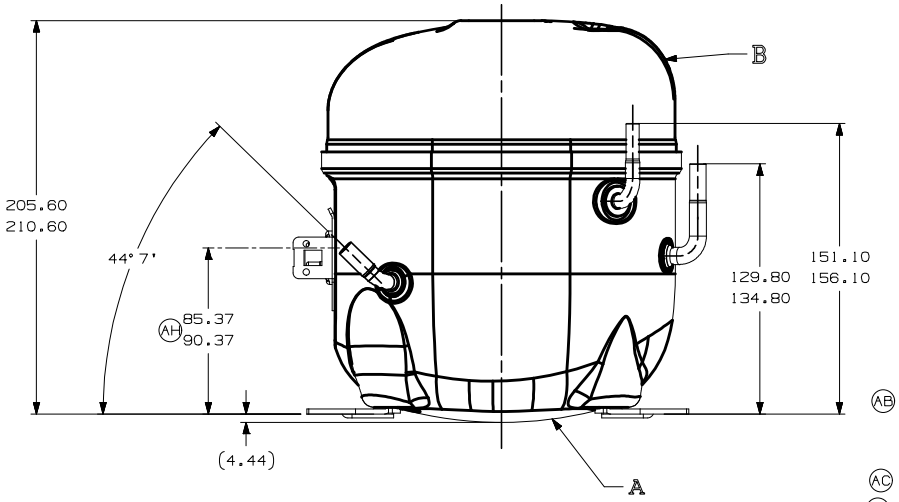

NOTES:
1- IF SPECIFIED IN BM. ASSEMBLE PARTS AS SHOWN.
2- SEE SPEC. "A-B" & A-C FOR PROCESS.
3- THERE CAN BE NO CREASES IN THE TUBES. (CREASES ARE SIGNS OR MARKS THAT ARE IN SOMETHING THAT BENDS)
AB 4- AFTER THE FOLDS IN THE TUBES, CANNOT BE ACCELERATED TO AREA EXCEEDING 30%.
5- TUBES OF SUCTION, DISCHARGE AND PROCESS MUST BE FREE OF INK ON 15.8mm (5/8") FROM TOP OF THE TUBES AS SPEC. T.P.Co. A-B4.
AC
AG 6- FOR SUPPLIER ENVIRONMENTAL REGULATORY REQUIREMENTS, SEE TECUMSEH GLOBAL SPEC. 08.

LT	LC	CHANGE	DATE
			EC102387 02-05-22 GM. RG.
		ERA 91.60-96.60	
		ERA 86.40-91.40	
		ERA 72.10-77.10	
		ERA 14963573	
AH	B5		
	D4		
	E5		
	F8		
AG	A/2 F/6	ALTERADA MEDIDA ERA:84.75-85.25 E ACRESC. NOTA 6	EC80775 14-02-18 PS. RG.
AF	--	RETIRADO DETALHE (AREA ISENTA DE PINTURA)	EC70368 06-06-16 AMP. WC.
AE	F/8	ALTERADO TUBO D ERA: 14963569	EC59887 03-03-15 PS. RG.
AD	F/7	ALTERADA MEDIDA ERA:82.75-83.25	EC48188 31-01-14 PS. RG.
AC	A/2	ADICIONADO NOTA	EC52840 AMP. MF 13-09-13
AB	A/2	REVISADA NOTAS 3 E 4	EC44035 08/06/12 PS. A.M
	A/2	ACRESCENTADA NOTAS 3 E 4	
AA		LIBERACAO	EC39812 19/09/11 J.B / A.M

THIS DRAWING OR PRINT (I) IS THE PROPERTY OF TECUMSEH DO BRASIL LTDA., AND CONTAINS PROPRIETARY AND CONFIDENTIAL INFORMATION BELONGING TO TECUMSEH DO BRASIL. (II) IS LOANED AND SUBJECT TO RECEIPT BY THE RECIPIENT OF THE CONDITION THAT NEITHER IT NOR THE INFORMATION CONTAINED THEREIN OR DISCLOSED OR MADE AVAILABLE TO THIRD PARTIES WITHOUT THE PRIOR WRITTEN CONSENT OF TECUMSEH DO BRASIL AND THAT SUCH INFORMATION ONLY AS EXPRESSLY AND SPECIFICALLY APPROVED IN WRITING BY TECUMSEH DO BRASIL MAY BE USED FOR ANY PURPOSE. (III) SHALL NOT BE COPIED OR TO ANY EXTENT WITHOUT TECUMSEH DO BRASIL PRIOR EXPRESS AND SPECIFIC WRITTEN CONSENT AND (IV) SHALL BE RETURNED OR DESTROYED AT TECUMSEH'S REQUEST PROMPTLY AFTER SUCH REQUEST IS MADE.

DO NOT SCALE THIS DRAWING. ALL FEATURES NOT DIMENSIONED MUST BE INSPECTED AS RECEIVED ON AT COMPRESSOR ASSEMBLY

THIRD ANGLE PROJECTION
UNITS: mm
DRAWING SIZE: A2

Q. A.SYMBOLS AS PROCEDURE 2.01.031 TECUMSEH OF BRAZIL
★ : CATEGORY I
▲ : CATEGORY II
■ : CATEGORY III
: CATEGORY IV

tecumseh

NAME	PART NO.
SALES COMPRESSOR	DCAE144

DWN.	CK.	APR.	SCALE	PAGE
J.BARBANO	ANDRE MARTINEZ	WALTER CORREA	1:2	1/1

DATE	REF.	FAMILY
09/06/11	-	AE2