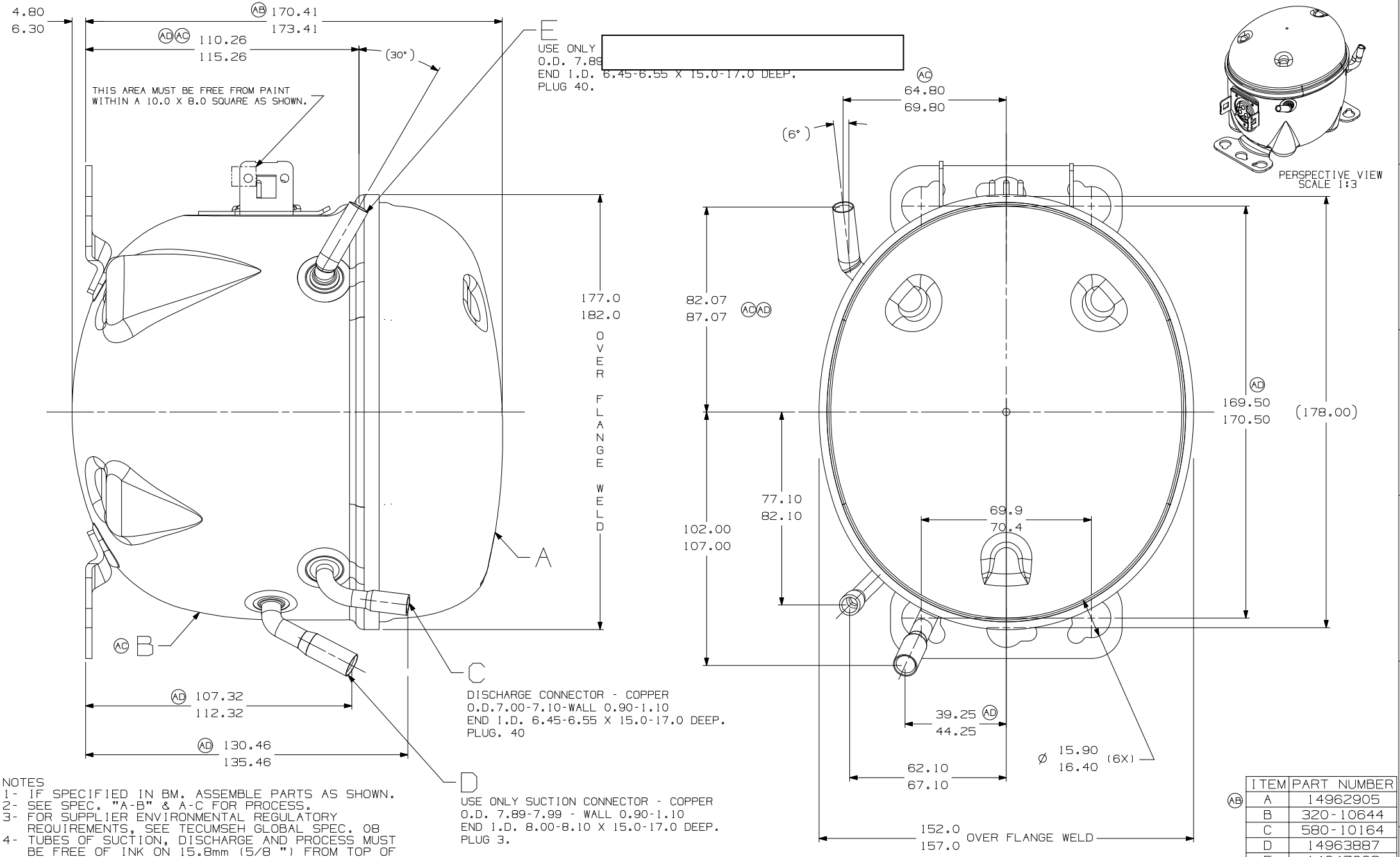

NOTES
1- IF SPECIFIED IN BM. ASSEMBLE PARTS AS SHOWN.
2- SEE SPEC. "A-B" & A-C FOR PROCESS.
3- FOR SUPPLIER ENVIRONMENTAL REGULATORY REQUIREMENTS, SEE TECUMSEH GLOBAL SPEC. 08
4- TUBES OF SUCTION, DISCHARGE AND PROCESS MUST BE FREE OF INK ON 15.8mm (5/8 ") FROM TOP OF THE TUBES AS SPEC. TECUMSEH AB-4.

ITEM	PART NUMBER
A	14962905
B	320-10644
C	580-10164
D	14963887
E	14947663

(AB)

LT	LC	CHANGE	DATE
B7	3F 4E 7C 8C	ERA: 106.9-111.9	EC107232 15-12-22 GM. HJ.
		ERA: 130.5-135.5	
B3		ERA: 39.2-44.2	
D1		ERA: 169.8-170.2	
E4		ERA: 82.2-87.2	
F7		ERA: 110.3-115.3	
--		ATUALIZADA CASAS DECIMAIS DE TODAS COTAS E REMOVIDOS CTGS	
AD			
		ATUALIZADA 320-10644	EC99010 13-07-21 CIAS. CS.
AC			
F7		ERA: 171.6-174.6	EC90671 25-06-19 CADEM R.
B1		ERA: 320-10176 PASSOU PARA 14962905	
AB			
--		LIBERAÇÃO	EC86464 05-11-18 AMP MF
AA			

THIS DRAWING OR PRINT (1) IS THE PROPERTY OF TECUMSEH DO BRASIL LTDA., AND CONTAINS PROPRIETARY AND CONFIDENTIAL INFORMATION BELONGING TO TECUMSEH DO BRASIL. (11) IS LOANED AND SUBJECT TO RECEIPT ON THE EXPRESS AND SPECIFIC CONDITION THAT NEITHER IT NOR THE INFORMATION CONTAINED THEREIN OR DISCLOSED OR MADE AVAILABLE TO ANY PERSON WITHOUT PRIOR EXPRESS (III) WRITTEN CONSENT OF TECUMSEH DO BRASIL AND THAT SUCH INFORMATION ONLY AS EXPRESSLY AND SPECIFICALLY APPROVED IN WRITING BY TECUMSEH DO BRASIL AND OTHERWISE (IV) SHALL NOT BE COPIED OR TO ANY EXTENT WITHOUT TECUMSEH DO BRASIL PRIOR EXPRESS AND SPECIFIC WRITTEN CONSENT AND (IV) SHALL BE RETURNED TO TECUMSEH DO BRASIL UPON REQUEST PROMPTLY AFTER SUCH REQUEST IS MADE.

DO NOT SCALE THIS DRAWING. ALL FEATURES NOT DIMENSIONED MUST BE INSPECTED AS RECEIVED ON AT COMPRESSOR ASSEMBLY

THIRD ANGLE PROJECTION

UNITS: mm

DRAWING SIZE: A2

Q. A.SYMBOLS AS PROCEDURE 2.01.031 TECUMSEH OF BRAZIL

★ : CATEGORY I
▲ : CATEGORY II
■ : CATEGORY III
: CATEGORY IV

tecumseh

NAME	PART NO.
SALES COMPRESSOR	DCTC059

DWN.	CK.	APR.	SCALE	PAGE
A. MARCOS	RAMIRO	ZANATTA	1:1	1/1

DATE	REF.	FAMILY
03-09-18	-	TC