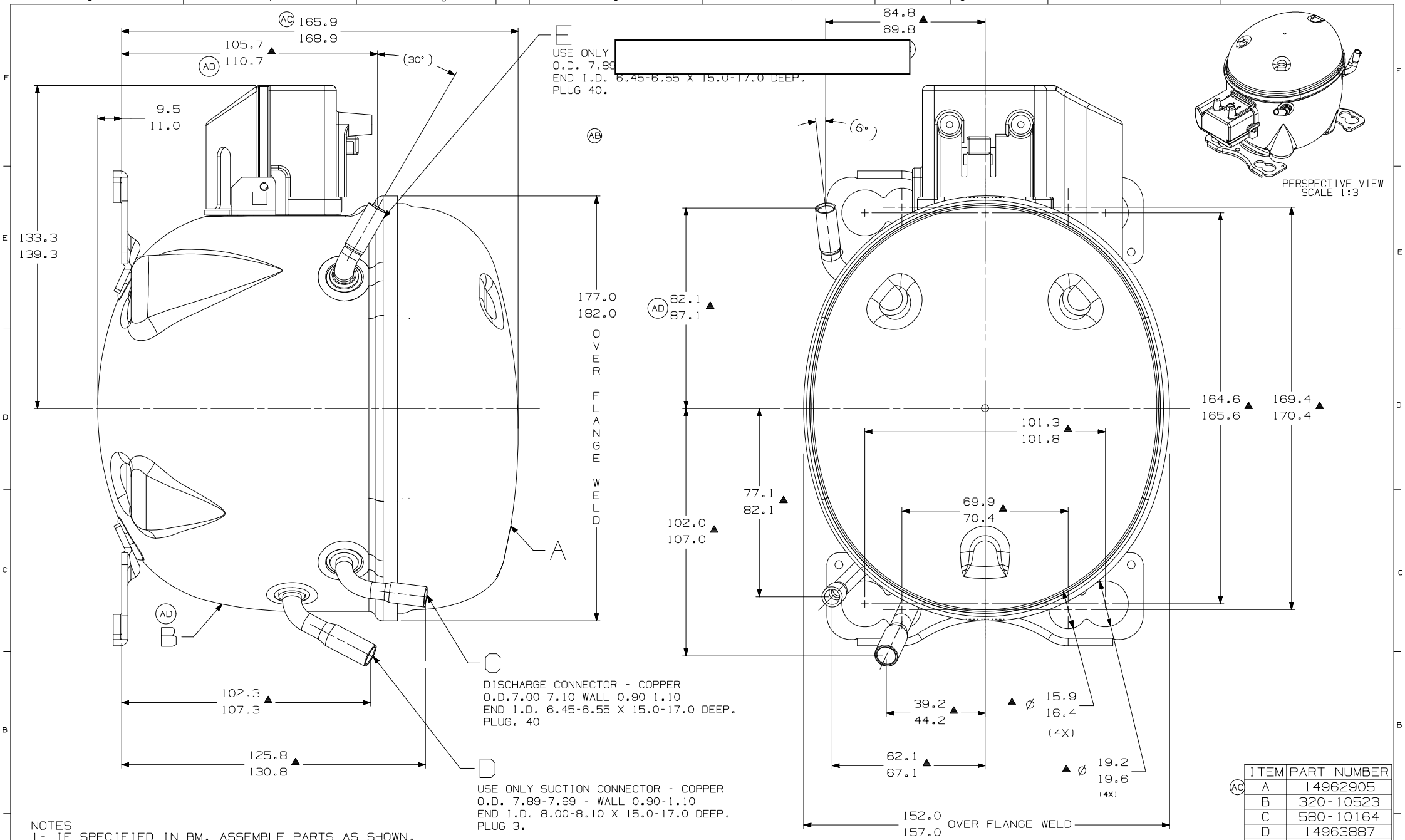

ITEM	PART NUMBER
A	14962905
B	320-10523
C	580-10164
D	14963887
E	14947663

NOTES
1- IF SPECIFIED IN BM. ASSEMBLE PARTS AS SHOWN.
2- SEE SPEC. "A-B" & A-C FOR PROCESS.
3- FOR SUPPLIER ENVIRONMENTAL REGULATORY REQUIREMENTS, SEE TECUMSEH GLOBAL SPEC. 08
4- TUBES OF SUCTION, DISCHARGE AND PROCESS MUST BE FREE OF INK ON 15.8mm (5/8 ") FROM TOP OF THE TUBES AS SPEC. TECUMSEH AB-4.

		EC98010 12-07-21 CIAS. CS.	EC90671 25-06-19 CADEM R.	EC82134 08/06/2018 CADEM R.	EC85941 25-11-15 AMP MF					
		ATUALIZADA 320-10523	ERA: 167.0-170.0 / ERA: 320-10176 PASSOU PARA 14962905	RETIRADA AREA DE PINTURA DO FURO DO FENCE	LIBERACAO					
	3F 5E 7F 8C	AD	F7 / B1	AC	F5	--	AA	LT	LC	CHANGE	DATE

THIS DRAWING OR PRINT (1) IS THE PROPERTY OF TECUMSEH DO BRASIL LTDA., AND CONTAINS PROPRIETARY AND CONFIDENTIAL INFORMATION BELONGING TO TECUMSEH DO BRASIL. (11) IS LOANED AND ACCEPTED BY THE RECIPIENT UPON THE EXPRESS SPECIFIC CONDITION THAT NEITHER IT NOR THE INFORMATION CONTAINED THEREIN OR DISCLOSED OR MADE AVAILABLE TO OTHERS WITHOUT THE CONSENT OF TECUMSEH DO BRASIL AND THAT SUCH INFORMATION ONLY AS EXPRESSLY AND SPECIFICALLY APPROVED IN WRITING BY TECUMSEH DO BRASIL MAY BE USED FOR THE PURPOSE (111) SHALL NOT BE COPIED OR TO ANY EXTENT WITHOUT TECUMSEH DO BRASIL PRIOR EXPRESS AND SPECIFIC WRITTEN CONSENT AND (IV) SHALL BE RETURNED TO TECUMSEH DO BRASIL UPON REQUEST PROMPTLY AFTER SUCH REQUEST IS MADE.

DO NOT SCALE THIS DRAWING. ALL FEATURES NOT DIMENSIONED MUST BE AS RECEIVED ON AT COMPRESSOR ASSEMBLY

THIRD ANGLE PROJECTION

UNITS: mm

DRAWING SIZE: A2

Q. A.SYMBOLS AS PROCEDURE 2.01.031 TECUMSEH OF BRAZIL

★ : CATEGORY I
▲ : CATEGORY II
■ : CATEGORY III
: CATEGORY IV

tecumseh

NAME	PART NO.
SALES COMPRESSOR	DCTC038

DWN.	CK.	APR.	SCALE	PAGE
A. MARCOS	MARCOS FONTES	WALTER CORREA	1:1	1/1
DATE 15-06-15	REF. -		FAMILY TC	