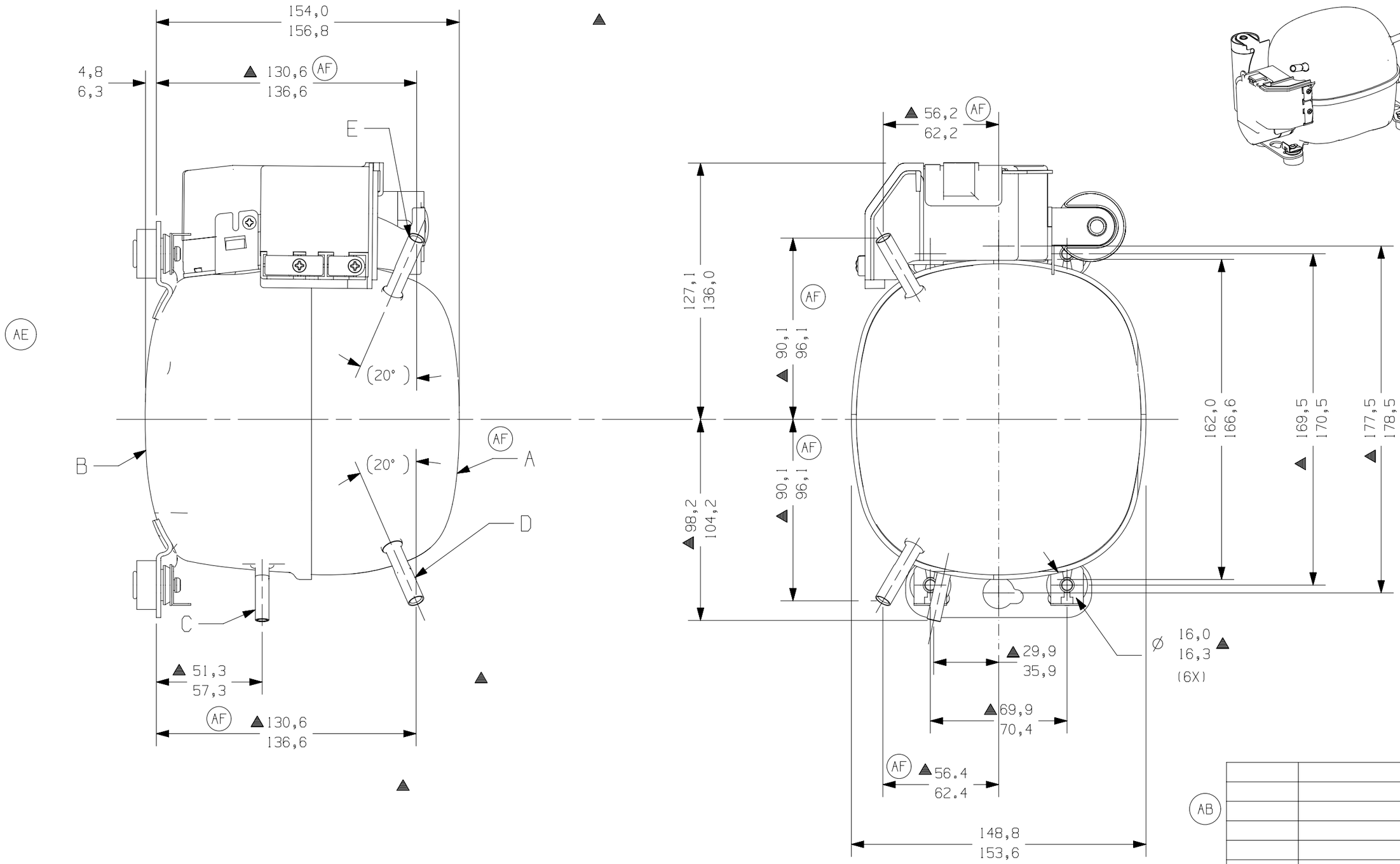

LT	LC	CHANGE	DATE
AF	2D 3B 3C 4C 5B 5D	ATUALIZADA 320-10154	EC98010 01-07-21 CIAS. CS.
AE	C6	RETIRADA AREA DE PINTURA DO FURO DO FENCE	EC82134 08/06/2018 CADEM R.
AD	B2	ERA 320-10371	EC83917 17-04-18 AMP RG
AC	--	REVISADO SUPORTE DE MONTAGEM CONF. CARC.COMPL.CANOS	EC63533 08-07-15 AMP WC
AB	--	REVISADO GERAL ALTERADO DE CARCACA E TAMPA ELETROSOLDADO PARA FLANGEADO	EC57505 16-04-14 AMP MF
AA	--	LIBERACAO	EC6610 14/02/07 T. M.

THIS DRAWING OR PRINT (I) IS THE PROPERTY OF TECUMSEH DO BRASIL LTDA. AND CONTAINS PROPRIETARY AND CONFIDENTIAL INFORMATION BELONGING TO TECUMSEH DO BRASIL. (II) IS MADE AVAILABLE TO THE RECIPIENT ON THE EXPRESS AND SPECIFIC CONDITION THAT NEITHER IT NOR THE INFORMATION CONTAINED THEREON OR DISCLOSED OR MADE AVAILABLE TO OTHERS WITHOUT THE EXPRESS AND SPECIFIC WRITTEN CONSENT OF TECUMSEH DO BRASIL AND THAT SUCH INFORMATION ONLY AS EXPRESSLY AND SPECIFICALLY APPROVED IN WRITING BY TECUMSEH DO BRASIL AND NOT OTHERWISE.(III) BELONGING TO TECUMSEH DO BRASIL. (II) IS OUT TECUMSEH DO BRASIL PRIOR EXPRESS AND SPECIFIC WRITTEN CONSENT AND (IV) SHALL BE RETURNED BY THE RECIPIENT LATTER'S REQUEST PROMPTLY AFTER SUCH REQUEST IS MADE.

DO NOT SCALE THIS DRAWING. ALL FERROUS MATERIALS MUST NOT BE MAGNETIZED AS RECEIVED OR AT COMPRESSOR ASSEMBLY

THIRD ANGLE PROJECTION

UNITS: mm

DRAWING SIZE: A3

Q. A.SYMBOLS AS PROCEDURE 2.01.031 TECUMSEH OF BRAZIL

✡ : CATEGORY I

▲ : CATEGORY II

▥ : CATEGORY III

: CATEGORY IV

Tecumseh®

NAME	SALES COMPRESSOR
PART NO.	BRDCTH301
SCALE	1:2
PAGE	1/1
DATE	30/01/07
REF.	
FAMILY	AZ-TH