ITEM	PART NUMBER
A	320-10199
B	14963286
C	14947663 (AH)
D	580-10244 (AD)
E	14963572

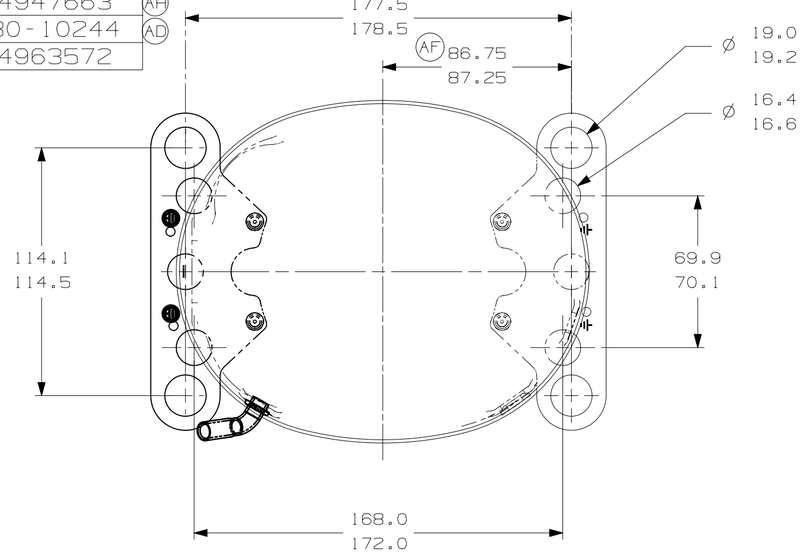

-AUXILIARY VIEW-
FASTENING DIMENSIONS

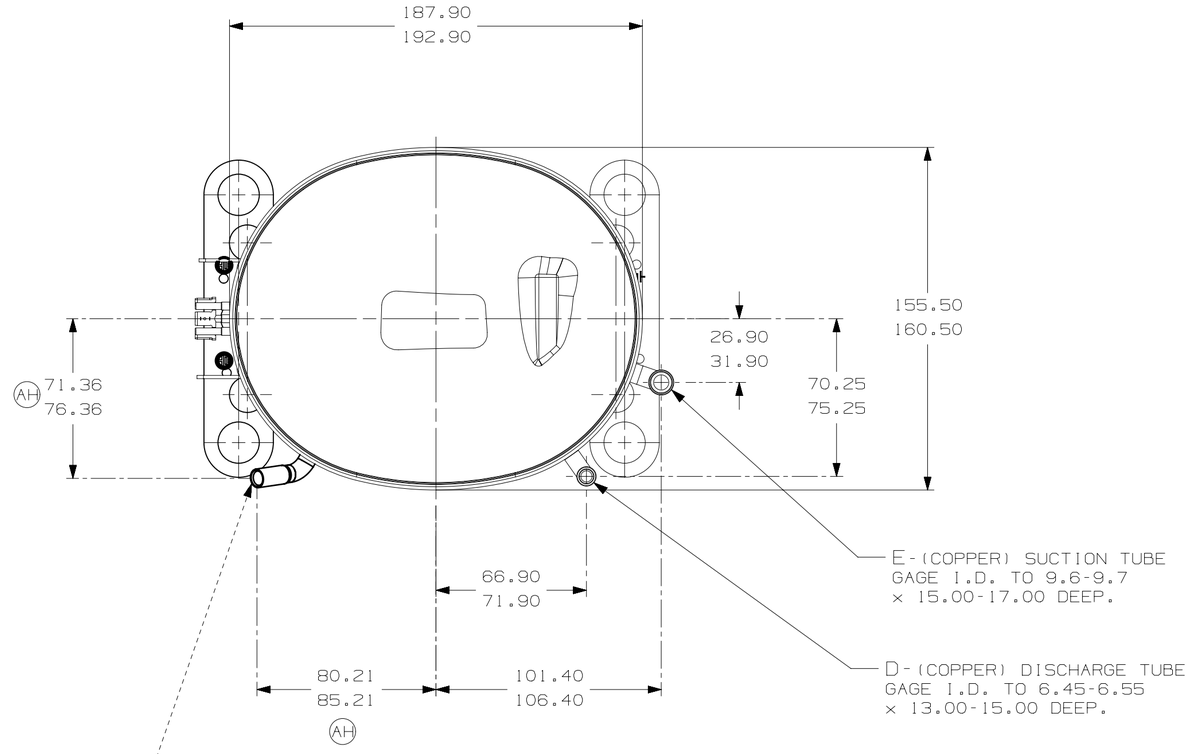

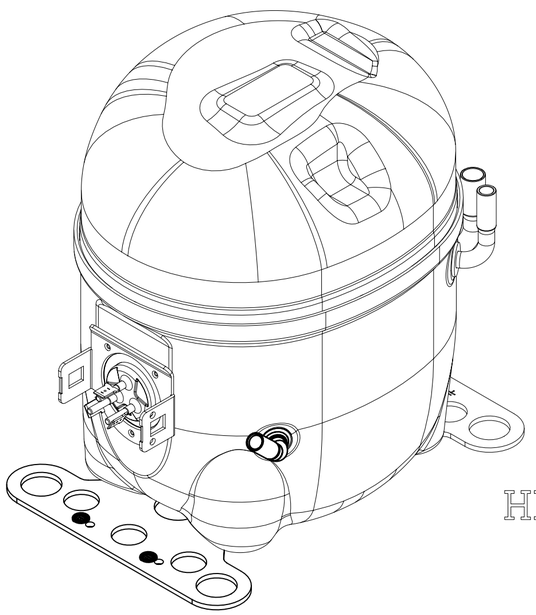

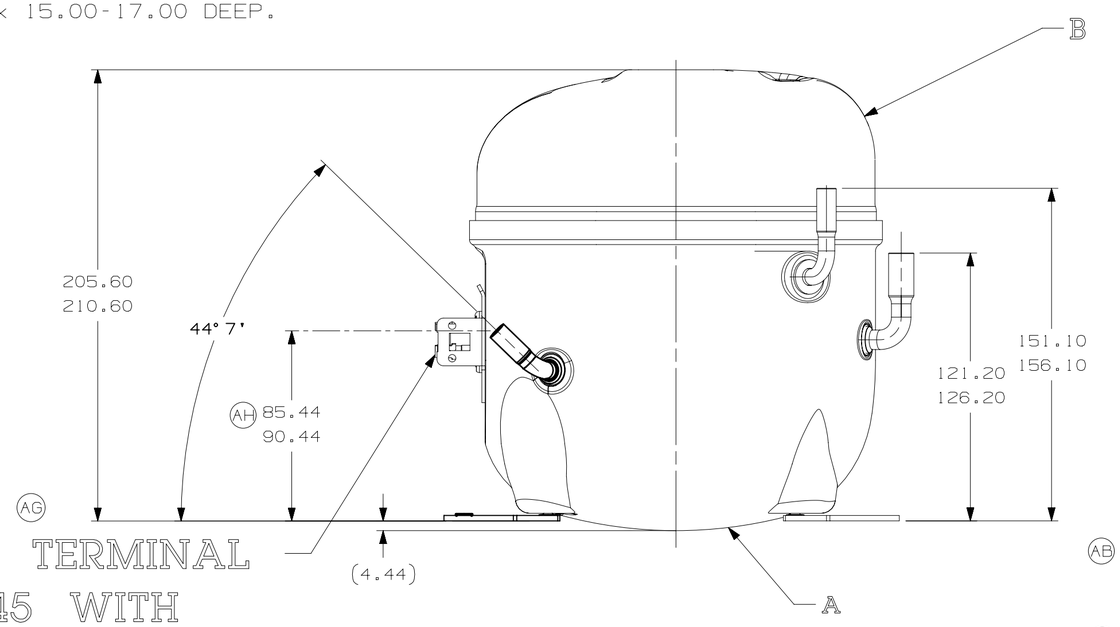

HERMETIC TERMINAL
14945645 WITH
SPADE TERMINALS

NOTES:
1- IF SPECIFIED IN BM. ASSEMBLE PARTS AS SHOWN.
2- SEE SPEC. "A-B" & A-C FOR PROCESS.
3- THERE CAN BE NO CREASES IN THE TUBES. (CREASES ARE SIGNS OR MARKS THAT ARE IN SOMETHING THAT BENDS)
(AB) 4- AFTER THE FOLDS IN THE TUBES, CANNOT BE ACCELERATED TO AREA EXCEEDING 30%.
5- TUBES OF SUCTION, DISCHARGE AND PROCESS MUST BE FREE OF INK ON 15.8mm (5/8") FROM TOP OF THE TUBES AS SPEC. T.P.Co. A-B4.
(AC)
(AF) 6- FOR SUPPLIER ENVIRONMENTAL REGULATORY REQUIREMENTS, SEE TECUMSEH GLOBAL SPEC. 08.

LT	LC	CHANGE	DATE
B5	ERA 91.60-96.60		EC102387 03-05-22 GM. RG.
D4	ERA 86.60-91.60		
E5	ERA 72.10-77.10		
F8	ERA 14963573		
B/6 (AG)		ATUALIZADA NOTA DE AVISO	EC96671 13-08-20 CADEM CS
A/2 F/7 (AF)		ALTERADA MEDIDA ERA: 88.75-89.25 E ACRESC. NOTA 6	EC80775 14-02-18 PS. RG.
-- (AE)		RETIRADO DETALHE (AREA ISENTA DE PINTURA)	EC70369 06-06-16 AMP. WC.
F/7 (AD)		ALTERADO TUBO D ERA: 14963519	EC59687 03-03-15 PS. RG.
A/2 (AC)		ADICIONADO NOTA	EC52840 AMP MF 13-09-13
A/2 (AB)		REVISADA NOTAS 3 E 4	EC44035 08/06/12 PS. A.M
	A/2 (AB)	ACRESCENTADA NOTAS 3 E 4	
-- (AA)		LIBERACAO	EC44132 28/02/12 PS. A.M

THIS DRAWING OR PRINT (I) IS THE PROPERTY OF TECUMSEH DO BRASIL LTDA. AND CONTAINS PROPRIETARY AND CONFIDENTIAL INFORMATION BELONGING TO TECUMSEH DO BRASIL, (II) IS MADE AVAILABLE TO THE RECIPIENT ON THE EXPRESS AND SPECIFIC CONDITION THAT NEITHER IT NOR THE INFORMATION CONTAINED THEREON OR DISCLOSED OR MADE AVAILABLE TO OTHERS WITHOUT THE EXPRESS AND SPECIFIC WRITTEN CONSENT OF TECUMSEH DO BRASIL AND THAT SUCH INFORMATION ONLY AS EXPRESSLY AND SPECIFICALLY APPROVED IN WRITING BY TECUMSEH DO BRASIL AND NOT OTHERWISE, (III) SHALL NOT BE COPIED OR TO ANY EXTENT WITHOUT TECUMSEH DO BRASIL PRIOR EXPRESS AND SPECIFIC WRITTEN CONSENT AND (IV) SHALL BE RETURNED TO TECUMSEH DO BRASIL PROMPTLY AFTER SUCH REQUEST IS MADE.

DO NOT SCALE THIS DRAWING. ALL FERROUS MATERIALS MUST NOT BE MAGNETIZED AS RECEIVED OR AT COMPRESSOR ASSEMBLY

THIRD ANGLE PROJECTION
UNITS: mm
DRAWING SIZE: A2

Q. A.SYMBOLS AS PROCEDURE 2.01.031 TECUMSEH OF BRAZIL
: CATEGORY I
: CATEGORY II
: CATEGORY III
: CATEGORY IV

Tecumseh

NAME	PART NO.
SALES COMPRESSOR	DCAE678
	SCALE 1:2 · PAGE 1/1
DATE 20/02/12 · REF.	FAMILY AE2