DUCASSE INDUSTRIAL

LINEA SEGMENTA

INTERIOR DOOR SOLUTIONS
BARN DOOR SERIES: KITS



Single-door
BARN DOOR KIT



Bi-folding
BARN DOOR KIT



Double-door
BYPASS BARN DOOR KIT

DUCASSE INDUSTRIAL

BARN DOOR KIT

INTERIOR DOOR SOLUTIONS

Nº OF DOORS	TOP MOUNT	ROLLER MOUNT	MOVEMENT	LOAD CAPACITY BY PANEL	DOOR WIDTH	DOOR THICKNESS	DOOR MATERIAL
1	OVERLAPPED	HANGER	LINEAR	40-176 Lbs.	max 39" min 20"	1.3"-1.7"	WOOD

v01_1025

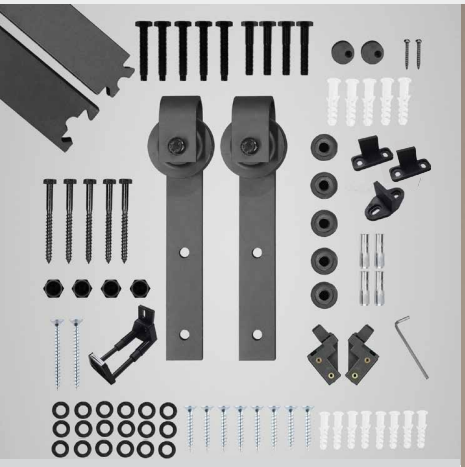





Sliding mechanism for wooden interior doors.
44-176 lbs load capacity by panel. 6.5 ft track

Easy to install.

APPLICATION

| Interior doors

FEATURES

| Sliding mechanism for different types of doors, from MDF to knotty and unfinished pine wood doors, etc.

| Anti-jump pads fixed to top door edge.

| Adjustable stops suitable for 6.5ft tracks

| Three fixed floor guide options.

| Kit contains all the components necessary to install 1 door.

| Matching accessories*: BARN DOOR EASY-SOFT SET + 1 BARN DOOR, 3.2ft BARN DOOR TRACK SET, ROUND OR SQUARE BARN DOOR HANDLE.

**Sold separately.*

LINEA SEGMENTA

DUCASSE INDUSTRIAL

INTERIOR DOOR SOLUTIONS

96 HOURS
UNE-EN 1670 CORROSION RESISTANCE

UNE-EN 1527 G°6 100.000 CYCLES
DURABILITY TESTED

EASY-SOFT MECHANISM (OPTIONAL)

v01_1025

Installation:

General Layout

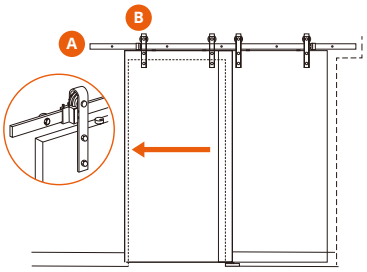

Side View

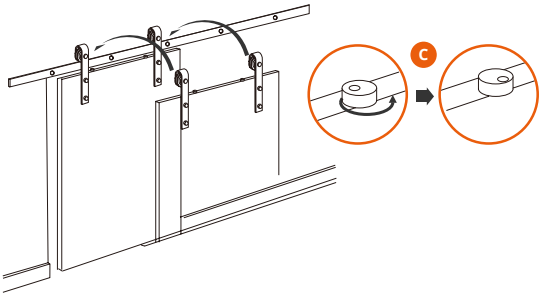

Bolts Distribution

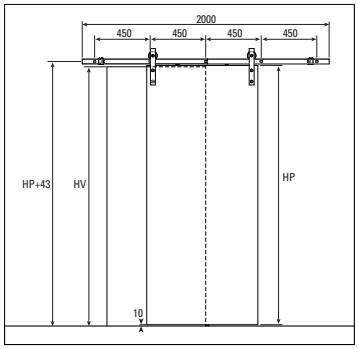

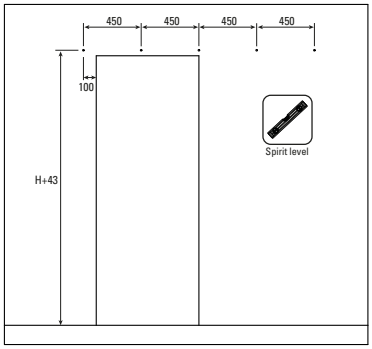

HP: Door Height
HV: Opening Height
AP: Door Width
AV: Opening Width

HP ≥ HV

AP = AV + 100

GENERAL INSTALLATION MEASUREMENTS - ACCESSORIES*

*Sold separately.

Barn door handle

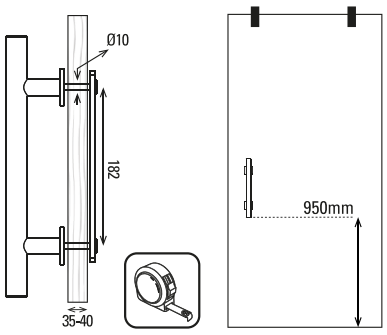

Easy Soft

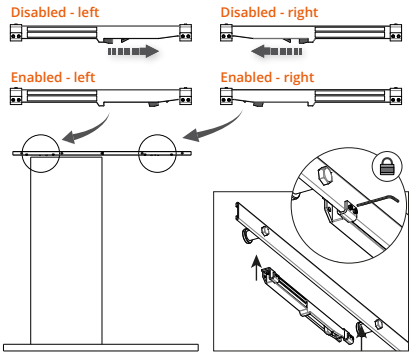

Measurements in mm provided for reference only. See assembling manual for proper installation.
Products tested at Ducasse labs under international standards.

Configurations:

Barn Door Kit



Barn Door Kit + 3.2ft Barn Door Track Set



Barn Door Kit + Set + 1 Barn Door



Barn Door Kit + Barn Door Track Set + Set + 1 Barn Door



BARN DOOR KIT (SINGLE DOOR)

Minimum delivery: 01 unit.
4010900010

CONTENTS:

- A — x2 Hanger / roller
- B — x2 3.2ft C-type joint track
- C — x2 Anti-jump pad
- D — x2 Roller stop
- E — x2 Floor guide
- F — x1 Floor T guide
- G — x1 Adjustable floor guide
- H — x5 Spacer
- I — x1 Hex wrench
- J — x5 Concrete bolts
- L — x5 Hex bolt set
- M — Screws / dowels

BARN DOOR ACCESSORIES

*Sold separately.



SET + 1 BARN DOOR
Código: 4010900022
- 2 rollers/hanger to install one door.
- Track not included.



BARN DOOR + 3.2ft TRACK SET
Código: 4010900020
- Matching 3.2ft C-type joint track to extend interior BARN DOOR KIT panels
- Rollers not included.



BARN DOOR EASY SOFT
Código: 4010073088
- Easy soft opening & closing mechanism for BARN DOOR KIT
- Contains 2 units.



BARN DOOR ROUND HANDLE
Código: 4010082180
- Round-profile pull handle for wooden or iron-wood doors.
- No door modification required.



BARN DOOR SQUARE HANDLE
Código: 4010082182
- Square-profile pull handle for wooden or iron-wood doors.
- No door modification required.

DUCASSE INDUSTRIAL

BI-FOLDING BARN DOOR KIT

INTERIOR DOOR SOLUTIONS

N° OF DOORS	TOP MOUNT	ROLLER MOUNT	MOVEMENT	LOAD CAPACITY BY PANEL	DOOR WIDTH	DOOR THICKNESS	DOOR MATERIAL
2	OVERLAPPED	HANGER	BIFOLD	33-110 Lbs.	≤ 24"	1.3" - 1.5"	WOOD

v01_1025







Fine black texture powder coating

Sliding mechanism for wooden interior doors.
Panel weight: 33-110 lbs.
4.9 ft track

Easy to install.

APPLICATION

| Interior doors

FEATURES

| Sliding mechanism for different types of doors, from MDF to knotty and unfinished pine wood doors, etc.

|Anti-jump pads fixed to top door edge.

| Adjustable stops suitable for 4.9ft tracks

| Kit contains all the components necessary to assemble 2 doors.

LINEA SEGMENTA

DUCASSE INDUSTRIAL

BI-FOLDING BARN DOOR KIT

INTERIOR DOOR SOLUTIONS

96 HOURS

UNE-EN 1670 CORROSION RESISTANCE

UNE-EN 1527 G°1 25.000 CYCLES

DURABILITY TESTING

v01_1025

Installation:

Full view

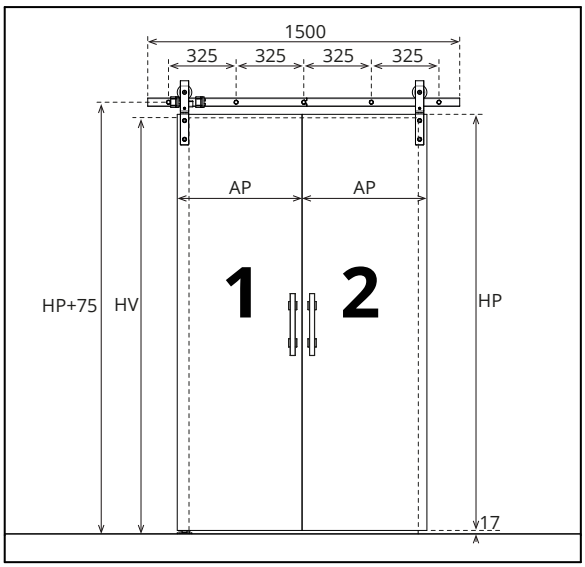

HP: Altura Puerta / Altura da porta / Door Height
HV: Altura Vano / Altura do vão / Opening Height
AP: Ancho Puerta / Largura da porta / Door Width
AV: Ancho Vano / Largura do vão / Opening Width

HP ≥ HV

AP = AV/2 + 50

Installation:

Mounting

Closing

Opening

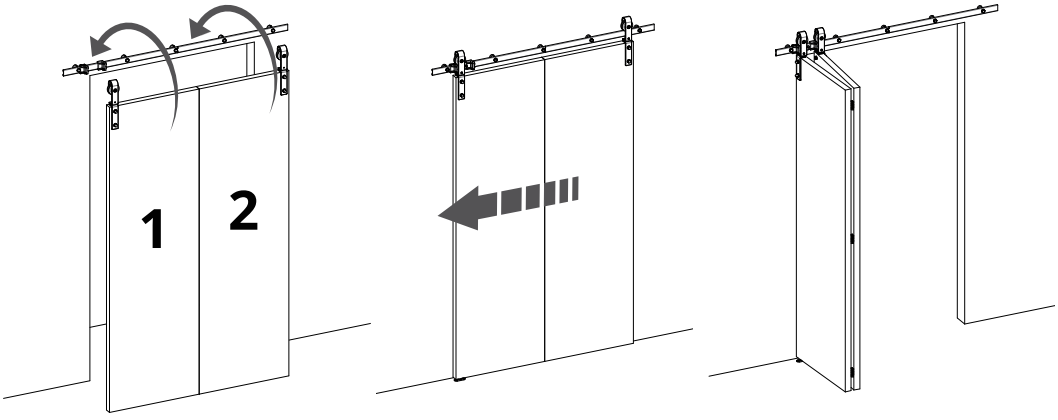

Measurements in mm provided for reference only. See assembling manual for proper installation.
Products tested at Ducasse labs under international standards.

Configurations:

Bi-fold Barn Door Kit:

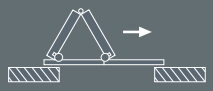

Bi-fold Barn Door Kit + Bi-fold Barn Door Kit:



BIFOLD SLIDING DOOR KIT
(DOUBLE DOOR)

Minimum delivery: 01 unit
4010900012

CONTENTS:

A	**x2** Rotating hanger / roller	
B	**x2** 2.4ft C-type joint track	
C	**x2** Bottom pivot	
D	**x1** C guide	
E	**x3** Hinge	
F	**x2** Roller stop	
G	Concrete bolt set	
H	Hex bolt set	
I	**x5** Spacer	
J	**x1** Fixator	
K	Screws / Dowels	

ACCESSORIES
BARN DOOR KIT
*Sold separately



ROUND BARN DOOR HANDLE
Código: 4010082180
- Round-profile pull handle for wooden or iron-wood doors.
- No door modification required.



SQUARE BARN DOOR HANDLE
Código: 4010082182
- Square-profile pull handle for wooden or iron-wood doors.
- No door modification required.

DUCASSE INDUSTRIAL

BYPASS BARN DOOR KIT

INTERIOR DOOR SOLUTIONS

N° OF DOORS	TOP MOUNT	ROLLER MOUNT	MOVEMENT	LOAD CAPACITY BY PANEL	TELESCOPIC DOOR WIDTH	STANDARD DOOR WIDTH	DOOR THICKNESS
2	OVERLAPPED	HANGING	LINEAR	33-110 Lbs.	20"-39"	19.6"-55.11"	1.37"

v01_1025







Sliding mechanism for wooden interior doors.
Maximum panel weight: 110 lbs.
6.5ft track

APPLICATION

| Interior doors

FEATURES

| Sliding mechanism for different types of wood doors, from MDF to knotty and unfinished pine wood doors, etc.

|Anti-jump pads fixed to the top edge.

| Adjustable stops suitable for 6.5ft tracks.

| Three fixed floor guide options.

| Kit includes all the components necessary to assemble two doors.

LINEA SEGMENTA

DUCASSE INDUSTRIAL

BYPASS BARN DOOR KIT

INTERIOR DOOR SOLUTIONS

WOOD
DOOR MATERIAL

96 HOURS
UNE-EN 1670 CORROSION RESISTANCE

v01_1025

Installation: General layout

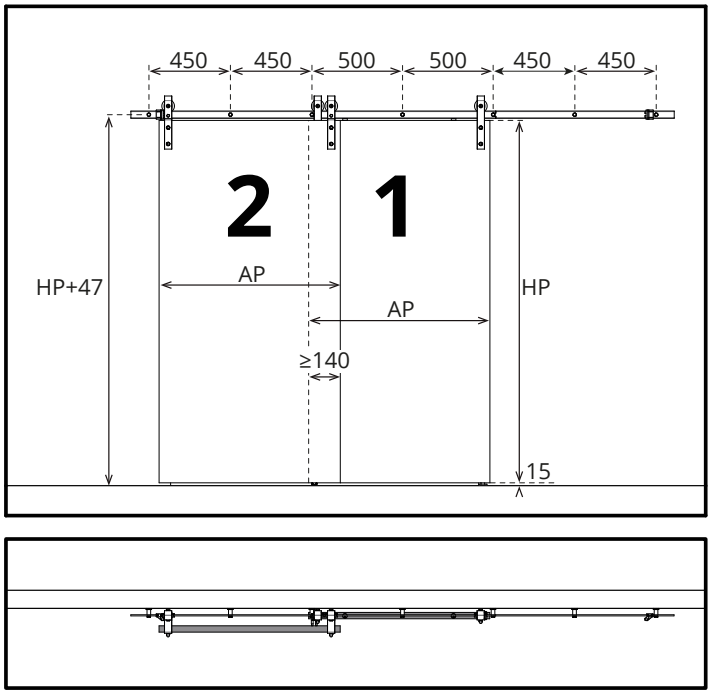

HP: Altura Puerta / Altura da porta / Door Height
HV: Altura Vano / Altura do vão / Opening Height
AP: Ancho Puerta / Largura da porta / Door Width
AV: Ancho Vano / Largura do vão / Opening Width

HP ≥ HV

AP = AV/2 + 150

CONFIGURATION
Telescopic Bypass

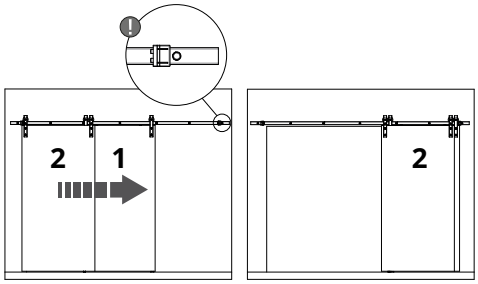

CONFIGURATION
Standard Bypass

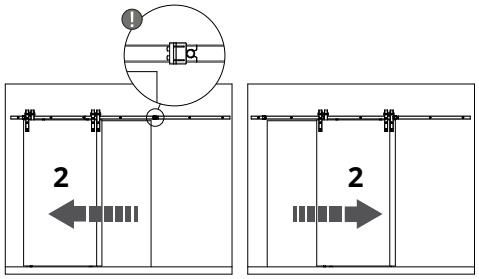

Measurements in mm provided for reference only. See assembling manual for proper installation.
Products tested at Ducasse labs under international standards.

Configurations:

Standard Bypass Barn Door Kit:



Telescopic Bypass Barn Door Kit:

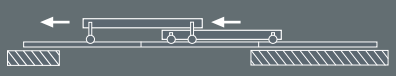

BYPASS BARN DOOR KIT
(DOUBLE DOOR)

Minimum delivery: 01 unit.
4010900014

CONTENTS:

A	**x2** Extended hanger/roller	
B	**x2** Hanger/roller	
C	**x1** 3.2ft Type A, Type B, Type C joint track	
D	**x2** Anti-jump pad	
E	**x2** Floor T guide	
F	**x4** Floor guide	
G	**x1** Floor guide	
H	**x2** Door stopper	
I	Concrete bolt set	
J	Hex bolt set	
K	**x7** x7 Spacer	
L	Screws / dowels	

BARN DOOR KIT ACESSORIES

*Sold separately.



ROUND BARN DOOR HANDLE
Código: 4010082180
- Round-profile pull handle for wooden or iron-wood doors.
- No door modification required



SQUARE BARN DOOR HANDLE
Código: 4010082182
- Square-profile pull handle for wooden or iron-wood doors.
- No door modification required



N° OF DOORS | MOVEMENT | LOAD CAPACITY BY PANEL | DOOR WIDTH | DOOR THICKNESS | DOOR MATERIAL

v01_1025





BARN DOOR EASY SOFT
(SINGLE DOOR)

Minimum delivery: 01 unit.
4010073088

CONTENTS:

A	**x2** Easy soft mechanism	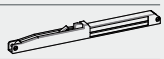
B	**x2** Actuators	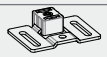
C	**x4** Bracket	
D	**x4** Screws	
E	**x6** #4x1".	
F	**x1** Hex wrench.	
G	**x1** Hex wrench.	

FEATURES

| Easy-soft opening and closing mechanism for BARN DOOR KIT panels.

| Contains 2 units.

Installation: General Layout

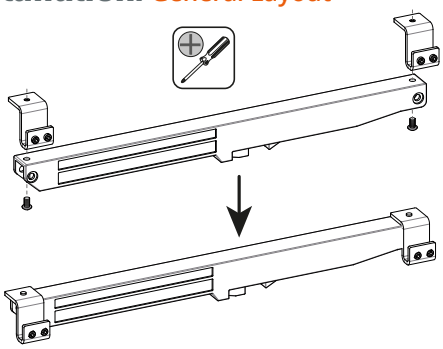

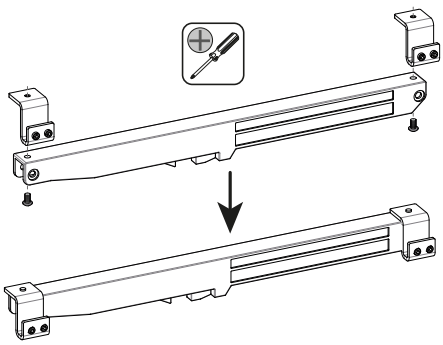

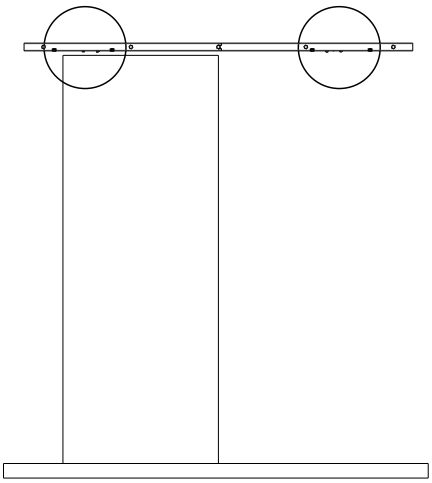

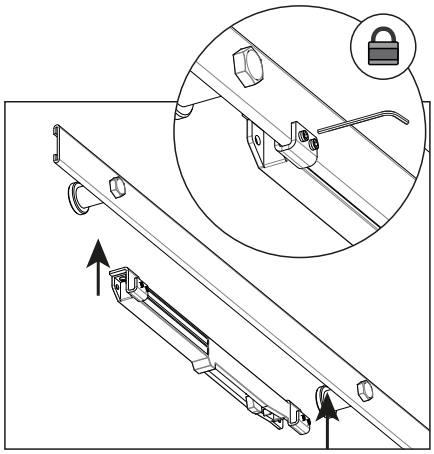

LINEA SEGMENTA



Nº OF DOORS

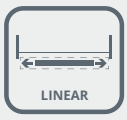

MOVEMENT



LOAD CAPACITY BY PANEL

v01_1025

SET +1 BARN DOOR
(ONE PANEL)

Minimum delivery: 01 unit.
4010900022

CONTENTS:

A	**x2** Hanger/ roller set	
B	**x2** Anti-jump pad	
C	**x1** Floor T guide	
A	**x2** Roller stop	
B	**x2** Floor guide	
C	**x1** Adjustable floor guide	
C	Screws / dowels.	

FEATURES

|2 rollers/hangers to install 1 door.

|Track not included.

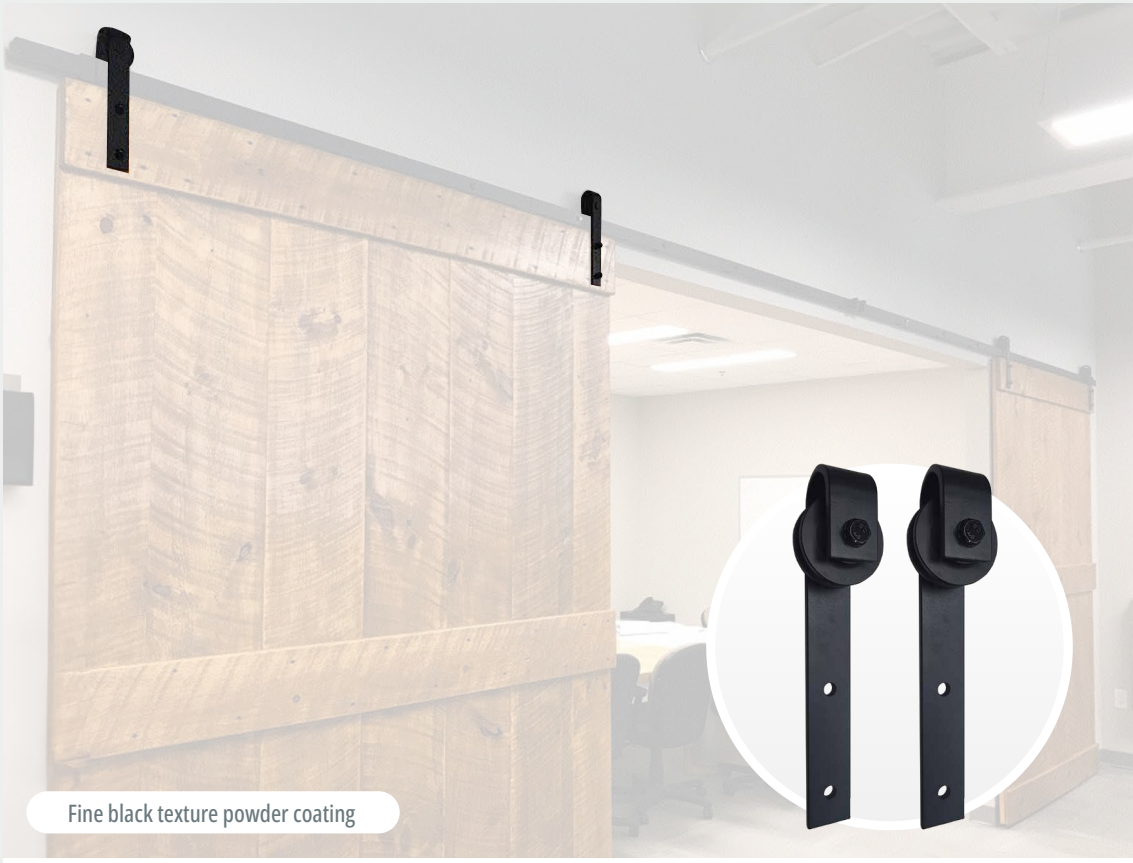

BARN DOOR 3.2 ft TRACK SET
(TRACK ACCESSORY)

Minimum delivery: 01 unit.
4010900020

CONTENTS:

A	**x1** Riel juntas tipo C largo 1m.	
B	**x2** Separador de pared.	
C	**x2** Fijaciones pared concreto.	
D	**x2** Fijaciones pared.	

FEATURES

| Matching 3.3 ft C type joint track to extend INTERIOR BARN DOOR KIT doors.

| Rollers not included.

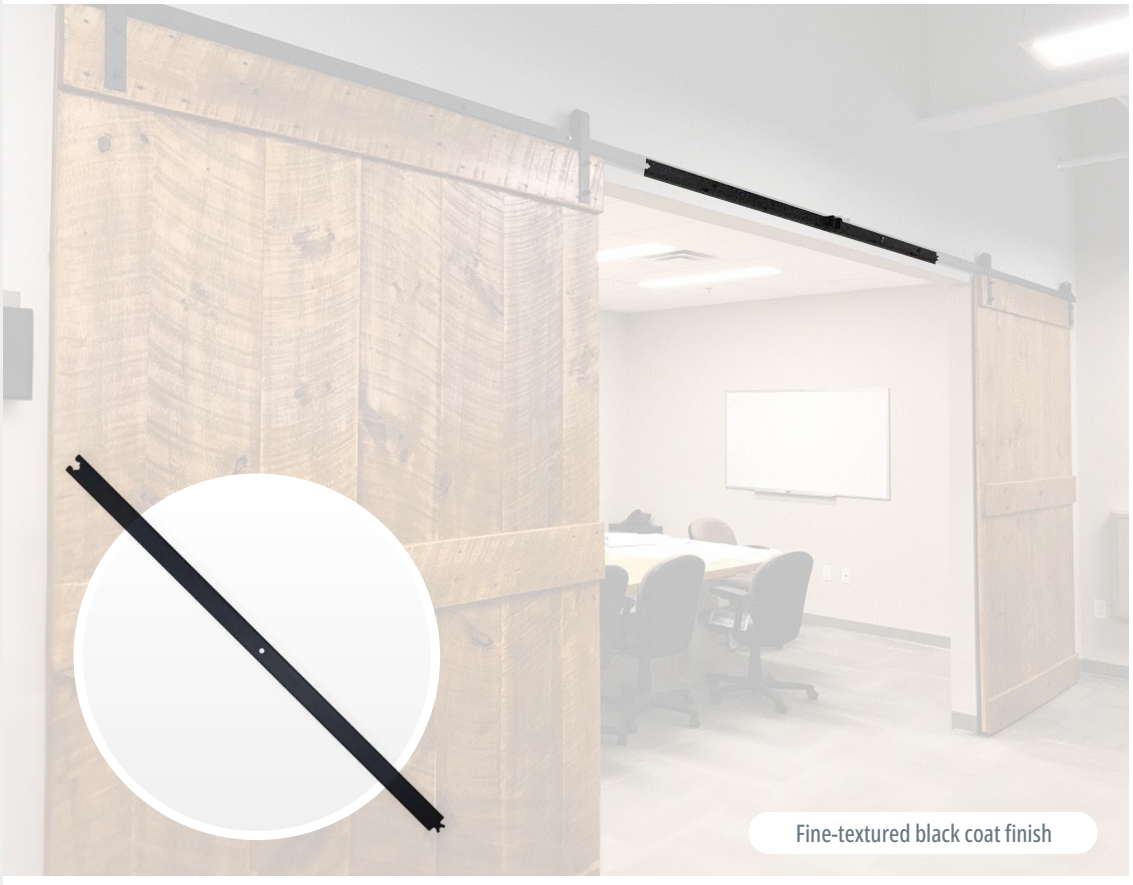

LINEA SEGMENTA



Nº OF DOORS



DOOR THICKNESS



DOOR MATERIAL



UNE-EN 1670 CORROSION RESISTANCE

v01_1025



ROUND BARN DOOR HANDLE
(SINGLE PANEL)

Minimum delivery: 10 units.
4010082180



SQUARE BARN DOOR HANDLE
(SINGLE PANEL)

Minimum delivery: 10 units.
4010082182



Fine black texture powder coating

Pull handle for interior wooden or iron-wood doors.

ALSO CHECK:

Round/square handles designed as a Interior Door accessory. High corrosion resistance. Easy to install. No door modification required

LINEA SEGMENTA

Layout:

Round
BARN DOOR HANDLE

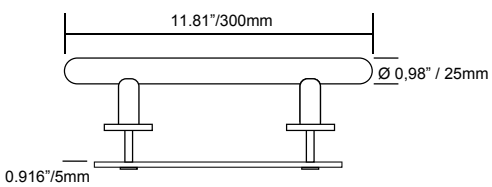

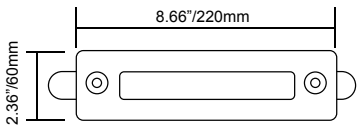

Square
BARN DOOR HANDLE

