International
IOR Rectifier

PD - 96292

IRFP250MPbF

HEXFET® Power MOSFET

- Advanced Process Technology
- Dynamic dv/dt Rating
- 175°C Operating Temperature
- Fast Switching
- Fully Avalanche Rated
- Ease of Paralleling
- Simple Drive Requirements
- Lead-Free

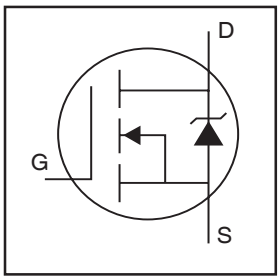

V_{DSS} = 200V

$R_{DS(on)}$ = 0.075Ω

I_D = 30A

Description

Fifth Generation HEXFETs from International Rectifier utilize advanced processing techniques to achieve extremely low on-resistance per silicon area. This benefit, combined with the fast switching speed and ruggedized device design that HEXFET Power MOSFETs are well known for, provides the designer with an extremely efficient and reliable device for use in a wide variety of applications.

The TO-247 package is preferred for commercial-industrial applications where higher power levels preclude the use of TO-220 devices. The TO-247 is similar but superior to the earlier TO-218 package because of its isolated mounting hole.

TO-247AC

Absolute Maximum Ratings

	Parameter	Max.	Units
I_D @ T_C = 25°C	Continuous Drain Current, V_{GS} @ 10V	30	A
I_D @ T_C = 100°C	Continuous Drain Current, V_{GS} @ 10V	21	
I_{DM}	Pulsed Drain Current ①	120	
P_D @T_C = 25°C	Power Dissipation	214	W
	Linear Derating Factor	1.4	W/°C
V_{GS}	Gate-to-Source Voltage	± 20	V
E_{AS}	Single Pulse Avalanche Energy②	315	mJ
I_{AR}	Avalanche Current①	30	A
E_{AR}	Repetitive Avalanche Energy①	21	mJ
dv/dt	Peak Diode Recovery dv/dt ③	8.6	V/ns
T_J T_{STG}	Operating Junction and Storage Temperature Range	-55 to +175	°C
	Soldering Temperature, for 10 seconds	300 (1.6mm from case)	
	Mounting torque, 6-32 or M3 srew	10 lbf•in (1.1N•m)	

Thermal Resistance

	Parameter	Typ.	Max.	Units
$R_{\theta JC}$	Junction-to-Case	——	0.7	°C/W
$R_{\theta CS}$	Case-to-Sink, Flat, Greased Surface	0.24	——	
$R_{\theta JA}$	Junction-to-Ambient	——	40	

03/01/10

Electrical Characteristics @ T_J = 25°C (unless otherwise specified)

	Parameter	Min.	Typ.	Max.	Units	Conditions
$V_{(BR)DSS}$	Drain-to-Source Breakdown Voltage	200	——	——	V	V_{GS} = 0V, I_D = 250μA
$\Delta V_{(BR)DSS}/\Delta T_J$	Breakdown Voltage Temp. Coefficient	——	0.26	——	V/°C	Reference to 25°C, I_D = 1mA
$R_{DS(on)}$	Static Drain-to-Source On-Resistance	——	——	0.075	Ω	V_{GS} = 10V, I_D = 18A ④
$V_{GS(th)}$	Gate Threshold Voltage	2.0	——	4.0	V	V_{DS} = V_{GS}, I_D = 250μA
g_{fs}	Forward Transconductance	17	——	——	S	V_{DS} = 50V, I_D = 18A ④
I_{DSS}	Drain-to-Source Leakage Current	——	——	25	μA	V_{DS} = 200V, V_{GS} = 0V
		——	——	250		V_{DS} = 160V, V_{GS} = 0V, T_J = 150°C
I_{GSS}	Gate-to-Source Forward Leakage	——	——	100	nA	V_{GS} = 20V
	Gate-to-Source Reverse Leakage	——	——	-100		V_{GS} = -20V
Q_g	Total Gate Charge	——	——	123	nC	I_D = 18A
Q_{gs}	Gate-to-Source Charge	——	——	21		V_{DS} = 160V
Q_{gd}	Gate-to-Drain ("Miller") Charge	——	——	57		V_{GS} = 10V, See Fig. 6 and 13 ④
$t_{d(on)}$	Turn-On Delay Time	——	14	——	ns	V_{DD} = 100V
t_r	Rise Time	——	43	——		I_D = 18A
$t_{d(off)}$	Turn-Off Delay Time	——	41	——		R_G = 3.9Ω
t_f	Fall Time	——	33	——		R_D = 5.5Ω, See Fig. 10 ④
L_D	Internal Drain Inductance	——	4.5	——	nH	Between lead, 6mm (0.25in.) from package and center of die contact 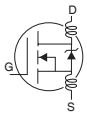
L_S	Internal Source Inductance	——	7.5	——		
C_{iss}	Input Capacitance	——	2159	——	pF	V_{GS} = 0V
C_{oss}	Output Capacitance	——	315	——		V_{DS} = 25V
C_{rss}	Reverse Transfer Capacitance	——	83	——		f = 1.0MHz, See Fig. 5

Source-Drain Ratings and Characteristics

	Parameter	Min.	Typ.	Max.	Units	Conditions
I_S	Continuous Source Current (Body Diode)	——	——	30	A	MOSFET symbol showing the integral reverse p-n junction diode. 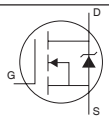
I_{SM}	Pulsed Source Current (Body Diode)①	——	——	120		
V_{SD}	Diode Forward Voltage	——	——	1.3	V	T_J = 25°C, I_S = 18A, V_{GS} = 0V ④
t_{rr}	Reverse Recovery Time	——	186	279	ns	T_J = 25°C, I_F = 18A
Q_{rr}	Reverse Recovery Charge	——	1.3	2.0	μC	di/dt = 100A/μs ④
t_{on}	Forward Turn-On Time	Intrinsic turn-on time is negligible (turn-on is dominated by L_S+L_D)				

Notes:

① Repetitive rating; pulse width limited by max. junction temperature. (See Fig. 11)

② Starting T_J = 25°C, L = 1.9mH R_G = 25Ω, I_{AS} = 18A. (See Figure 12)

③ $I_{SD} \leq$ 18A, di/dt $\leq$ 374A/μs, $V_{DD} \leq V_{(BR)DSS}$, $T_J \leq$ 175°C

④ Pulse width $\leq$ 300μs; duty cycle $\leq$ 2%.

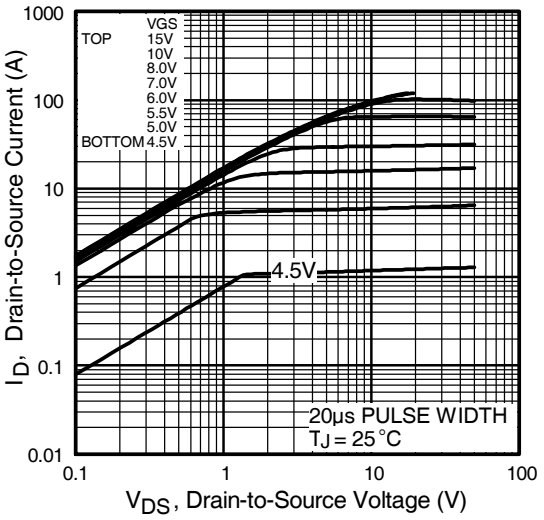

Fig 1. Typical Output Characteristics

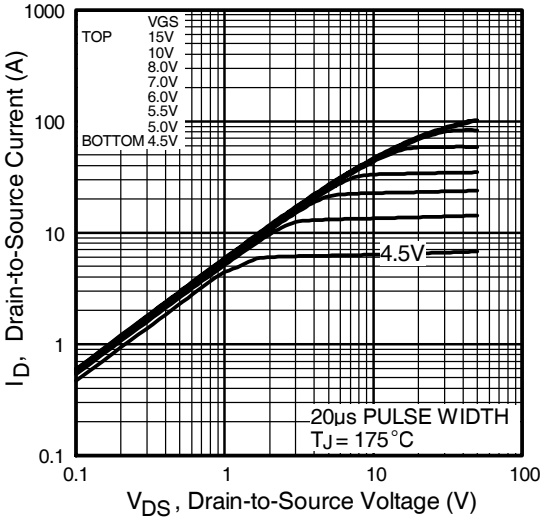

Fig 2. Typical Output Characteristics

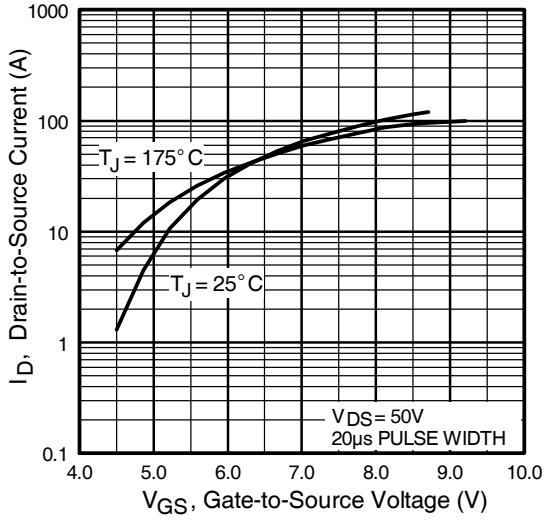

Fig 3. Typical Transfer Characteristics

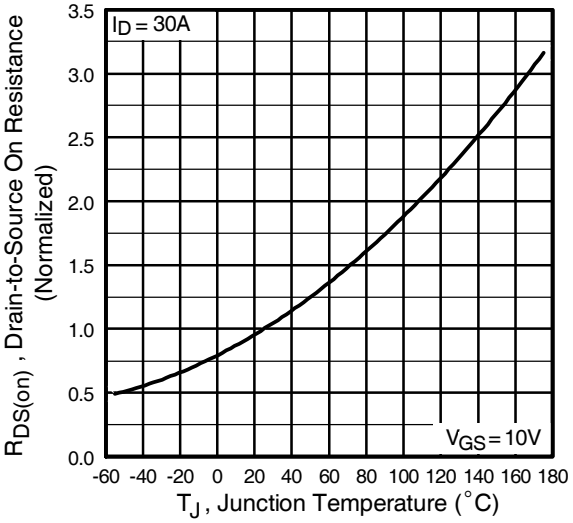

Fig 4. Normalized On-Resistance Vs. Temperature

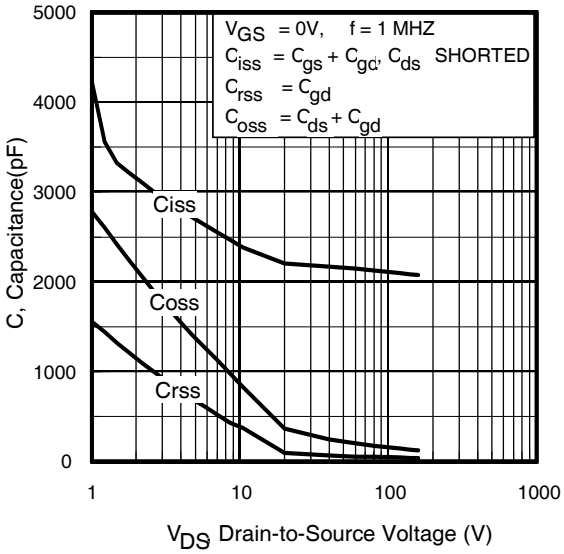

Fig 5. Typical Capacitance Vs. Drain-to-Source Voltage

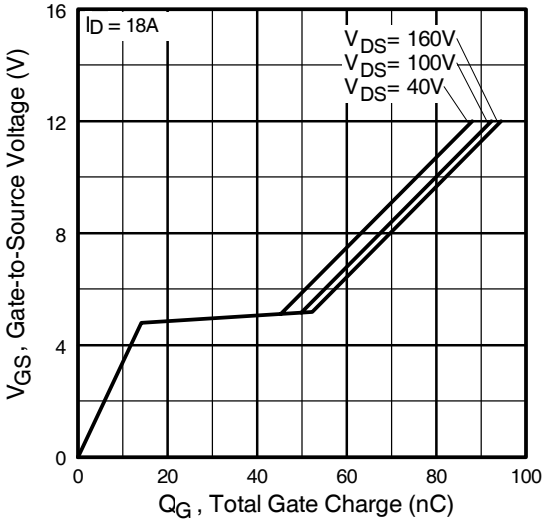

Fig 6. Typical Gate Charge Vs. Gate-to-Source Voltage

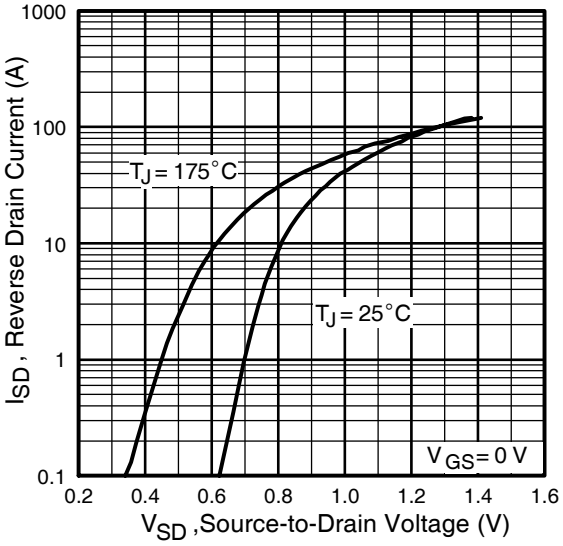

Fig 7. Typical Source-Drain Diode Forward Voltage

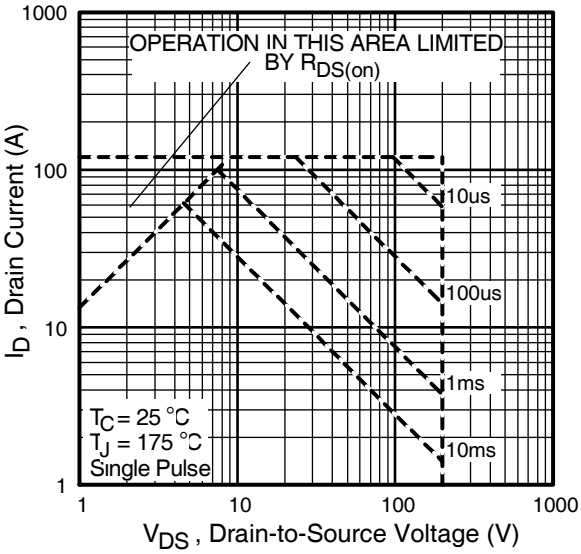

Fig 8. Maximum Safe Operating Area

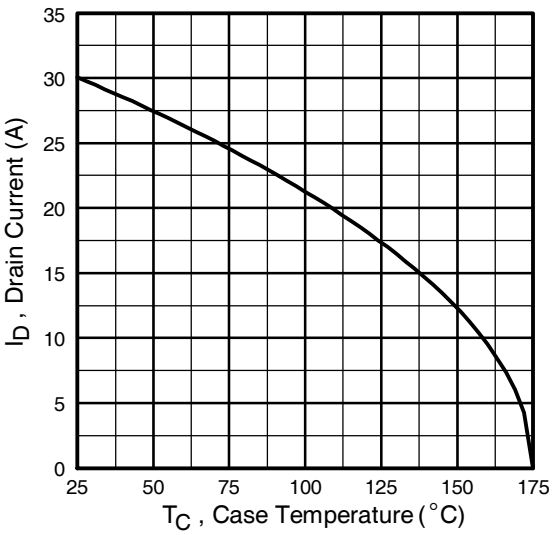

Fig 9. Maximum Drain Current Vs. Case Temperature

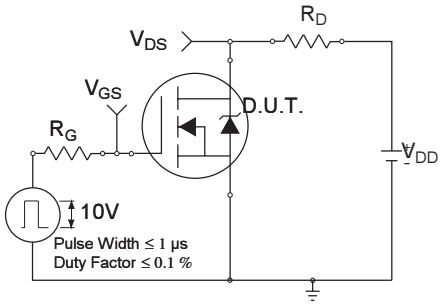

Fig 10a. Switching Time Test Circuit

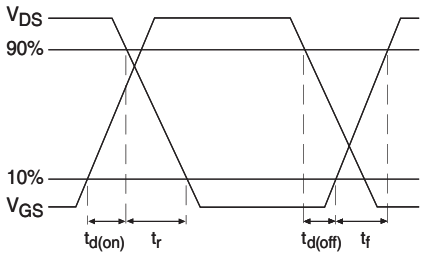

Fig 10b. Switching Time Waveforms

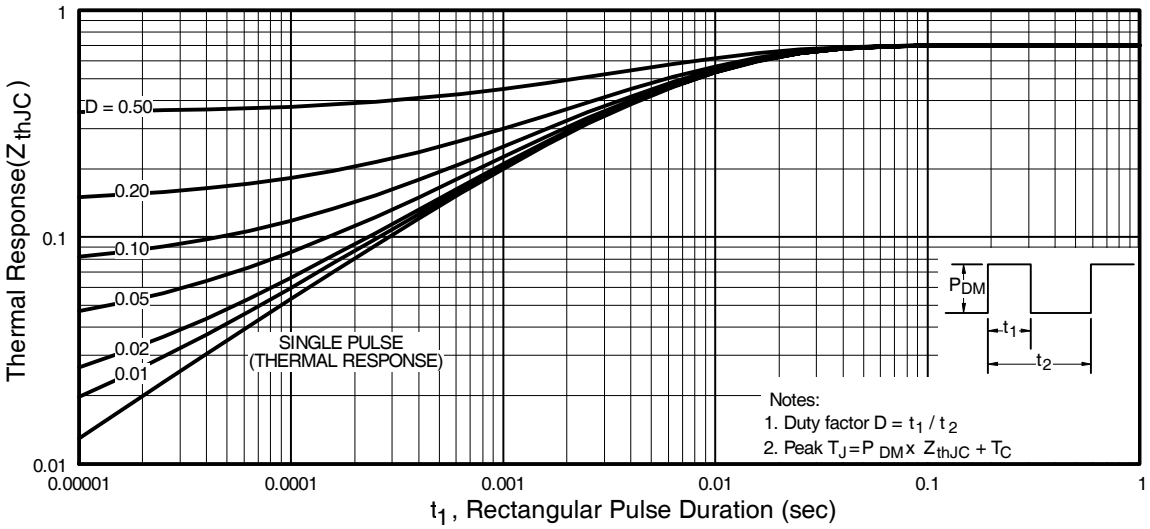

Fig 11. Maximum Effective Transient Thermal Impedance, Junction-to-Case

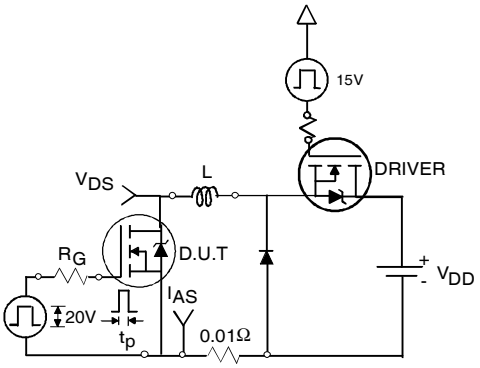

Fig 12a. Unclamped Inductive Test Circuit

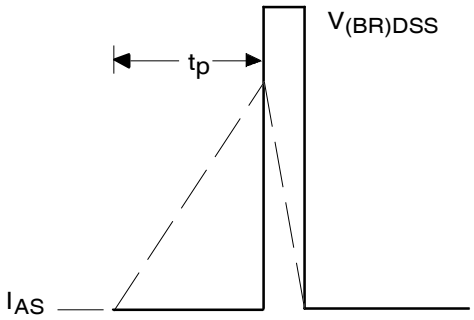

Fig 12b. Unclamped Inductive Waveforms

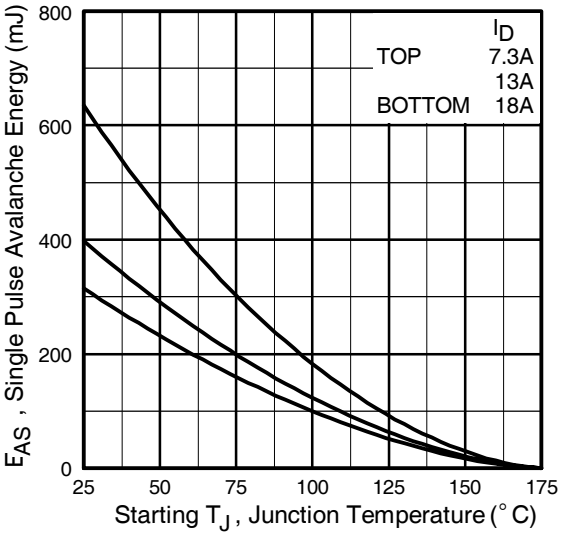

Fig 12c. Maximum Avalanche Energy Vs. Drain Current

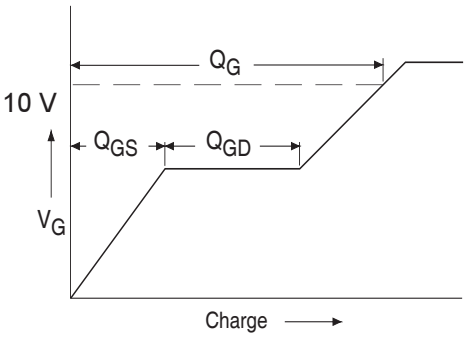

Fig 13a. Basic Gate Charge Waveform

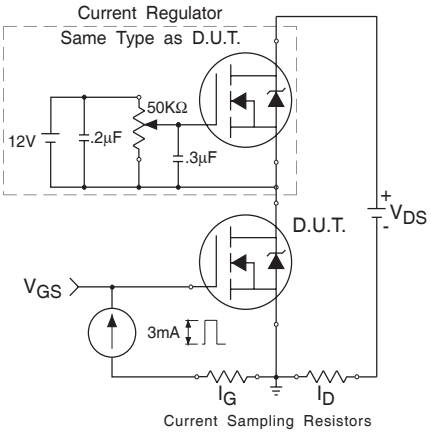

Fig 13b. Gate Charge Test Circuit

Peak Diode Recovery dv/dt Test Circuit

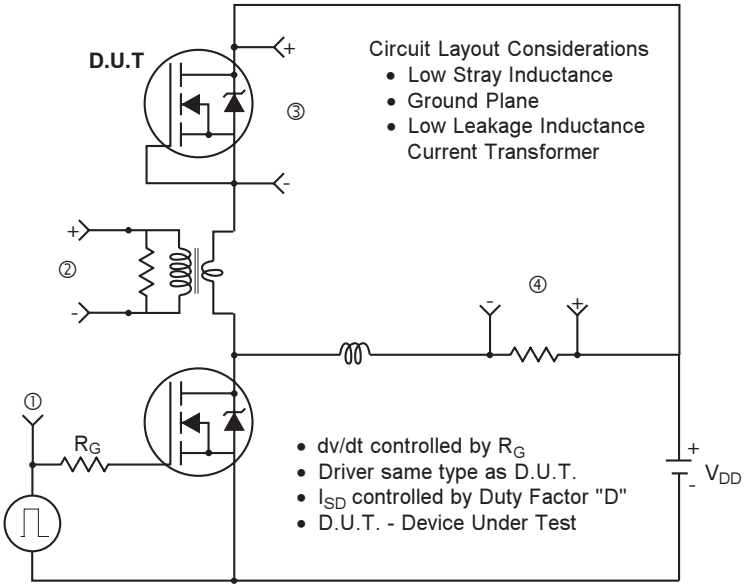

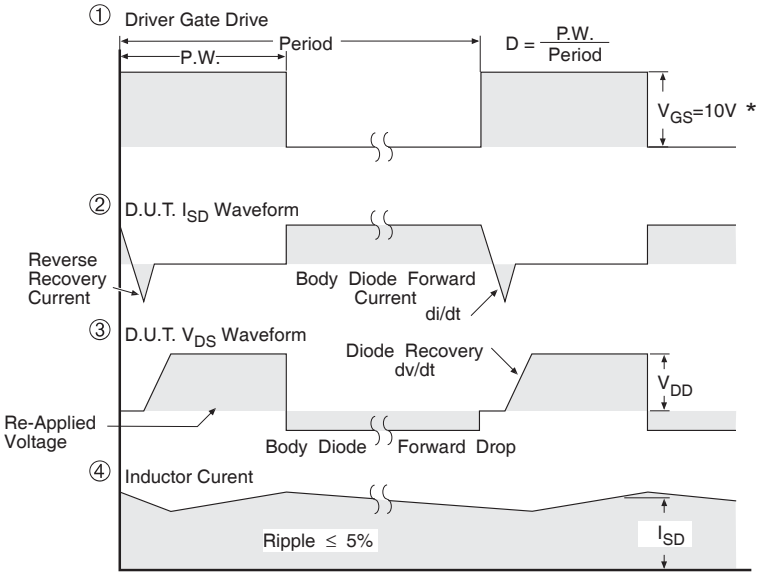

* V_{GS} = 5V for Logic Level Devices

Fig 14. For N-Channel HEXFETS

TO-247AC Package Outline (Dimensions are shown in millimeters (inches))

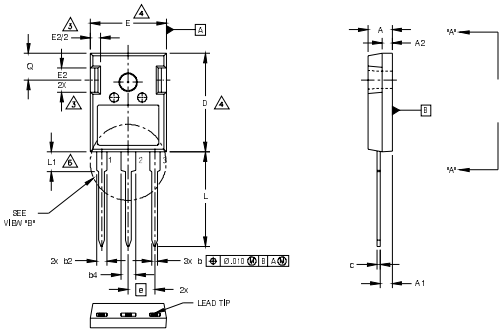

SYMBOL	DIMENSIONS				NOTES
	INCHES		MILLIMETERS		
	MIN.	MAX.	MIN.	MAX.	
A	.190	.204	4.83	5.20	
A1	.090	.100	2.29	2.54	
A2	.075	.085	1.91	2.16	
b	.042	.052	1.07	1.33	
b2	.075	.094	1.91	2.41	
b4	.113	.133	2.87	3.38	
c	.022	.026	0.55	0.68	
D	.819	.830	20.80	21.10	4
D1	.640	694	16.25	17.65	5
E	.620	.635	15.75	16.13	4
E1	.512	.570	13.00	14.50	
E2	.145	.196	3.68	5.00	
e	.215 Typical		5.45 Typical		
L	.780	.800	19.80	20.32	
L1	.161	.173	4.10	4.40	
ø P	.138	.143	3.51	3.65	
Q	.216	.236	5.49	6.00	
S	.238	.248	6.04	6.30	

LEAD ASSIGNMENTS

HEXFET

1.– GATE
2.– DRAIN
3.– SOURCE
4.– DRAIN

IGBTs, CoPACK

1.– GATE
2.– COLLECTOR
3.– EMITTER
4.– COLLECTOR

DIODES

1.– ANODE/OPEN
2.– CATHODE
3.– ANODE

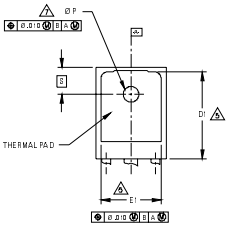

VIEW: "A" - "A"

VIEW: "B"

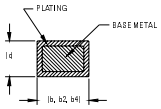

SECTION: C-C, D-D, E-E

NOTES:

1 DIMENSIONING AND TOLERANCING AS PER ASME Y14.5M 1994.

2 DIMENSIONS ARE SHOWN IN INCHES AND MILLIMETERS.

3 CONTOUR OF SLOT OPTIONAL.

4 DIMENSION D & E DO NOT INCLUDE MOLD FLASH. MOLD FLASH SHALL NOT EXCEED .005" (0.127) PER SIDE. THESE DIMENSIONS ARE MEASURED AT THE OUTERMOST EXTREMES OF THE PLASTIC BODY.

5 THERMAL PAD CONTOUR OPTIONAL WITHIN DIMENSIONS D1 & E1.

6 LEAD FINISH UNCONTROLLED IN L1.

7 ø P TO HAVE A MAXIMUM DRAFT ANGLE OF 1.5 ° TO THE TOP OF THE PART WITH A MAXIMUM HOLE DIAMETER OF .154 INCH.

TO-247AC Part Marking Information

EXAMPLE: THIS IS AN IRFPE30
WITH ASSEMBLY
LOT CODE 5657
ASSEMBLED ON WW 35, 2001
IN THE ASSEMBLY LINE "H"

Note: "P" in assembly line position indicates "Lead-Free"

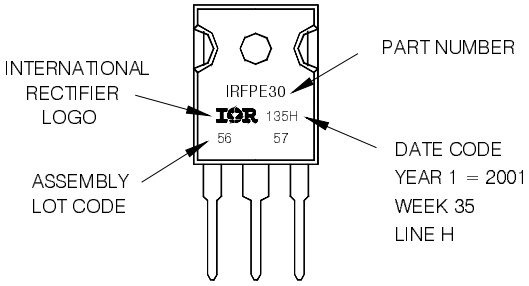

Data and specifications subject to change without notice.

International
IOR Rectifier

IR WORLD HEADQUARTERS: 233 Kansas St., El Segundo, California 90245, USA Tel: (310) 252-7105
TAC Fax: (310) 252-7903
Visit us at www.irf.com for sales contact information.03/2010

Mouser Electronics

Authorized Distributor

Click to View Pricing, Inventory, Delivery & Lifecycle Information:

International Rectifier:

IRFP250MPBF