TEKNİK VERİLER | TECHNICAL DATA

4 DELİKLİ ISO ÇİFT ÇIKIŞLI PİSTONLU POMPA | 4 HOLES ISO TWIN FLOW PISTON PUMP

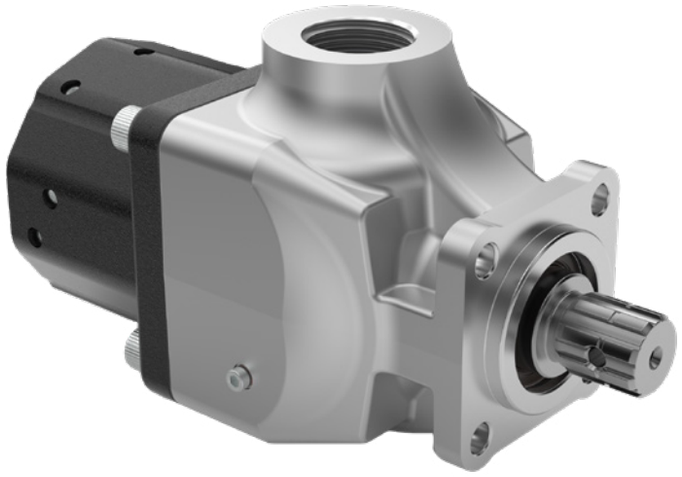

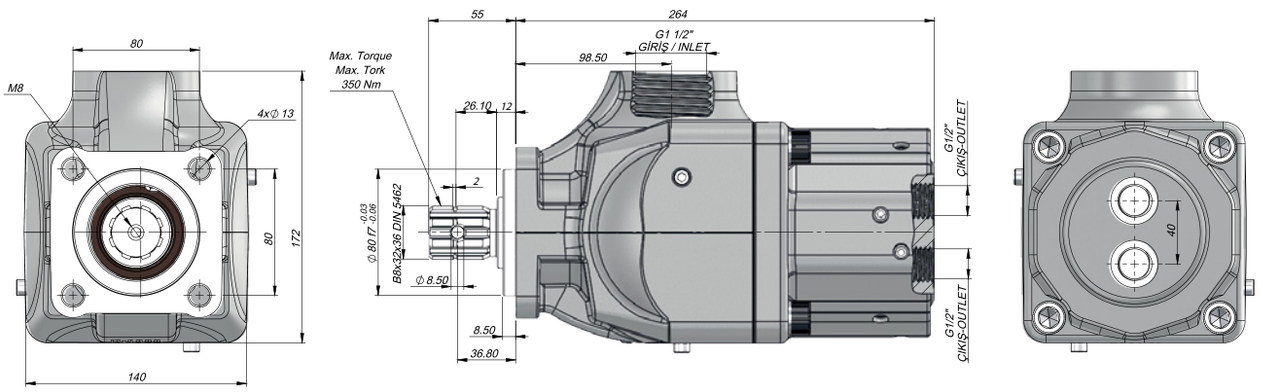

Kod Code	İletim Hacmi Displacement	Maks.Sürekli Basınç Max.Continuous Pressure	Min. Hız Min.Speed	Maks.Sürekli Hız Max.Continuous Speed
	(cm^3/rev)	(100%)(BAR)	(RPM)	(RPM)
P103535SF131	35+35	300	300	1500
P105027SF131	50+27			
P104545SF131	45+45			
P105050SF131	50+50			
P107033SF131	70+33			

ТОВ "Промислова Гідравліка": https://promhydraulic.com.ua/ua/
Телефонуйте: +380 (95) 670-15-32, +380 (98) 533-91-67, +380 (96) 244-48-42