3 Way Distributor Valve

Ref. ABCD73
ABCD83
ABCD93

With Warning Light + Pressure Gauge

Main Dimensions

A - Reset position (with Lock)
B - Operation port 21
C - Operation port 22
D - Operation port 23
E - Lamp for PTO insert indication

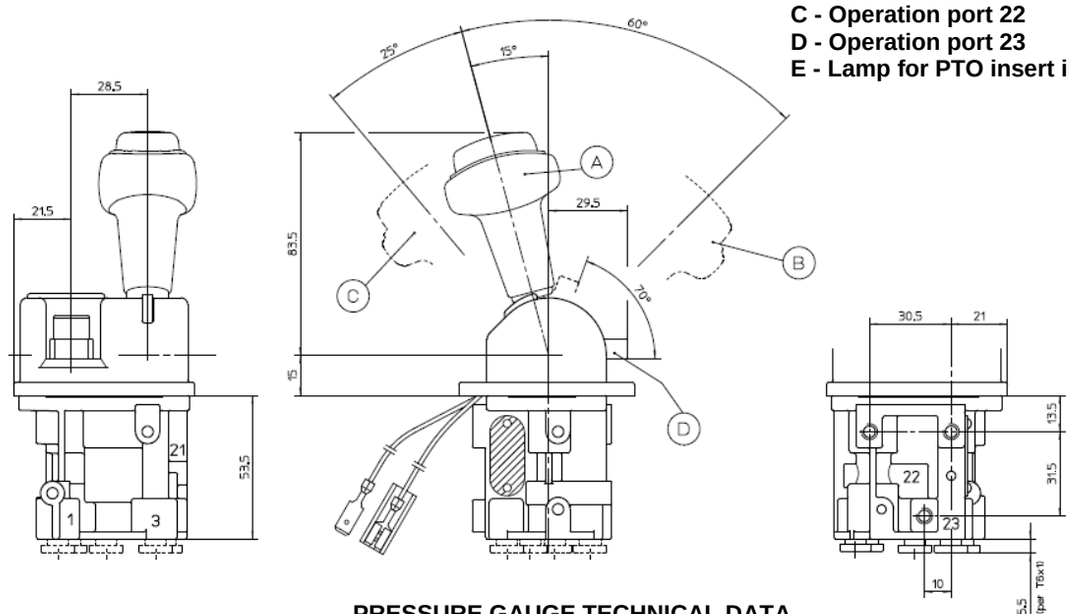

PRESSURE GAUGE TECHNICAL DATA
Operating voltage = 24VDC
Contacts = NO (normally open)

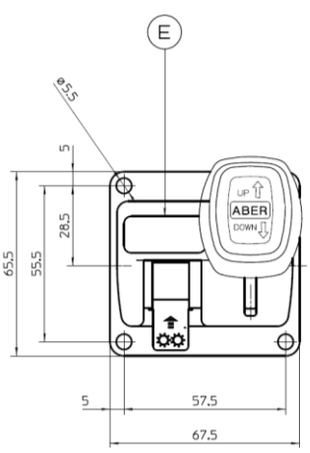

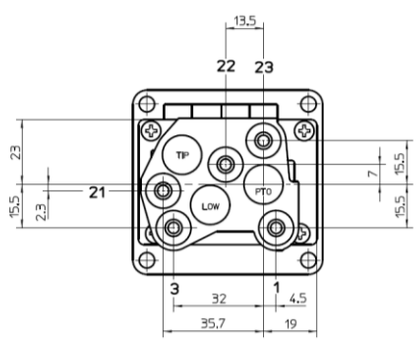

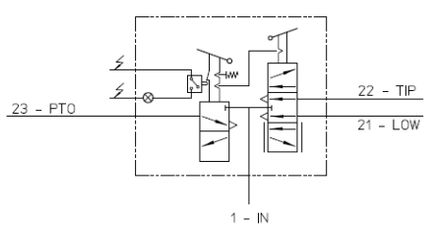

1- ENERGY SUPPLY
21- CONTROL LOWERING
22- CONTROL TIPPING
23- ENGAGEMENT POWER TAKE OFF
3- EXHAUST

<u>ABCD73</u> – Fix up and down
<u>ABCD83</u> – with automatic return up and down
<u>ABCD93</u> – with automatic return up and fix down

(Dimensions in mm)

Main Data		
Working medium		**Air**
Operating pressure (Bar)		**up to 12**
Working temperature	**Distributor valve**	**- 40 ºC / + 80 ºC**
	Automatic fittings	**- 20 ºC / + 80 ºC**
Nominal diameter (mm)		**4**
Weight (Kg)		**0,4**

ABER is constantly engaged in improving its products and, therefore, reserves itself the right to modify without any further notice the characteristics shown

ABER - Embraiagens e Comandos Hidráulicos - A. B. LDA
Rua Francisco de Almeida, Nº 30 – Vila Nova da Telha – 4470 MAIA - Portugal
Telefone: +351.22.9438070 Fax: +351.22.9420823 e-mail: aber@aber.pt http://www.aber.pt

CTI ABCD73/83/93 1406- 1

ТОВ "Промислова Гідравліка": https://promhydraulic.com.ua/ua/
Телефонуйте: +380 (95) 670-15-32, +380 (98) 533-91-67, +380 (96) 244-48-42