P 160

ALUMINUM

WEIGHT	TEMPERATURE	
13,2 kg	-20°C	+95°C

TECHNICAL DATA

Fluid connections	**1" BSPP**
Air connection	**1/2" BSPP**
Max. flow rate	**170 lt/min**
Max air pressure	**8 bar**
Max delivery head	**80 m**
Max suction lift dry	**5 m**
Max suction lift wet	**9,8 m**
Max solid passing	**7,5 mm**
Noise level	**75 dB**
Max viscosity	**35.000 cps**
Displacement per stroke	**700 CC ~**

Displacement per stroke may vary based on suction condition, discharge head, air pressure and fluid type.

Ex II 3/3 G Ex h IIB T4 Gc

Ex II 3 D Ex h IIIB T135°C Dc X

PERFORMANCE

The curves and performance values refer to pumps with submerged suction and free delivery outlet, with water at 20 °C. These data may vary according to the construction materials and hydraulic conditions.

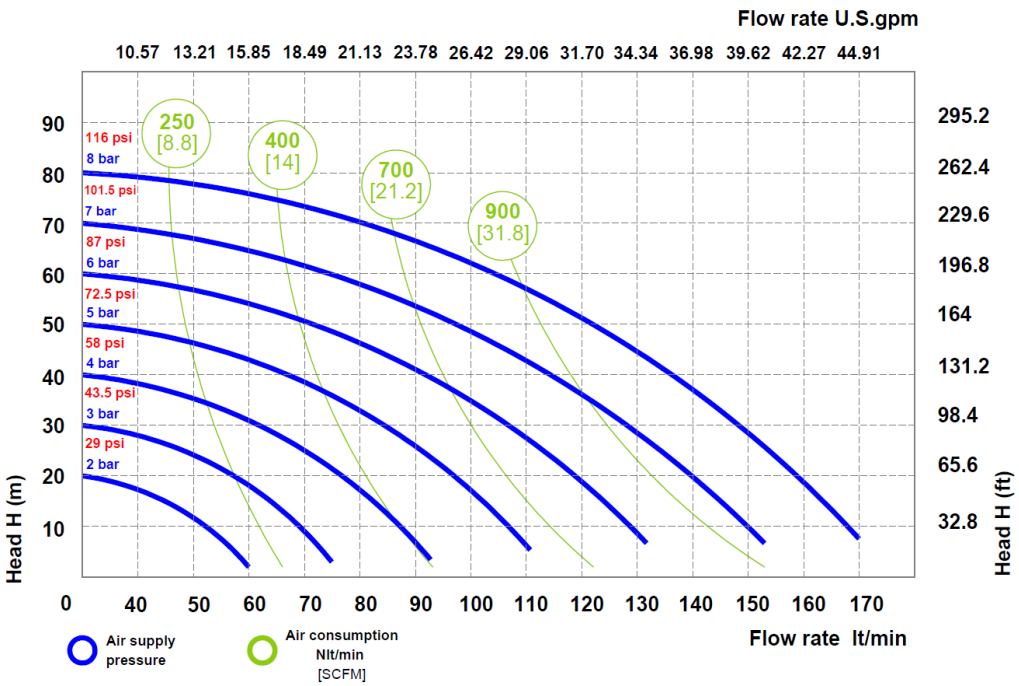

fluimac pump solution

FLUIMAC S.r.l. - Via Breascia ,1 - 21049 - Tradate - VA - ITALY
info@fluimac.com - www.fluimac.com
tel. +39 0331 866688 - Fax +39 0331 864870
P.I./VAT 03259160129

Made in Italy

ISO 9001:2008

P 160

COMPOSITION

MODEL	CASING	DIAPHRAGM	BALLS	SEATS	GASKET	CONNECTIONS	ATEX	PORTS
P0160	A = ALU	HT = HYTREL+PTFE MT = SANTOPRENE+PTFE H = HYTREL W = SANTOPRENE H.R. D = EPDM N = NBR	T=PTFE S=SS D = EPDM N = NBR	S=SS	D = EPDM V = VITON N = NBR T = PTFE	1 = BSPP 2 = FLANGED 5 = NPT	- = ZONE 2	AB = STANDARD

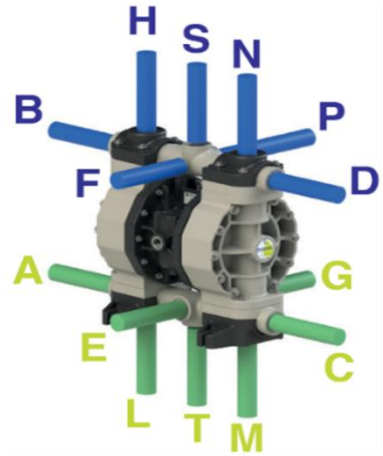

AVAILABLE CONNECTIONS

DELIVERY: B-D-S-F-P-H-N

SUCTION: A-C-T-E-G-L-M

PACKING DIMENSION

CARTON BOX: 43 x 27 x 45 cm

DIMENSIONS

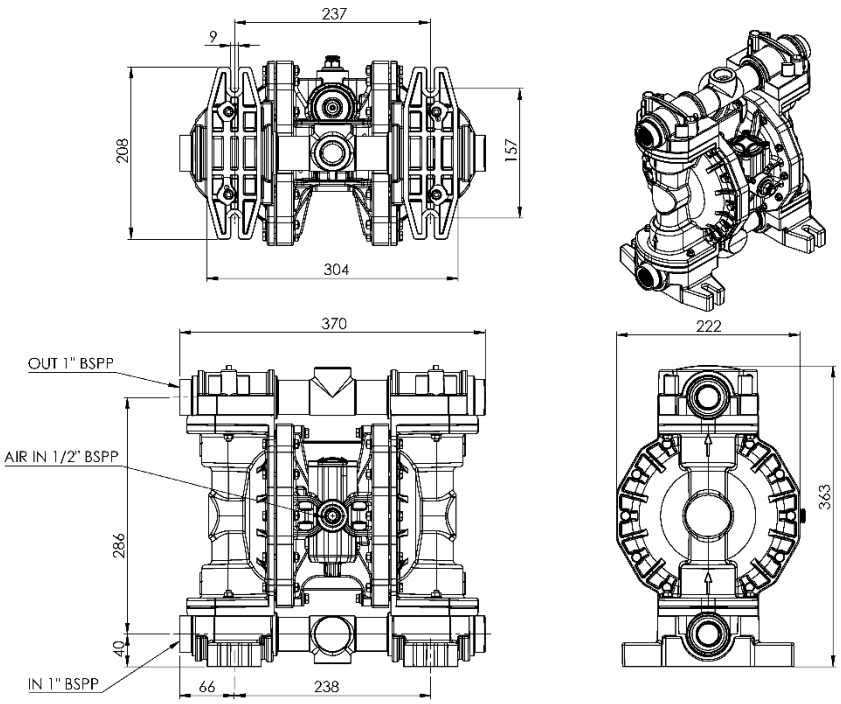

Technical data are approximate and not binding for the manufacturer who reserves the right to change them without notice at any time.

fluimac pump solution

FLUIMAC S.r.l. - Via Breascia ,1 - 21049 - Tradate - VA - ITALY
info@fluimac.com - www.fluimac.com
tel. +39 0331 866688 - Fax +39 0331 864870
P.I./VAT 03259160129

Made in Italy

ISO 9001:2008