Transfer or duplication of this document as well as the utilization or communication of its contents are prohibited unless explicit authorization is granted. Violations will be liable for compensation. All rights reserved for patent, utility model or designs registrations. 除非经予明确授权，否则禁止传让、复制、利用、交流本文件的内容。侵犯者将负赔偿责任。本公司保留对涉及专利、实用新型和外观设计的所有权利。

未注公差/General tolerances(mm)														
0 ~ 3	>3 ~ 6	>6 ~ 10	>10 ~ 18	>18 ~ 30	>30 ~ 50	>50 ~ 80	>80 ~ 120	>120 ~ 180	>180 ~ 250	>250 ~ 315	>315 ~ 400	>400 ~ 500	>500	0.1/10
±0.12	±0.18	±0.22	±0.26	±0.31	±0.37	±0.57	±0.80	±0.93	±1.05	±1.15	±1.60	±2.20	±2.50	±2°

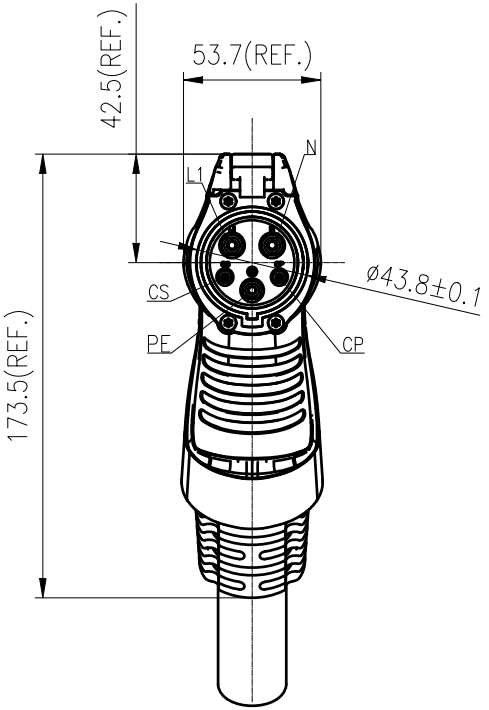

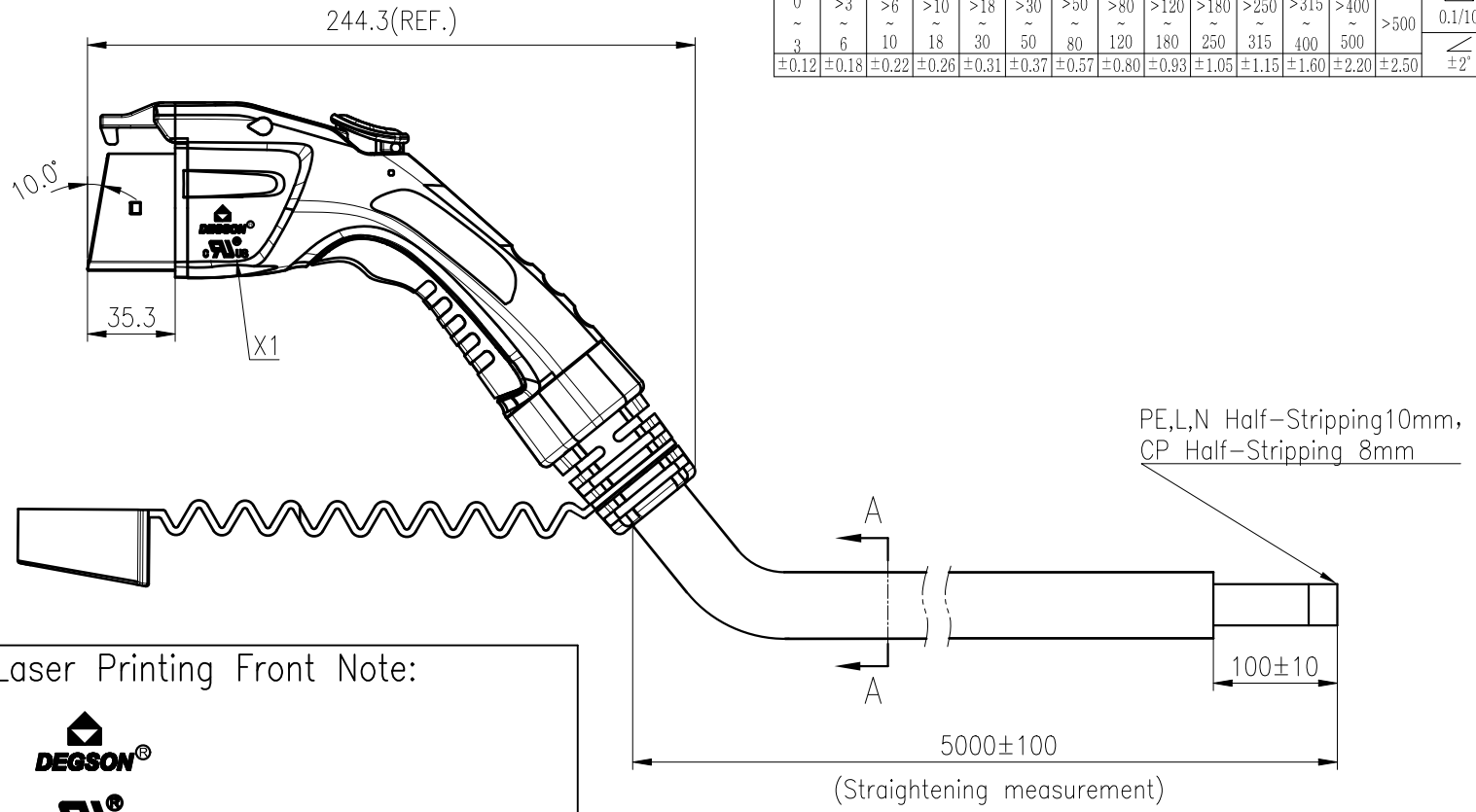

Wiring diagram

L1 8AWG Brown
N 8AWG Blue
PE 8AWG Yellow/Green

CS
CP 18AWG Red

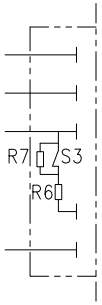

R6=150Ω±3%
R7=330Ω±3%

X1

Laser Printing Front Note:

DEGSON®

cULus

Laser Printing Back Note(Arial):

MAAC-S-040A-V4-03-5.0M-10A(H)
40A 250V AC
SAE J1772:2017
TYPE 4
20xxxxxx-xxxx
CAUTION-Do not use this product
if any damage
ATTENTION - n'utilisez pas ce
produit s'il y a des dommages

A—A

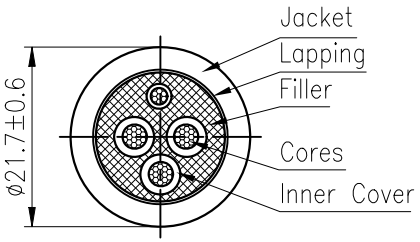

额定电压电流/Rated Voltage/Current	250V AC/40A
绝缘电阻/Insulate Resistance	>100MΩ,500V DC 1min
耐压/Withstanding Voltage	L、N and PE ,2500V AC 1min L and N ,2500V AC 1min
防护等级/Ingress Protection	TYPE 4
插拔寿命/Insertion/Pullout Times	10,000 Times
插拔力/Insertion/Pullout Force	<75N
使用温度范围/Operating temperature(°C)	−30~+50
线材规格/Cable specification	3*8AWG+1*18AWG Black
标准/Reference standard	SAE J1772:2017
符合RoHS环保要求/Conform to RoHS	Yes

DEGSON	MATERIAL:		SURFACE/COLOR:		
	MAT NO./REV: /		MAT STATUS:		
APPD:	NAME MAAC-S-040A-V4-03-5.0M-10A(H)				
CHKD:					
DRFT: ZhouC	2023.02.27	DRAWING NO.	TYPE CUSTOMER DRAWING	DRAWING STATUS	SCALE 1:3 / SHEET 1/1
A4	mm (inch)				

REV	ECN	DESCRIPTION	DRFT	DATE