Total Length	Tolerance
0~ 1000mm	±50
1001~ 5000mm	±100
>5000mm	±200

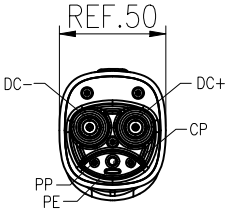

VIEW B

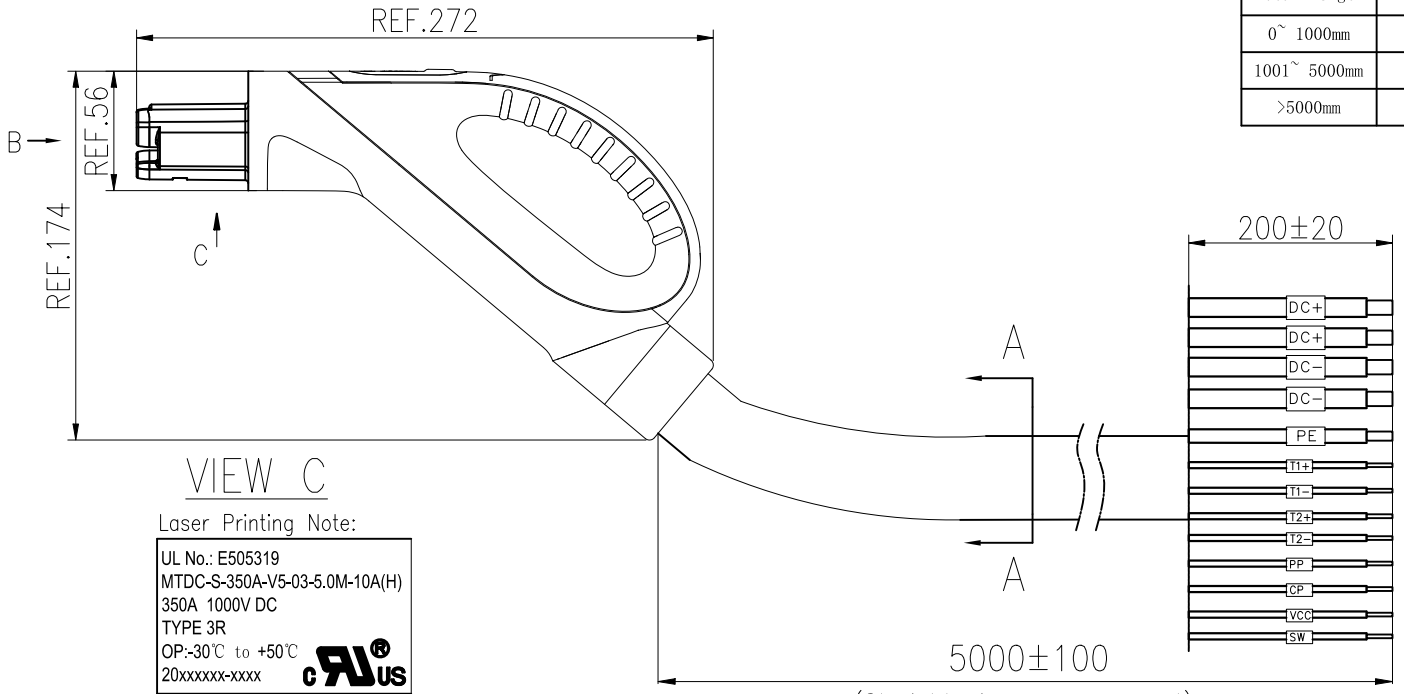

VIEW C

Laser Printing Note:

UL No.: E505319
MTDC-S-350A-V5-03-5.0M-10A(H)
350A 1000V DC
TYPE 3R
OP:-30℃ to +50℃
20xxxxxx-xxxx

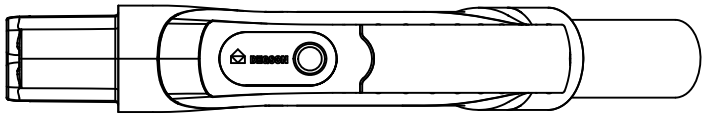

接线图

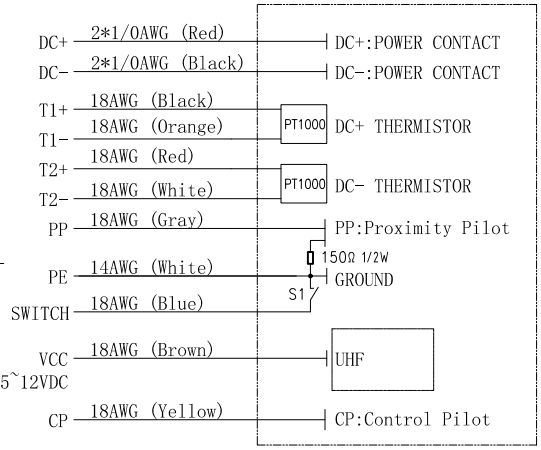

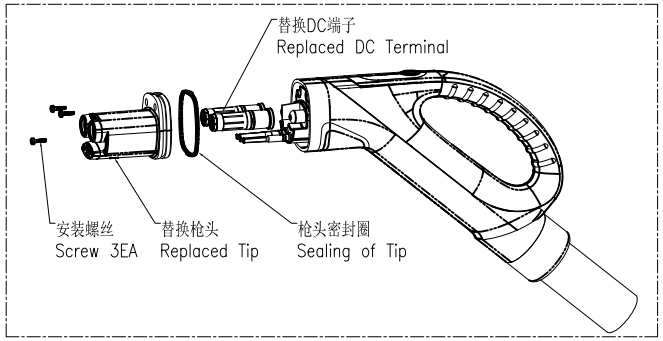

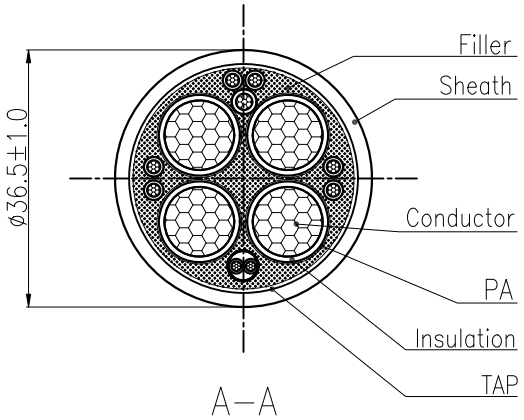

A−A

额定电压电流/Rated Voltage/Current	1000V DC/350A
绝缘电阻/Insulation resistance	>100MΩ,500V DC 1min
耐压/Withstanding voltage	DC+/DC− and PE ,4200V DC 1min
	DC+ and DC− ,4200V DC 1min
防护等级/Ingress protection	TYPE 3R / IP67(ENCLOSED)
插拔寿命/Insertion/Pullout times	12000
插拔力/Insertion/Pullout force	<90N
使用温度范围/Operating temperature(°C)	−30℃ to +50℃
线材规格/Cable specification	4*1/0AWG+14AWG+P2*18AWG+6*18AWG
标准/Reference standard	NACS,UL2251
符合RoHS环保要求/Conform to RoHS	Yes
UHF发射频率/UHF Transmitter Frequency	315MHz

REV	ECN	DESCRIPTION	DRFT	DATE
D0-1	/	Initial Release	Li WJ	25.07.04

DEGSON

APPD:
CHKD:
DRFT: Li WJ 25.07.04
A4 mm (inch)

MATERIAL:
SURFACE/COLOR:
MAT NO/REV: D0−1
MAT STATUS:
NAME: MTDC−S−350A−V5−03−5.0M−10A(H)

DRAWING NO.	TYPE	DRAWING STATUS	SCALE	SHEET
	CUSTOMER DRAWING			1/1

Transfer or duplication of this document as well as the utilization or communication of its contents are prohibited unless explicit authorization is granted. Violations will be liable for compensation. All rights reserved for patent, utility model or designs registrations. 除非给予明确授权，否则禁止传让、复制、利用、交流本文件的内容。侵犯者将负赔偿责任。本公司保留对涉及专利、实用新型和外观专利的所有权利。