XD Battery

Product User Manual

Please read the manual carefully before operation

Email:info@xdbattery.com

Manufacturer:Bejjing XD Battery Technology co.,Ltd

Add:Room 131, 1st Floor No.3 Building,No.27 Yard,Yongwang Road,Daxing district,Beijing,China

Email: info@xdbattery.com
www.xdbattery.com

Please comply with all warnings and operating instructions in this manual strictly.
Save this manual properly and read carefully the following instructions before installing the unit.
Do not operate this unit before reading through all safety information and operating instructions carefully.

Safety Precautions

Please observe the following safety rules when using batteries.Abuse of batteries can lead to overheating,bulging and fire of batteries and cause serious damage.
*DO **NOT** disassemble or modify the battery.
*DO NOT short circuit positive and negative terminals.
*DO **NOT** puncture,drop,crush,burn,penetrate,shake,or strike the battery.
*DO **NOT** expose to the environment,this battery is not sealed.Please keep the battery away from water,heat sources,sparks,and hazardous chemicals.
*DO NOT dispose of the battery as household waste.Please use recycling channels in accordance with local,state,and federal regulations.
*Only charge the battery with a battery charger or charge controller that is compatible with lithium iron phosphate batteries.
*If the battery shuts off due to a low state of charge,please disconnect the battery from your equipment to eliminate parasitic loads and charge the battery as soon as possible.
*Please wear proper protective equipment when working on the battery.
*Please use insulated tools when working on the battery.
*Please keep the battery out of the reach of young children.
*Please use suitable handling equipment for safe transportation of the battery.

Battery Specifications

Nominal Characteristics	
Nomial Voltage	51.2V
Nomial Capacity	100Ah
Energy	5120Wh

Mechanical Characteristics	
Weight	47+/-0.5KG
Dimensions LxWxH	488*578*177.8mm (With handle and fixed bracket)
Waterproof level	IP43

Electrical Characteristics	
Voltage Window	43.2～57.6V
Charge Cut-off Voltage	57.6V
Discharge Cut-off Voltage	43.2V
Max.Continue Charge Current	50A
Max.Continue Discharge Current	100A
Efficiency	≥95%
Internal resistance	≤16mΩ
Recommended SOC Working Range	15%~95%
Self Discharge	≤3%Per Month

Operation Conditions	
Cycle Life	>4000(@25℃,90%DOD)/>10 Years
Charge Temperature	0℃~55℃
Discharge Temperature	-20℃~60℃
Storage Temperature	-10℃~30℃
Storage Environment Humidity	5%~95%
Storage Altitude Requirement	≤1000m

Compliance	
Construction	1P16S
Shipping Classification	UN 38.3|Class 9|UN3480|MSDS
Cell Type	16×3.2V 100Ah LiFePO4

Package Contents

1-xdbatterym LiFePO4 Battery
1-User Manual
1-Accessory Kit:including positive/negative parallel cable,positive/negative discharge cable,earth cable,communication cable,rack.

*If you order more than 4 batteries,the accessories do not include the rack,you need to configure the cabinet.

Performance Features

1.The energy storage system realizes energy storage for customers to avoid the business interruption in the communication system due to power outages and other situations;
2.The rack-type design supports parallel expansion,and high-energy-density battery products achieve the same energy supply in a smaller volume,reducing the space occupation of the equipment room;
3.BMS management system for communication lithium batteries,which can monitor allsingle cell voltages in the battery pack,total battery pack current,total voltage,ambient temperature and many other parameters in real time,with a number of protection functions such as preventing battery overcharge and overdischarge,which can improve battery utilization efficiency and extend battery life.
4.High-energy,low-power lithium equipment,to achieve higher energy supply, lower energy consumption,and reduce environmental pollution.
5.Adopt all-around and multi-level battery protection strategy and fault isolation measures to ensure safe operation of the energy storage system.

Typical Applications

·Small-capacity home storage equipment
·Remote switch
·Mobile communication equipment
·Transmission equipment
·Satellite earth stations
.Microwave communication equipment and other backup power
It has the function of centralized control,battery maintenance and management, meet the requirements of unattended.

Panel Introduction

1.Front Panel

Picture:

1.1 LED Indicator Definition

LED light:4 green capacity indicators,1 red alarm indicator,1 green operation indicator

SOC			ALM	RUN

1.2 Status Indicator Description

System Status	Abnormal Events	RUN	ALM	Capacity LED	Description
		●	●	• • • •	
Shut down		Off	Off	All Off	
Standby	Normal	Flashing 1	Off	All Off	
	Alarm	Flashing 1	Flashing 2	All Off	
	Protection	Off	Bright	All Off	
Charge	Normal	Bright	Off	According to the capacity LED indication Maximum indication LED Flashing 2	
	Over-voltage alarm	Bright	Off	According to the capacity LED indication Maximum indication LED Flashing 2	
	Over-current and temperature alarms	Bright	Flashing 2	According to the capacity LED indication Maximum indication LED Flashing 2	
	Over-voltage protection	Flashing 1	Off	Bright	
	Over-current protection	Bright	Off	According to the capacity LED indication Maximum indication LED Flashing 2	

Discharge	Normal	Flashing 3	Off	According to the capacity LED indication	
	Alarm	Flashing 3	Flashing 2	According to the capacity LED indication Maximum indication LED Flashing 2	
	Under-voltage protection	Flashing 1	Flashing 2	According to the capacity LED indication	
	Over-current Short Circuit Temperature Reverse connection Protection	Off	Bright	All off	

Flashing Description

Flashing style	Bright	Off
Flashing 1	0.25S	3.75S
Flashing 2	0.5S	0.5S
Flashing 3	0.5S	1.5S

1.3 Capacity Indication Description

Status		Charge				Discharge			
Capacity indicator light		L4 •	L3 •	L2 •	L1 •	L4 •	L3 •	L2 •	L1 •
SOC	0～25%	Flashing 2	Off	Off	Off	Bright	Off	Off	Off
	25～50%	Bright	Flashing 2	Off	Off	Bright	Bright	Off	Off
	50~75%	Bright	Bright	Flashing 2	Off	Bright	Bright	Bright	Off
	75～100%	Bright	Bright	Bright	Flashing 2	Bright	Bright	Bright	Bright
Operation indicator light		Bright				Flashing 3			

1.4 DIP Switch Setting

For multiple parallel communication operation,you need to configure the DIP address of each PACK first.

Address of 0 is defined a The black dot is the DIP position,same as below)

Address 1 Address2 binary,other addresses and so on.

Main frame setting:

DIP address 32 is Pylontech,Deye,Goodwe,Megarevo agreement,address 48 is Victron,SMA agreement,(address 32 and address 48,only one can be selected, can not be dialed at the same time),CAN line is only connected to the Main frame BMS,can communicate with the inverter through CAN.

Slave settings:

set according to the device order,slave address range O to 15,16 parallel.(As in Table 1)

Slave settings (Table 1)

Address	DIP Switch position				Reserved	Main Frame	Description
	#1	#2	#3	#4	#5	#6	
0	OFF	OFF	OFF	OFF	OFF	OFF	(Slave)Pack0
1	ON	OFF	OFF	OFF	OFF	ON	(Slave)Pack1
2	OFF	ON	OFF	OFF	OFF	OFF	(Slave)Pack2
3	ON	ON	OFF	OFF	OFF	OFF	(Slave)Pack3
4	OFF	OFF	ON	OFF	OFF	OFF	(Slave)Pack4
5	ON	OFF	ON	OFF	OFF	OFF	(Slave)Pack5
6	OFF	ON	ON	OFF	OFF	OFF	(Slave)Pack6
7	ON	ON	ON	OFF	OFF	OFF	(Slave)Pack7
8	OFF	OFF	OFF	ON	OFF	OFF	(Slave)Pack8

9	ON	OFF	OFF	ON	OFF	OFF	(Slave)Pack9
10	OFF	ON	OFF	ON	OFF	OFF	(Slave)Pack10
11	ON	ON	OFF	ON	OFF	OFF	(Slave)Pack11
12	OFF	OFF	ON	ON	OFF	OFF	(Slave)Pack12
13	ON	OFF	ON	ON	OFF	OFF	(Slave)Pack13
14	OFF	ON	ON	ON	OFF	OFF	(Slave)Pack14
15	ON	ON	ON	ON	OFF	OFF	(Slave)Pack15
32	OFF	OFF	OFF	OFF	OFF	ON	(Main frame) Pack32 Pylontech,Deye Goodwe Megarevo Agreement
48	OFF	OFF	OFF	OFF	ON	ON	(Main frame) Pack48 Victron、SMA Agreement

1.5 Communication

RS485 interface,it can realize the monitoring and management of multi-unit in parallel,the CAN interface can realize the communication with PC or other intelligent terminal equipment.

●1.5.1 RS232 Interface (Reserved physical interface,no function)

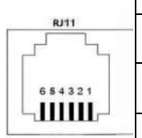

6P6C Vertical RJ11 Receptacle	
Pins	Definition
3	BMS TX
4	BMS RX
5	GND

●1.5.2 RS485 Interface

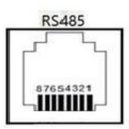

8P8C Vertical RJ485 Receptacle	
Pins	Definition
1、3	RS485_B
7	RS485_A
2、6	GND
4	CANH
5	CANH
8	NC

● 1.5.3 Main Frame CAN Interface to Communicate With PCS

(4.4 for mainframe settings),Schematic diagram of main frame CAN interface to communicate with PCS:

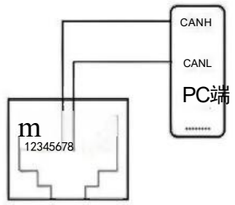

●1.5.4 Parallel Wiring Method

The battery packs communicate with each other in parallel via RS485 bus,and also with devices with RS485 bus,while the CAN interface realizes communication with PCS or other intelligent terminal equipment.

The PC host computer reads the information of any battery pack connected in parallel by RS485 bus.The wiring method of multi-unit parallel bus is shown below.

Wiring method 1:Separate CAN cable:1/2/3/6/7/8 NC,4-CANH 5-CANL

Wiring method 2:separate RS485 network cable:1/3 RS485-B,7 RS485-A,2/6-GND,4/5/8 NC(mainframe cable)

Wiring method 3:RS485 and CAN same port compatible cable:1/3 RS485-B,7RS485-A,2/6-GND,4-CANH 5-CANL,8 NC

Parallel cable:Only RS485 is connected from mainframe to slave (wiring method 2),other slave to slave use standard network cable.

Pins	Definition
1、3	RS485_B
7	RS485_A

1.6 Weak Power Switch (self-locking)

On/Off

When the weak switch is closed,the BMS works normally;when the weak switch is broken,the BMS performs shutdown.

1.7 Reset Button

A long press of the button enables software or hardware to reset the BMS and clear various abnormal states.

1.8 Power Socket

The power connection consists of 2 positive sockets in parallel and 2 negative sockets in parallel.

2.Battery Management System

2.1 BMS Profile

BMS is a protection board specially designed for 51.2V100Ah server rack battery.
One BMS protection board can only control one energy storage system.
The electrical schematic is as follows:

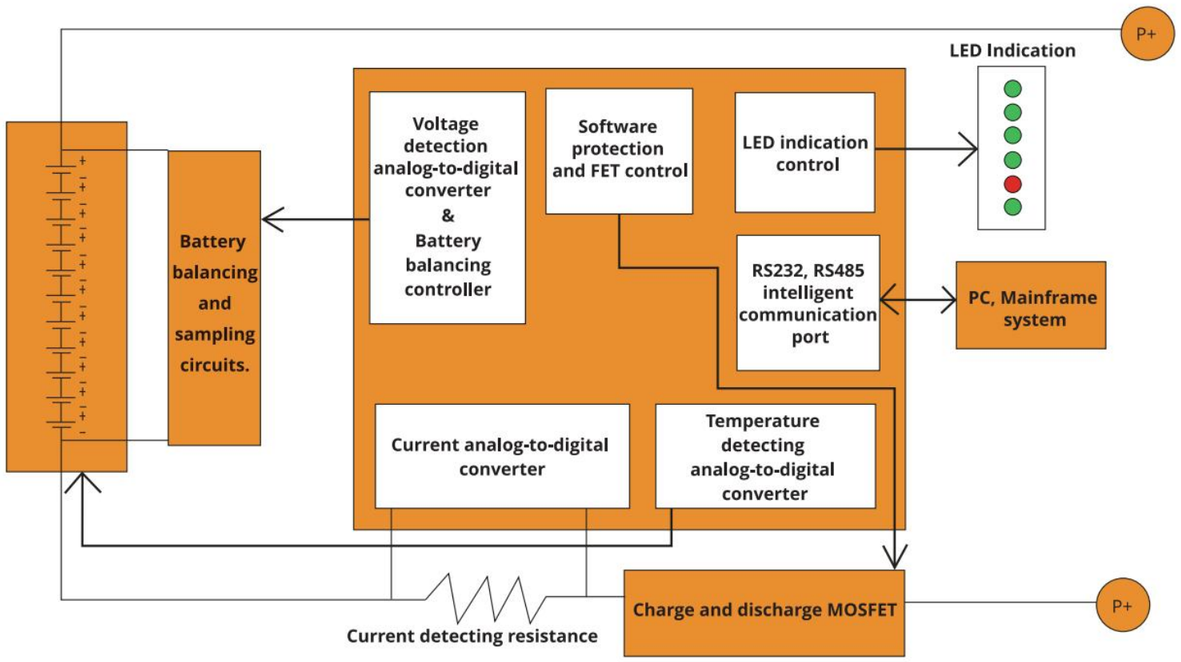

2.2 Function Description

●2.2.1 Voltage Detection and Protection Function
Over-voltage alarm,low-voltage alarm,over-voltage protection,and under-voltage protection functions for single cell and battery pack.

●2.2.2 Current Detection and Protection Function
Charging and discharging current detection,alarm and protection function.The upper computer shows negative current for discharging and positive current for charging.

●2.2.3 Short Circuit Protection Function
Output short circuit detection and protection function.

● 2.2.4 Temperature Detection Function
It has the ability to detect the temperature of the battery cell,environment and power MOS,and to warn and protect when charging and discharging at high and low temperature.
4-channel cell temperature detection,1-channel environmental temperature detection,1-channel power MOS temperature detection,and 6-channel NTC.

●2.2.5 Battery Capacity Calculation and Cycles Function
Real-time SOC calculation,full capacity and current capacity of the battery pack can be set by the host computer.After a complete charge/discharge cycle,the capacity after the cycle can be configured automatically.
With the function of calculating the number of charge/discharge cycles,when the accumulated discharge capacity of the battery pack reaches 80%or more,the number of cycles will be increased once.

●2.2.6 Charge and Discharge MOSFET Switching Function
Low internal resistance,high current,optimized design for large capacitive load turn-on,zero switching,and high charging withstand voltage of backup power applications.

●2.2.6 Charge and Discharge MOSFET Switching Function
Charge balance can be set flexibly(on voltage,balance voltage),which can effectively improve the battery life and cycle life.

● 2.2.8 LED Status Indication Function
6 LED lights,4 green capacity indicators,1 red alarm indicator,1 green operation indicator.

● 2.2.9 Smart Key Switch Function
Intelligent one-touch switch design,the system can be manually turned on and started when the power is off,and manually turned off when the power is not ready.Long press of the button can realize software or hardware reset BMS and clear various abnormal states.

● 2.2.10 RS485 Communication Function
With RS485 communication function,PC or intelligent front-end can monitor battery data,operation and parameter setting through telemetry,telematics,remote control and other commands to monitor BMS and and battery pack status in real time.

- 2.2.11 Upper Computer Control Function

It can set various battery management parameters such as single cell over-voltage,total battery over-voltage,charging over-current,discharging over-current,cell high and low temperature,environmental high and low temperature,equalization strategy,number of cells in series,battery capacity,etc.It can turn on and off the discharge MOS,charge MOS,current limit switch,buzzer alarm switch,forced sleep switch and online upgrade of system software.

- 2.2.12 Charging Current-limiting Function

With current limiting function,this product is passive 10A current limiting by default.

- 2.2.13 Hardware Voltage Detection Function

The BMS equipped with a unique hardware detection protection circuit.This ensures that the BMS can operate safely and reliably for long periods of time under abnormal conditions.

- 2.2.14 Historical Data Storage Function

With history record storage function,the storage capacity is not less than 500 records,which is convenient for system monitoring,analysis and maintenance.

- 2.2.15 Parallel Communication Function

Parallel communication function can be realized through RS485 interface,with a DIP switch for setting the address in parallel communication,and the upper computer can monitor the battery pack data cyclically after parallel connection.

Attachment:parameter accuracy requirements

Temeprature	±2℃
Voltage	±10mV(@0℃—45℃);±20mV(@-20℃—0℃&45℃—70℃)
Current	±2%(Charge and discharge current above 50%range)
Capacity	±5%(Battery pack capacity above 50%range)
Temperature rise	≤55℃(Continuous charge and discharge 100A

2.3 BMS Pprotection Parameters

Function name	Function name	Parameters	Note
Single cell voltage alarm	Over-voltage alarm	3640mV	
	Under-voltage alarm	2650mV	
Single cell over-voltage protection	Over-voltage protection	3750mV	
	Over-voltage protection delay	3S	
	Over-voltage protection recovery	3340mV	
Single cell under-voltage protection	Under-voltage protection	2500mV	
	Under-voltage protection delay	3S	
	Under-voltage protection recovery	3000mV	
Battery voltage alarm	Over-voltage alarm	57V	
	Under-voltage alarm	46V	
Battery over-voltage protection	Over-voltage protection	57.6V	
	Over-voltage protection delay	3S	
	Over-voltage protection recovery	54.6V	
Battery under-voltage protection	Under-voltage protection	43.2V	
	Under-voltage protection delay	3S	
	Under-voltage recovery	51.2V	

Cell temperature alarm	High temperature charging alarm	50℃	
	Low temperature charging alarm	0℃	
	High temperature discharge alarm	50℃	
	Low temperature discharge alarm	0℃	
Cell charge temperature	High temperature charging protection	60℃	
	High temperature charging recovery	50℃	
	Low temperature charging protection	-5℃	
	Low temperature charging recovery	0℃	
Cell discharge temperature	High temperature discharge protection	65℃	
	High temperature discharge recovery	50℃	
	Low temperature discharge protection	-10℃	
	Low temperature discharge recovery	0℃	
Ambient temperature alarm	Environmental high temperature alarm	50℃	
	Environmental low temperature alarm	0℃	
MOS high temperature alarm	MOS high temperature alarm	90℃	
Charging over-current alarm	Charge alarm current	100A	

Charging over-current protection	Charge protection current	105A	
	Charge protection delay	4S	
Discharge over-current alarm	Discharge alarm current	100A	
Discharge over-current protection	Discharge protection current	105A	
	Discharge over-current delay	5S	
Secondary discharge over-current protection	Secondary protection current	120A	
	Secondary over-current delay	500mS	
Output short circuit protection	Short circuit protection current	300A	
	Short circuit protection delay	300uS	
	Short circuit protection release	1、Detect the effective charging current 2、Retest every 1min, will lock after 3 consecutive attempts	
Automatic recovery of discharge current	Automatic recovery delay	Automatic recovery after 1min	1min automatic recovery attempt, will be locked after 3 consecutive attempts, can be recovered by manual or charging

Charge and Discharge

Charging

1.Only charge the battery with a battery charger(57.6V)or charge controller that is compatible with lithium iron phosphate batteries.For charging current,please check the battery specification in this manual according to the product model.
2.DO NOT exceed the maximum charge current to the battery
3.Fully charge the battery before first use.

4.If you want to know the capacity of battery,please check the SOC indicator on the battery panel.
5.LiFePO4 does not suffer a "memory effect"so please keep the battery fully charged for daily use.
6.Do not charge the battery at temperatures below 0℃.This can cause damage to the battery cells.

Discharging

1.Make sure your load accepts 51.2V nominal voltage.DO NOT exceed the maximum discharge current to the battery.
2.Ensure the connection between the battery and the load can handle the current draw.Please consult references for the appropriate wire type.
3.DO NOT connect large loads to the battery when it is running low.
4.The battery output voltage is 51.2V,operating voltage range 43.2V-57.6V,do NOT rely on voltage as an indicator of remaining capacity.
5.If the battery shuts off due to a low state of charge(SoC),please disconnect the battery from the discharge equipment to eliminate potential parasitic loads and charge the battery as soon as possible.Failure to do so may cause irreversible damage to the battery.

Load Power

1 battery,support load rated power≤5KW
2-4 batteries parallel,support load rated power≤5KW,or 6KW high-power discharge≤1 hour
If your load power exceeds 6KW,please contact our technical support

Series and Parallel Connection

1.Before connecting,each battery must be independtly fully charged.Please make sure that the voltage of each battery is within 0-0.3V after subtraction before connecting in parallel.

This model can be connected with up to 16 units 51.2V100Ah batteries in parallel.

Please DO NOT STRING THE BATTERY IN SERIES.

-Parallel Connecting Total voltage and capacity:51.2V 1600Ah;

2.If you need more batteries in parallel,Please contact our customer service and we will give you professional guidance.

3.Dos

*Before making any connections,make sure to charge each battery up to 57.6V with a proper lithium charger.ALL BATTERIES SHOULD BE AT THE SAME STATE OF CHARGE PRIOR TO CONNECTING,otherwise you will encounter balance issues within your system.
*All cables and connections must be able to accommodate the high currents that can be delivered by the battery.Appropriate fuses and circuit breakers are highly recommended to protect downstream componentsfrom currentspikes and short circuits.
*In parallel battery banks,the cables between each battery should be of equal length to ensure that all batteries in the system can work equally together.
*To string multiple batteries in parallel,first connect the positive terminals of batteries to each other.Then do the same with the negative terminals.Finally, connect the positive and negative terminals of the first battery to the system.This type of arrangement is used to increase the overall battery capacity while keeping the voltage the same.

4.Don'ts.

*DO NOT string batteries with different chemistries,models,rated capacity in series or parallel.
*DO **NOT** connect batteries in series.

Maintain and Store

Maintain:Our Batteries require very little maintenance.If your batteries are in series and not being charged by a multi-bank charger it is recommended that you fully charge the batteries individually once every three months if the system is used frequently.This will internally balance your batteries to ensure that they will reach their expected life span and allow you to get the full power out of them with each use.If your batteries are in parallel this is not necessary,just make sure the batteries are charged to 56V-57.6V for internal balance.Our BMS has a built-in passive balancing system that will take care of this for you.
Store:We recommend bringing the batteries to a 100%state of charge.Then, disconnect the battery from any loads by removing the negative cable from one battery.On average,the batteries lose approximately 2-3%capacity per month. This is subject to increase if stored in extreme environmental conditions.
The battery stored for a long time(more than 2 months)should be kept in a dry and cool place.

Warranty and Warranty Exclusions

We're dedicated to making the most reliable batteries on the planet.But we understand that things happen,so if anything is wrong with your product,we'll work to make it right.

Battery ≥5120 Wh,8-Year Limited Warranty.

This warranty applies to only the original owner and is void if the product is used commercially,structurally altered,subjected to stress beyond the physical limits of the materials used in the body or components,or is damaged as a result of abnormal use.Punctures and normal wear and tear are not warranted.

NON-TRANSFERABLE

This Limited Warranty is to the original purchaser of the Product and is not transferable to any other person or entity.Please contact the place of purchase regarding any warranty claim.

WARRANTY EXCLUSIONS

The Manufacturer has no obligation under this Limited Warranty for Product subjected to the following conditions (including but not limited to):

·Damage due to improper installation;loose terminal connections,under-sized cabling,incorrect connections (series and parallel)for desired voltage and AH requirements,or reverse polarity connections.

·Environmental damage:inappropriate storage conditions as defined by the Manufacturer;exposure to extreme hot or cold temperatures,fire or freezing,or water damage.

·Damage caused by collision.

·Damage due to improper maintenance,under or over-charging the Product,dirty terminal connections.

·Product that has been opened,modified,or tampered with.

·Product that was used for applications other than which it was designed and intended for,including repeated engine starting.

·Product that was used on an over-sized inverter/charger without the use of a Manufacturer-approved current surge limiting device.

·Product that was under-sized for the application,including an Air Conditioner or similar device having a locked rotor start up current that is not used in conjunction with a Manufacturer-approved surge-limiting device.

·Product not stored in adherence to the Manufacturer's storage guidelines, including storage of the Product at a low state-of-charge.

This Limited Warranty does not cover a Product that has reached its normal end of life due to usage which may occur prior to the Warranty Period.A battery can deliver only a fixed amount of energy over its life which will occur over different periods of time depending on the application.The Manufacturer reserves the right to deny a warranty claim if the Product is determined,upon inspection,to be at its normal end of life even if within the Warranty Period.

Return &Refund

Xdbattery works hard to ensure a positive shopping experience with us.We're bummed if you're not 100%satisfied with the items you received,and we gladly accept returns within 30 days of receipt for most items in new condition.

If an item is new,unused,and in the original packaging,we are happy to accept a return up to 30 days from the original invoice date with no restocking fee.If the item has been installed,used,or no longer has the original packaging,we will assess a restocking fee that will be shared when the return merchandise authorization (RMA)is issued.

Please note that Xdbattery will not accept returns with product modifications as it voids our warranty policy.Any modified products received will be returned to you at your expense.

All returns must include the following:

Copy of receipt or invoice

Video or photo of the faulty product (if applicable)

Mailing address

Contact telephone number

Return Shipping Method

1.Please send email us to get your RMA number.

2.We willemail you with your RMA number as soon as we can.After receiving return instructions from us,please package up the item(s)to be returned with the original packing.

3.Drop off your package at the local post office.

4.Most returns are processed within 5 business days after we receive your package.An email will be sent when your return is processed.

If you have any questions about our battery,Please feel free to let us know.

Email:service@xdbatterym.com.

Shipping

We've partnered with FedEx to offer free ground shipping on any order that is delivered to the continental U.S.We ask for a direct signature on orders with FedEx ground to ensure your product has safely reached your final destination. Shipping to Alaska and Hawaii is available,and shipping quotes can be provided upon request.

International shipments are available via a US-based freight forwarder,but all additional charges are the responsibility of the customer,including duties,taxes, freight,and any potential warranty return.