TP801/TP805/TP806
Programing Manual

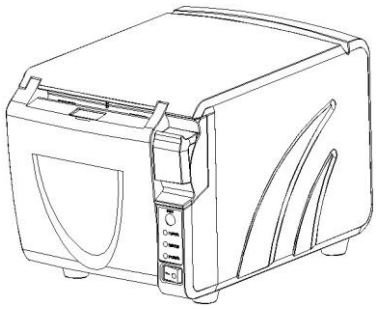

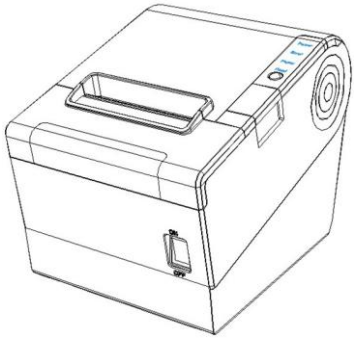

Xiamen Hanin Electronic Technology Co.Ltd.
ADD: Room 305A,Angye Building,Pioneering Park,
Torch High-tech Zone,Xiamen,China 361009
Tel.: +86-(0)592-5885993
Fax: +86-(0)592-5885992
Web: www.hprt.com

REVISION RECORDS

REV	DATE	DESCRIPTION	Drawn	Checked	Approved
1.0	2013.07.15	— —	Chen weihua	Lin yang	Ren xiaowei
1.1	2013.08.27	1. delete codepages(page44\page53) 1. delete commands(GS (K pL pH fn m (fn=50))	Chen weihua	Lin yang	Ren xiaowei
1.2	2013.12.06	1. modified codepages(P29)	Chen weihua	Lin yang	Ren xiaowei
1.3	2013.12.11	1. modified codepages(P29)	Chen weihua	Lin yang	Ren xiaowei

Contents

1. Overview 7
1.1 Key terms 7
1.2 Command Notation 7
2. Commands 8
HT 8
LF 8
FF (In page mode) 8
CR 8
CAN 9
DLE EOT n 9
DLE ENQ n 11
DLE DC4 fn m t (fn = 1) 12
DLE DC4 fn a b (fn = 2) 13
DLE DC4 fn d1…d7 (fn = 8) 14
ESC FF 14
ESC SP n 15
ESC ! n 15
ESC $ n L n H 16
ESC % n 16
ESC & y c1 c2 [x1 d1...d(y × x1)]...[xk d1...d(y × xk)] 17
ESC * m nL n H d1...dk 17
ESC – n 18
ESC 2 19
ESC 3 n 19
ESC = n 19
ESC ? n 20
ESC @ 20
ESC D n1...nk NUL 21

ESC E n 21
ESC G n 21
ESC J n 22
ESC L 22
ESC M n 23
ESC R n 23
ESC S 24
ESC T n 24
ESC V n 25
ESC W xL xH yL yH dxL dxH dyL dyH 25
ESC \ nL nH 26
ESC a n 27
ESC c 3 n 27
ESC c 4 n 28
ESC c 5 n 28
ESC d n 29
ESC p m t1 t2 29
ESC t n 30
ESC { n 31
FS g 1 m a1 a2 a3 a4 nL nH d1...dk 32
FS g 2 m a1 a2 a3 a4 nL nH 33
GS ! n 33
GS $ nL nH 34
GS (A pL pH n m 34
GS (D pL pH m [a1 b1]...[ak bk] 35
GS (L pL pH m fn [parameters] 36
GS 8 L p1 p2 p3 p4 m fn [parameters] 36
<Function 48> GS (L pL pH m fn (fn = 0, 48) 38
<Function 50> GS (L pL pH m fn (fn = 2, 50) 38

<Function 51> GS (L pL p H m fn (fn = 3, 51) 38

<Function 64> GS (L pL p H m fn d1 d2 (fn = 64) 39

<Function 65> GS (L pL p H m fn d1 d2 d3 (fn = 65) 39

<Function 66> GS (L pL p H m fn kc1 kc2 (fn = 66) 40

<Function 67> GS (L pL p H m fn a kc1 kc2 b x L x H y L y H [c d1…dk]1…[c d1....dk]b (fn = 67) 40

<Function 69> GS (L p L p H m fn kc1 kc2 x y (fn = 69) 42

<Function 112> GS (L pL p H m fn a bx by c x L x H y L y H d1...dk (fn = 112) 42

GS (k pL p H cn fn [parameters] 44

<Function 065> GS (k pL p H cn fn n (cn = 48, fn = 65) 45

<Function 066> GS (k pL p H cn fn n (cn = 48, fn = 66) 46

<Function 067> GS (k pL p H cn fn n (cn = 48, fn = 67) 46

<Function 068> GS (k pL p H cn fn n (cn = 48, fn = 68) 47

<Function 069> GS (k pL p H cn fn m n (cn = 48, fn = 69) 47

<Function 070> GS (k pL p H cn fn m (cn = 48, fn = 70) 48

<Function 080> GS (k pL p H cn fn m d1 …dk (cn = 48, fn = 80) 49

<Function 081> GS (k pL p H cn fn m (cn = 48, fn = 81) 49

<Function 082> GS (k p L p H cn fn m (cn = 48, fn = 82) 50

<Function 165> GS (k p L p H cn fn n1 n2 (cn = 49, fn = 65) 50

<Function 167> GS (k p L p H cn fn n (cn = 49, fn = 67) 51

<Function 169> GS (k p L p H cn fn n (cn = 49, fn = 69) 51

<Function 180> GS (k pL p H cn fn m d1 …dk (cn = 49, fn = 80) 52

<Function 181> GS (k pL p H cn fn m (cn = 49, fn = 81) 52

<Function 182> GS (k p L p H cn fn m (cn = 49, fn = 82) 53

GS * x y d1...dk 53

GS / m 54

GS : 55

GS B n 55

GS H n 55

GS I n 56

GS L nL n H 57
GS P x y 57
<A> GS V m 58
<B> GS V m n 58
GS W nL n H 58
GS \ nL n H 59
GS ^ r t m 59
GS a n 60
GS f n 62
GS g 0 m nL n H 62
GS g 2 m nL n H 63
GS h n 64
<A> GS k m d1...dk NUL 64
<B> GS k m n d1...dn 64
GS r n 66
GS w n 67
ESC v 67
FS p n m 68
FS q n [x L x H y L y H d1...dk]1 ... [x L x H y L y H d1...dk]n 68
GS v 0 m xL x H y L y H d1...dk 70
ESC (A p L p H fn n c t1 t2 < Function 97 > 71
Appendix A 72

1. Overview

1.1 Key terms

Real-time commands:These commands are acted on immediately upon being received by the printer ;

Page mode:Under this mode, the printer stores all data in a specified memory and thinks of this as a virtual page. The page is printed when the printer receives print command either FF or ESC FF;

Standard mode: Standard mode is the default mode of printer, namely line mode. Under this mode, the printer prints data and feeds paper upon print line buffer full (data is enough for one print line) or receiving print command like LF;

HRI character: Barcode note character. Human Readable Interface;

NV:Non-volatile memory in which data stored does not loss when powered off. NV: Non-volatile;

RAM :Random Access Memory;

ASB : Auto Send Back

DPI: Print dots per inch (one inch equals to 25.4mm). It is us ed to identify the resolution of a printer.

Example, 203DPI means 203 print dots per inch. DPI: Dot Per Inch

1.2 Command Notation

[Name] The name of the command.

[Format] The code sequence.
[ ]k indicates the contents in brackets [ ] should be repeated k times.
[Range] Gives the allowable ranges, if any, for the command parameters.
[Default] Gives the default values, if any, for the arguments.
[Description] Describes the function of the command.
" – " in the table indicates 0 or 1.
[Notes] Provides important information on setting and using the printer command, if necessary.
[Reference] Gives references, if any.

2. Commands

HT

[Name] Horizontal tab

[Format] ASCII HT

Hex 09

Decimal 9

[Description] •Moves the print position to the next horizontal tab position.

LF

[Name] Print and line feed

[Format] ASCII LF

Hex 0A

Decimal 10

[Description] • Prints the data in the print buffer and feeds one line, based on the current line spacing.

FF (In page mode)

[Name] Print and return to standard mode (in page mode)

[Format] ASCII FF

Hex 0C

Decimal 12

[Description] • Prints all the data in the print buffer collectively and switches from page mode to standard mode.

CR

[Name] Print and carriage return

[Format] ASCII CR

Hex 0D

Decimal 13

[Description] • Executes one of the following operations.

Condition	Function
When automatic line feed is enabled.	Functions the same as **LF**.
When automatic line feed is disabled and when using the serial interface model.	This command is ignored.

CAN

[Name] Cancel print data in page mode

[Format] ASCII CAN

Hex 18

Decimal 24

[Description] • In page mode, deletes all the print data in the current print area.

DLE EOT n

[Name] Transmit real-time status

[Format] ASCII DLE EOT n

Hex 10 04 n

Decimal 16 4 n

[Range] 1 ≤ n ≤ 4

[Description] • Transmits the real-time status.

n	Function
1	Transmits printer status.
2	Transmits offline cause status.
3	Transmits error cause status.
4	Transmits roll paper sensor status.

• This printer transmits the following status in real time.

• Printer status (n = 1)

Bit	Off/On	Hex	Decimal	Status
0	Off	00	0	Fixed.
1	On	02	2	Fixed.
2	Off	00	0	Drawer kick-out connector pin 3 is LOW.
	On	04	4	Drawer kick-out connector pin 3 is HIGH.
3	Off	00	0	Online.
	On	08	8	Offline.
4	On	10	16	Fixed.
5, 6	--	--	--	Reserved.
7	Off	00	0	Fixed.

• Offline cause status (n = 2)

Bit	Off/On	Hex	Decimal	Status
0	Off	00	0	Fixed.
1	On	02	2	Fixed.
2	Off	00	0	Cover is closed.
	On	04	4	Cover is open.
3	Off	00	0	Paper is not being fed with the paper FEED button.
	On	08	8	Paper is being fed with the paper FEED button.
4	On	10	16	Fixed.
5	Off	00	0	No paper end stop.
	On	20	32	Printing stopped due to paper end.
6	Off	00	0	No error.
	On	40	64	Error occurred.
7	Off	00	0	Fixed.

• Error cause status (n = 3)

Bit	Off/On	Hex	Decimal	Status
0	Off	00	0	Fixed.
1	On	02	2	Fixed.
2	--	--	--	Reserved.
3	Off	00	0	No autocutter error.
	On	08	8	Autocutter error occurred.
4	On	10	16	Fixed.
5	Off	00	0	No unrecoverable error.
	On	20	32	Unrecoverable error occurred.
6	Off	00	0	No automatically recoverable error.
	On	40	64	Automatically recoverable error occurred.
7	Off	00	0	Fixed.

•Roll paper sensor status (n = 4)

Bit	Off/On	Hex	Decimal	Status
0	Off	00	0	Fixed.
1	On	02	2	Fixed.
2, 3	Off	00	0	Roll paper near-end sensor: paper adequate.
	On	0C	12	Roll paper near-end sensor: paper near end.
4	On	10	16	Fixed.
5, 6	Off	00	0	Roll paper end sensor (paper sensor): paper present.
	On	60	96	Roll paper end sensor (paper sensor): paper not present.
7	Off	00	0	Fixed.

[Notes] • Take the following into consideration:

• If the received data includes a data string matching this command, the printer performs this command.Users must consider this.

Example: Graphic data might accidentally include a data string matching this command.

• Do not embed this command within another command.

Example: Graphic data might include this command.

• Transmit this command using the following method:

• When this command is transmitted, the subsequent data must not be transmitted until the status is received.

• However, if this command must be transmitted continuously, it is possible to transmit up to 4 commands at once.

In this case, the subsequent data must not be transmitted until the all status is received.

If this command is transmitted without using the above method, the status may not be received.

DLE ENQ n

[Name] Send real-time request to printer

[Format] ASCII DLE ENQ n

Hex 10 05 n

Decimal 16 5 n

[Range] n = 1, 2

[Description] • Responds to a request in real-time from the host computer.

n	Function
1	Recovers from a recoverable error and restarts printing from the line where the error occurred. • This command is ignored unless a recoverable error has occurred.
2	Recovers from a recoverable error after clearing the receive and print buffers. • This command is ignored unless a recoverable error has occurred.

[Notes] • Use this command after removing the cause of the error.

• Take the following into consideration:

• If the received data includes a data string matching this command, the printer performs the command. Users must consider this.

Example: Graphic data might accidentally include a data string matching this command.

• Do not embed this command within another command.

Example: Graphic data might include this command.

[Reference] APPENDIX C

DLE DC4 fn m t (fn = 1)

[Name] Generate pulse in real-time

[Format] ASCII DLE DC4 fn m t

Hex 10 14 fn m t

Decimal 16 20 fn m t

[Range] fn = 1

m = 0, 1

1 ≤ t ≤ 8

[Description] • Outputs the pulse specified by t in real-time to connector pin m.

m	Connector pin
0	Drawer kick-out connector pin 2.
1	Drawer kick-out connector pin 5.

• t specifies the pulse on time or off time as [t × 100 ms].

[Notes] • Take the following into consideration:

- If the received data includes a data string with this command, the printer performs the command. Users must consider this.

Example: Graphic data might accidentally include a data string matching this command.

- Do not embed this command within another command.

Example: Graphic data might include this command.

[Reference] APPENDIX F

DLE DC4 fn a b (fn = 2)

[Name] Execute power-off sequence

[Format] ASCII DLE DC4 fn a b

Hex 10 14 fn a b

Decimal 16 20 fn a b

[Range] fn = 2

a = 1

b = 8

[Description]
- Executes the printer power-off sequence and transmits the power-off notice.
- Stores the values of the maintenance counter.
- Sets the interface to BUSY.
- Sets the printer to standby mode.

[Notes]
- Take the following into consideration:
- If the received data includes a data string matching this command, the printer performs the command. Users must consider this.

Example: Graphic data might accidentally include a data string matching this command.

- Do not embed this command within another command.

Example: Graphic data might include this command.

- This command does not shut the power off. The operator must turn the power off after receiving the power-off notice.
- If this command is executed, the printer will not continue to process anything. To recover the printer to print again, it is necessary to turn the power on again or execute a hardware reset.

[Reference] APPENDIX G

DLE DC4 fn d1…d7 (fn = 8)

[Name] Clear buffer(s)

[Format] ASCII DLE DC4 fn d1…d7

Hex 10 14 fn d1…d7

Decimal 16 20 fn d1…d7

[Range] fn = 8

d1 = 1, d2 = 3, d3 = 20, d4 = 1, d5 = 6, d6 = 2, d7 = 8

[Description]
- Clears all data stored in the receive buffer and the print buffer and transmits Clear response.
- If a recoverable error occurs, recovers from the error.

[Notes]
- Do not use this command in a system that uses the printer with the OPOS driver or the JavaPOS driver provided by Seiko Epson Corporation.
- Take the following into consideration:
- If the received data includes a data string matching this command, the printer performs the command.Users must consider this.

Example: Graphic data might accidentally include a data string matching this command.

- Do not embed this command within another command.

Example: Graphic data might include this command.

- Do not transmit the subsequent data until the status is received after transmitting this command.

ESC FF

[Name] Print data in page mode

[Format] ASCII ESC FF

Hex 1B 0C

Decimal 27 12

[Description]
- In page mode, prints all the data in the print buffer collectively.

ESC SP n

[Name] Set right-side character spacing

[Format] ASCII ESC SP n

Hex 1B 20 n

Decimal 27 32 n

[Range] 0 ≤ n ≤ 255

[Default] n = 0

[Description] • Sets the right-side character spacing to [n × (horizontal or vertical motion unit)].

[Note] • The maximum right-side spacing is 31.875 mm {203/180"}.

ESC ! n

[Name] Select print mode(s)

[Format] ASCII ESC ! n

Hex 1B 21 n

Decimal 27 33 n

[Range] 0 ≤ n ≤ 255

[Default] n = 0

[Description] • Selects the character font and styles (emphasized, double-height, double-width, and underlined) together.

(*n*) Bit	Off/On	Hex	Decimal	Function
0	Off	00	0	Character font A (12 × 24) selected.
	On	01	1	Character font B (9 × 17) selected.
1, 2	Off	00	0	Reserved.
3	Off	00	0	Emphasized mode is turned off.
	On	08	8	Emphasized mode is turned on.
4	Off	00	0	Double-height canceled.
	On	10	16	Double-height selected.
5	Off	00	0	Double-width canceled.
	On	20	32	Double-width selected.
6	Off	00	0	Reserved.
7	Off	00	0	Underline mode is turned off.
	On	80	128	Underline mode is turned on.

ESC $ n L n H

[Name] Set absolute print position

[Format] ASCII ESC $ n L n H

Hex 1B 24 n L n H

Decimal 27 36 n L n H

[Range] 0 ≤ (n L + n H × 256) ≤ 65535 (0 ≤ n L ≤ 255, 0 ≤ n H ≤ 255)

[Description] • Moves the print position to [(n L + n H × 256) × (horizontal or vertical motion unit)] from the left edge of the print area.

ESC % n

[Name] Select/cancel user-defined character set

[Format] ASCII ESC % n

Hex 1B 25 n

Decimal 27 37 n

[Range] 0 ≤ n ≤ 255

[Default] n = 0

[Description] • Selects or cancels the user-defined character set.

• When the LSB of n is 0, the user-defined character set is canceled.

• When the LSB of n is 1, the user-defined character set is selected.

ESC & y c1 c2 [x1 d1…d(y × x1)]…[xk d1…d(y × xk)]

[Name] Define user-defined characters

[Format] ASCII ESC & y c1 c2 [x1 d1…d(y × x1)]…[xk d1…d(y× xk)]

Hex 1B 26 y c1 c2 [x1 d1…d(y × x1)]…[xk d1…d(y× xk)]

Decimal 27 38 y c1 c2 [x1 d1…d(y × x1)]…[xk d1…d(y× xk)]

[Range] y = 3

32 ≤ c1 ≤ c2 ≤ 126

0 ≤ x ≤ 12 [when Font A (12 × 24) is selected]

0 ≤ x ≤ 9 [when Font B (9 × 17) is selected]

0 ≤ d ≤ 255

k = c2 – c1 +1

[Description]
- Defines the user-defined character pattern for the specified character codes.
- y specifies the number of bytes in the vertical direction.
- c1 specifies the beginning character code for the definition, and c2 specifies the final code.
- x specifies the number of dots in the horizontal direction from the left edge.
- d specifies the defined data (column format).

[Note]
- User-defined characters and a downloaded bit image (GS ∗) cannot be defined simultaneously. When this command is executed, the downloaded bit image is deleted.

ESC ∗ m nL n H d1…dk

[Name] Select bit-image mode

[Format] ASCII ESC ∗ m nL n H d1…dk

Hex 1B 2A m nL n H d1…dk

Decimal 27 42 m nL n H d1…dk

[Range] m = 0, 1, 32, 33

$1 \le (nL + nH \times 256) \le 2047$ $(0 \le nL \le 255, 0 \le nH \le 7)$

$0 \le d \le 255$

$k = nL + nH \times 256$ [when $m = 0, 1$]

$k = (nL + nH \times 256) \times 3$ [when $m = 32, 33$]

[Description] • Stores the bit image data in the print buffer using the bit image mode specified by m.

m	Bit image mode	Vertical direction	Horizontal direction
0	8-dot single-density	60dip	101dip
1	8-dot double-density	68dip	203dip
32	24-dot single-density	203dip	101dip
33	24-dot double-density	203dip	203dip

- nL, nH specify the number of dots of the image data in the horizontal direction as $(nL + nH \times 256)$.
- d specifies the bit image data (column format).

ESC – n

[Name] Turn underline mode on/off

[Format] ASCII ESC – n

Hex 1B 2D n

Decimal 27 45 n

[Range] $0 \le n \le 2, 48 \le n \le 50$

[Default] $n = 0$

[Description] • Turns underline mode on or off.

n	Function
0, 48	Turns off underline mode.
1, 49	Turns on underline mode, set at 1-dot width.
2, 50	Turns on underline mode, set at 2-dot width.

ESC 2

[Name] Select default line spacing

[Format] ASCII ESC 2

Hex 1B 32

Decimal 27 50

[Description] • Sets the line spacing to approximately 3.75 mm {1/6"}.

ESC 3 n

[Name] Set line spacing

[Format] ASCII ESC 3 n

Hex 1B 33 n

Decimal 27 51 n

[Range] 0 ≤ n ≤ 255

[Default] Equivalent to approximately 4.23 mm {1/6"}.

[Description] • Sets the line spacing to [n × (vertical or horizontal motion unit)].

[Note] • The maximum is 1016 mm {40"}.

ESC = n

[Name] Select peripheral device

[Format] ASCII ESC = n

Hex 1B 3D n

Decimal 27 61 n

[Range] 0 ≤ n ≤ 255

[Default] n = 1

[Description] • Selects the device to which the host computer transmits data.

n	Function
1, 3	Enables printer.
2	Disables printer.

- When the printer is disabled (n = 2), all data except this command and the real-time commands are ignored.

ESC ? n

[Name] Cancel user-defined characters

[Format] ASCII ESC ? n

Hex 1B 3F n

Decimal 27 63 n

[Range] 32 ≤ n ≤ 126

[Description] • Deletes the user-defined character pattern specified by character code n .

ESC @

[Name] Initialize printer

[Format] ASCII ESC @

Hex 1B 40

Decimal 27 64

[Description] • Clears the data in the print buffer and resets the printer modes to the modes that were in effect when the power was turned on.

Keeps the following data:

- Macro definition data.
- Contents stored in the NV user memory.
- Contents defined for the NV graphics (NV bit image).
- Maintenance counter value.
- Setting value specified with GS (E .

ESC D n1...nk NUL

[Name] Set horizontal tab positions

[Format] ASCII ESC D n1...nk NUL

Hex 1B 44 n1...nk 00

Decimal 27 68 n1...nk 0

[Range] 1 ≤ n1 ≤ n2 ≤ ... ≤ nk ≤ 255

0 ≤ k ≤ 32

[Default] n = 8, 16, 24, 32, 40, ..., 232, 240, 248

[for Font A (12 × 24) in a standard character size width]

[Description]
- Sets horizontal tab positions.
- n specifies the number of digits from the setting position to the left edge of the print area.
- k is used to indicate the number of bytes set for the horizontal tab position.

ESC E n

[Name] Turn emphasized mode on/off

[Format] ASCII ESC E n

Hex 1B 45 n

Decimal 27 69 n

[Range] 0 ≤ n ≤ 255

[Default] n = 0

[Description]
- Turns emphasized mode on or off.
- When the LSB of n is 0, turns off emphasized mode.
- When the LSB of n is 1, turns on emphasized mode.

ESC G n

[Name] Turn double-strike mode on/off

[Format] ASCII ESC G n

Hex 1B 47 n

Decimal 27 71 n

[Range] 0 ≤ n ≤ 255

[Default] n = 0

[Description] • Turns double-strike mode on or off.

• When the LSB of n is 0, turns off double-strike mode.

• When the LSB of n is 1, turns on double-strike mode.

ESC J n

[Name] Print and feed paper

[Format] ASCII ESC J n

Hex 1B 4A n

Decimal 27 74 n

[Range] 0 ≤ n ≤ 255

[Description] • Prints the data in the print buffer and feeds the paper [n × (vertical or horizontal motion unit)].

[Note] • The maximum paper feed amount is 1016 mm {40"}.

ESC L

[Name] Select page mode

[Format] ASCII ESC L

Hex 1B 4C

Decimal 27 76

[Description] • Switches from standard mode to page mode.

ESC M n

[Name] Select character font

[Format] ASCII ESC M n

Hex 1B 4D n

Decimal 27 77 n

[Range] n = 0, 1, 48, 49

[Default] n = 0

[Description] • Selects a character font.

n	Character font
0, 48	Character font A (12 × 24)
1, 49	Character font B (9 × 17)

ESC R n

[Name] Select an international character set

[Format] ASCII ESC R n

Hex 1B 52 n

Decimal 27 82 n

[Range] 0 ≤ n ≤ 15

[Default] n = 0 [Other than the following models]

n = 15 [Simplified Chinese model]

[Description] • Selects an international character set.

n	International character set
0	U.S.A.
1	France
2	Germany
3	U.K.
4	Denmark I
5	Sweden
6	Italy
7	Spain I
8	Japan
9	Norway
10	Denmark II
11	Spain II
12	Latin America
13	Korea
14	Slovenia / Croatia
15	China

[Reference] " Inter national Character Sets"

ESC S

[Name] Select standard mode

[Format] ASCII ESC S

Hex 1B 53

Decimal 27 83

[Description] • Switches from page mode to standard mode.

ESC T n

[Name] Select print direction in page mode

[Format] ASCII ESC T n

Hex 1B 54 n

Decimal 27 84 n

[Range] 0 ≤ n ≤ 3, 48 ≤ n ≤ 51

[Default] n = 0

[Description] • In page mode, selects the print direction and starting position.

n	Print direction	Starting position
0, 48	Left to right	Upper left
1, 49	Bottom to top	Lower left
2, 50	Right to left	Lower right
3, 51	Top to bottom	Upper right

ESC V n

[Name] Turn 90 ° clockwise rotation mode on/off

[Format] ASCII ESC V n

Hex 1B 56 n

Decimal 27 86 n

[Range] 0 ≤ n ≤ 2, 48 ≤ n ≤ 50

[Default] n = 0

[Description] • In standard mode, turns 90° clockwise rotation mode on or off for characters.

n	Function
0, 48	Turns off 90° clockwise rotation mode.
1, 49 2, 50	Turns on 90° clockwise rotation mode.

ESC W xL x H y L y H dx L dx H dy L dy H

[Name] Set print area in page mode

[Format] ASCII ESC W x L x H y L y H dxL dxH dyL dyH

Hex 1B 57 x L x H y L y H dxL dxH dyL dyH

Decimal 27 87 x L x H y L y H dxL dxH dyL dyH

[Range] 0 ≤ (x L + x H × 256) ≤ 65535 (0 ≤ x L ≤ 255, 0 ≤ x H ≤ 255)

0 ≤ (y L + y H × 256) ≤ 65535 (0 ≤ y L ≤ 255, 0 ≤ y H ≤ 255)

1 ≤ (dxL + dxH × 256) ≤ 65535 (0 ≤ dxL ≤ 255, 0 ≤ dxH ≤ 255)

1 ≤ (dyL + dyH × 256) ≤ 65535 (0 ≤ dyL ≤ 255, 0 ≤ dyH ≤ 255)

[Default] (x L + x H × 256) = 0 (x L = 0, x H = 0)

(y L + y H × 256) = 0 (y L = 0, y H = 0)

(dxL + dxH × 256) = 512 (dxL = 0, dxH = 2) [80 mm paper width model]

(dxL + dxH × 256) = 360 (dxL = 104, dxH = 4) [58 mm paper width model]

(dyL + dyH × 256) = 1662 (dyL = 126, dyH = 6)

[Description]
- In page mode, sets the size and the logical origin of the print area.
- x L , x H specify the horizontal logical origin as [(x L + x H × 256) × (horizontal motion unit)] from absolute origin.
- y L , y H specify the vertical logical origin as [(y L + y H × 256) × (vertical motion unit)] from absolute origin.
- dxL , dxH specify the horizontal dimension of print area as [(dxL + dxH × 256) × (horizontal motion unit)].
- dyL , dyH specify the vertical dimension of print area as [(dyL + dyH × 256) × (vertical motion unit)].

[Note]
- When single-color print control is selected, the vertical dimension of the print area can be set to 207.95 mm {3324/406"} maximum.

ESC \ nL n H

[Name] Set relative print position

[Format] ASCII ESC \ n L n H

Hex 1B 5C n L n H

Decimal 27 92 n L n H

[Range] -32768 ≤ (n L + n H × 256) ≤ 32767

[Description]
- Moves the print position to [(n L + n H × 256) × (horizontal or vertical motion unit)] from the current position.
- A positive number specifies movement to the right, and a negative number specifies movement to the left.

ESC a n

[Name] Select justification

[Format] ASCII ESC a n

Hex 1B 61 n

Decimal 27 97 n

[Range] 0 ≤ n ≤ 2, 48 ≤ n ≤ 50

[Default] n = 0

[Description] • In standard mode, aligns all the data in one line to the selected layout.

n	Justification
0, 48	Left justification
1, 49	Centering
2, 50	Right justification

ESC c 3 n

[Name] Select paper sensor(s) to output paper-end signals

[Format] ASCII ESC c 3 n

Hex 1B 63 33 n

Decimal 27 99 51 n

[Range] 0 ≤ n ≤ 255

[Default] n = 0 [when DIP switch [SW 1-3] is on.]

n = 15 [when DIP switch [SW 1-3] is off.]

[Description] • Selects wether the paper sensor(s) to output paper end signals or not when a paper end is detected.

(*n*) Bit	Off/On	Hex	Decimal	Function
0	Off	00	0	Disables roll paper near-end sensor.
	On	01	1	Enables roll paper near-end sensor.
1	Off	00	0	Disables roll paper near-end sensor.
	On	02	2	Enables roll paper near-end sensor.
2	Off	00	0	Disables roll paper end sensor (paper sensor).
	On	04	4	Enables roll paper end sensor (paper sensor).
3	Off	00	0	Disables roll paper end sensor (paper sensor).
	On	08	8	Enables roll paper end sensor (paper sensor).
4 - 7	Off	00	0	Reserved.

[Note] • This command is enabled only with a parallel interface model.

ESC c 4 n

[Name] Select paper sensor(s) to stop printing

[Format] ASCII ESC c 4 n

Hex 1B 63 34 n

Decimal 27 99 52 n

[Range] 0 ≤ n ≤ 255

[Default] n = 0

[Description] • Selects the paper sensor(s) whether to us e to stop printing or not when a paper end is detected.

(*n*) Bit	Off/On	Hex	Decimal	Function
0	Off	00	0	Roll paper near-end sensor disabled.
	On	01	1	Roll paper near-end sensor enabled.
1	Off	00	0	Roll paper near-end sensor disabled.
	On	02	2	Roll paper near-end sensor enabled.
2 - 7	Off	00	0	Reserved.

ESC c 5 n

[Name] Enable/disable panel buttons

[Format] ASCII ESC c 5 n

Hex 1B 63 35 n

Decimal 27 99 53 n

[Range] 0 ≤ n ≤ 255

[Default] n = 0

[Description] • Enables or disables the panel buttons.

• When the LSB of n is 0, the panel buttons are enabled.

• When the LSB of n is 1, the panel buttons are disabled.

[Notes] • This command affects the FEED button.

• The FEED button is disabled regardless of the settings with this command, when the cover is open.

ESC d n

[Name] Print and feed n lines

[Format] ASCII ESC d n

Hex 1B 64 n

Decimal 27 100 n

[Range] 0 ≤ n ≤ 255

[Description] • Prints the data in the print buffer and feeds the paper [n × (current line spacing)].

[Note] • The maximum paper feed amount is 1016 mm {40"}.

ESC p m t1 t2

[Name] Generate pulse

[Format] ASCII ESC p m t1 t2

Hex 1B 70 m t1 t2

Decimal 27 112 m t1 t2

[Range] m = 0, 1, 48, 49

0 ≤ t1 ≤ 255

0 ≤ t2 ≤ 255

[Description] • Outputs the pulse specified by t1 and t2 to connector pin m.

m	Connector pin
0, 48	Drawer kick-out connector pin 2.
1, 49	Drawer kick-out connector pin 5.

- t1 specifies the pulse on time as [t1 × 2 ms].
- t2 specifies the pulse off time as [t2 × 2 ms].

[Note] • Specify a value (t1 < t2) so that the off time is longer than the on time.

ESC t n

[Name] Select character code table

[Format] ASCII ESC t n

Hex 1B 74 n

Decimal 27 116 n

[Range] 0≤n≤5; 13≤n≤21;n=26; 32≤n≤34;n=36,37; 39≤n≤40; 45≤n≤52

[Default] n = 0

[Description] • Selects page n from the character code table.

n	Character Code table
0	[PC437 (USA: Standard Europe)]
1	[Katakana]
2	[PC850 (Multilingual)]
3	[PC860 (Portuguese)]
4	[PC863 (Canadian-French)
5	[PC865 (Nordic)]
13	[PC857 (Turkish)]
14	[PC737 (Greek)]
15	[ISO8859-7 (Greek)]
16	[WPC1252]
17	[PC866 (Cyrillic #2)]

18	[PC852 (Latin 2)]
19	[PC858 (Euro)]
20	[KU42]
21	[TIS11 (Thai)]
26	[TIS18 (Thai)]
32	[PC720]]
33	[WPC775]
34	[PC855 (Cyrillic)]
36	[PC862 (Hebrew)]
37	[PC864 (Arabic)]
39	[ISO8859-2 (Latin2)]
40	[ISO8859-15 (Latin9)]
45	[WPC1250]
46	[WPC1251(Cyrillic)]
47	[WPC1253]
48	[WPC1254]
49	[WPC1255]
50	[WPC1256]
51	[WPC1257]
52	[WPC1258]

[Notes] Page 0/page 2/page 3/page 4/page 5/ page 14/page 17/ page 18/ page 19/ page 20/ page 21/ page 26/ page 32 /page 47 supports both 12 x 24 fonts and 9 x 17 fonts。

[Reference] " Appendix A"

ESC { n

[Name] Turn upside-down print mode on/off

[Format] ASCII ESC { n

Hex 1B 7B n

Decimal 27 123 n

[Range] 0 ≤ n ≤ 255

[Default] n = 0

[Description] • In standard mode, turns upside-down print mode on or off.

• When the LSB of n is 0, turns off upside-down print mode.

• When the LSB of n is 1, turns on upside-down print mode.

FS g 1 m a1 a2 a3 a4 nL n H d1…dk

[Name] Write to NV user memory

[Format] ASCII FS g 1 m a1 a2 a3 a4 n L n H d1...dk

Hex 1C 67 31 m a1 a2 a3 a4 n L n H d1...dk

Decimal 28 103 49 m a1 a2 a3 a4 n L n H d1...dk

[Range] m = 0

0 ≤ (a1 + a2 × 256 + a3 × 65536 + a4 × 16777216) ≤ 1023

(0 ≤ a1 ≤ 255, 0 ≤ a2 ≤ 3, a3 = 0, a4 = 0)

1 ≤ (n L + n H × 256) ≤ 1024 (0 ≤ n L ≤ 255, 0 ≤ n H ≤ 4)

32 ≤ d ≤ 255

k = (n L + n H × 256)

The entire capacity size = 1KB.

[Description] • Stores the data (d1...dk) in the area from (a1 + a2 × 256 + a3 × 65536 + a4 × 16777216) to (n L + n H × 256) bytes in the NV user memory.

[Notes] • Frequent write command executions by an NV memory write command may damage the NV memory. Therefore, it is recommended to limit writing the commands into the NV memory to less than 10 times a day.

• If the power is turned off or the printer is reset via an interface while this command is being executed, the printer may go into an abnormal condition. Be careful not to turn

the power off or let the printer be reset via an interface while this command is being executed.

- While processing this command, the printer may become BUSY while writing the data to the NV memory and stops receiving data. Therefore, be sure not to transmit data, including the real-time commands while the printer is BUSY.

FS g 2 m a1 a2 a3 a4 nL n H

[Name] Read from NV user memory

[Format] ASCII FS g 2 m a1 a2 a3 a4 n L n H

Hex 1C 67 32 m a1 a2 a3 a4 n L n H

Decimal 28 103 50 m a1 a2 a3 a4 n L n H

[Range] m = 0

$0 \le (a1 + a2 \times 256 + a3 \times 65536 + a4 \times 16777216) \le 1023$

$(0 \le a1 \le 255, 0 \le a2 \le 3, a3 = 0, a4 = 0)$

$1 \le (nL + nH \times 256) \le 80 \quad (1 \le nL \le 80, nH = 0)$

[Description] • Transmits the data in the area from (a1 + a2 × 256 + a3 × 65536 + a4 × 16777216) to (n L + n H × 256) bytes in the NV user memory.

[Note] • When this command is transmitted, do not transmit the subsequent data until the status is received.

GS ! n

[Name] Select character size

[Format] ASCII GS ! n

Hex 1D 21 n

Decimal 29 33 n

[Range] $0 \le n \le 7, 16 \le n \le 23, 32 \le n \le 39, 48 \le n \le 55, 64 \le n \le 71,$

$80 \le n \le 87, 96 \le n \le 103, 112 \le n \le 119$

(1 ≤ Enlargement in vertical direction ≤ 8, 1 ≤ Enlargement in horizontal direction ≤ 8)

[Default] n = 0

[Description] • Selects character size (height magnification and width magnification).

(*n*) Bit	Off/On	Hex	Decimal	Function
0 - 2	See table [Height magnification].			Selects the height magnification.
3	Off	00	0	Reserved.
4 - 6	See table [Width magnification].			Selects the width magnification.
7	Off	00	0	Reserved.

[Height magnification]

Hex	Decimal	Enlargement
00	0	1 time (standard)
01	1	2 times
02	2	3 times
03	3	4 times
04	4	5 times
05	5	6 times
06	6	7 times
07	7	8 times

[Width magnification]

Hex	Decimal	Enlargement
00	0	1 time (standard)
10	16	2 times
20	32	3 times
30	48	4 times
40	64	5 times
50	80	6 times
60	96	7 times
70	112	8 times

GS $ nL n H

[Name] Set absolute vertical print position in page mode

[Format] ASCII GS $ n L n H

Hex 1D 24 n L n H

Decimal 29 36 n L n H

[Range] 0 ≤ (n L + n H × 256) ≤ 65535 (0 ≤ n L ≤ 255, 0 ≤ n H ≤ 255)

[Description] • In page mode, moves the vertical print position to [(n L + n H × 256) × (vertical or horizontal motion unit)] from the starting position set with ESC T .

GS (A pL p H n m

[Name] Execute test print

[Format] ASCII GS (A p L p H n m

Hex 1D 28 41 p L p H n m

Decimal 29 40 65 p L p H n m

[Range] (p L + p H × 256) = 2 (p L = 2, p H = 0)

0 ≤ n ≤ 2, 48 ≤ n ≤ 50

1 ≤ m ≤ 3, 49 ≤ m ≤ 51

[Description] • Executes a specified test print.

• p L , p H specify (p L + p H × 256) as the number of bytes after p H (n and m).

• n specifies the paper used for the test print.

n	Paper source
0, 48	Basic sheet (roll paper)
1, 49 2, 50	Roll paper

• *m* specifies a test pattern.

m	Test pattern
1, 49	Hexadecimal dump print
2, 50	Printer status print
3, 51	Rolling pattern print

[Notes] • The printer executes a software reset after processing this command.

• Clears the receive and print buffers.

• Resets all setting values in RAM (the print area, the character styles, and others) that were in effect at power on. (The data in the NV memory is not reset.)

GS (D pL p H m [a1 b1]...[ak bk]

[Name] Enable/disable real-time command

[Format] ASCII GS (D p L p H m [a1 b1]...[ak bk]

Hex 1D 28 44 p L p H m [a1 b1]...[ak bk]

Decimal 29 40 68 p L p H m [a1 b1]...[ak bk]

[Range] 3 ≤ (p L + p H × 256) ≤ 65535 (0 ≤ p L ≤ 255, 0 ≤ p H ≤ 255)

m = 20

a = 1, 2

b = 0, 1, 48, 49

[Default] b = 1 [when a = 1]

b = 0 [when a = 2]

[Description] • Enables or disables the real-time command specified by a .

• p L , p H specify (p L + p H × 256) as the number of bytes after p H (m and [a1 b1]...[ak bk]).

a	*b*	Function
1	0, 48	**DLE DC4 *fn m t*** (*fn* = 1): Not processed (disabled).
	1, 49	**DLE DC4 *fn m t*** (*fn* = 1): Processed (enabled).
2	0, 48	**DLE DC4 *fn a b*** (*fn* = 2): Not processed (disabled).
	1, 49	**DLE DC4 *fn a b*** (*fn* = 2): Processed (enabled).

[Note] • If graphics data includes a data string matching DLE DC4 (fn = 1 or 2), it is recommended to use this command in advance to disable the real-time commands.

GS (L pL p H m fn [parameters]

GS 8 L p1 p2 p3 p4 m fn [parameters]

[Name] Set graphics data

[Format] ASCII GS (L p L p H m fn [parameters]

Hex 1D 28 4C p L p H m fn [parameters]

Decimal 29 40 76 p L p H m fn [parameters]

ASCII GS 8 L p1 p2 p3 p4 m fn [parameters]

Hex 1D 38 4C p1 p2 p3 p4 m fn [parameters]

Decimal 29 56 76 p1 p2 p3 p4 m fn [parameters]

- In the description below, only GS (L is used for explanation.
- Note that GS (L and GS 8 L have the same function.
- If the [parameters] in the Format column in the table below exceed 65533 bytes, use GS 8 L.
- The only differences between GS (L and GS 8 L are as listed below. The format for GS 8 L is not provided in the following descriptions; however, [Range], [Default], [Description], and [Notes] for parameters other than those listed in the table below are the same as for GS (L .

<Parameters specifying the number of parameters after p H or p4>

Command	Parameters	Structure	Maximum value
GS (L	*pL, pH*	2 bytes	65,535
GS 8 L	*p1, p2, p3, p4*	4 bytes	4,294,967,295

[Description] • Processes graphics data.

• p L , p H specify (p L + p H × 256) as the number of bytes after p H (m, fn , and [parameters]).

• fn specifies the function.

• [parameters] specify the process of each function.

fn	Format	Function No.	Function name
0, 48	**GS (L *pL pH m fn***	48	Transmit the NV graphics memory capacity
2, 50	**GS (L *pL pH m fn***	50	Print the graphics data in the print buffer
3, 51	**GS (L *pL pH m fn***	51	Transmit the remaining capacity of the NV graphics memory
64	**GS (L *pL pH m fn d1 d2***	64	Transmit the key code list for defined NV graphics
65	**GS (L *pL pH m fn d1 d2 d3***	65	Delete all NV graphics data
66	**GS (L *pL pH m fn kc1 kc2***	66	Delete the specified NV graphics data
67	**GS (L *pL pH m fn a kc1 kc2 b xL xH yL yH [c d1...dk]1... [c d1...dk]b***	67	Define the NV graphics data (raster format)
69	**GS (L *pL pH m fn kc1 kc2 x y***	69	Print the specified NV graphics data
112	**GS (L *pL pH m fn a bx by c xL xH yL yH d1...dk***	112	Store the graphics data in the print buffer (raster format)

[Notes] • Frequent write command executions by an NV memory write command may damage the NV memory. Therefore, it is recommended to limit writing the commands into the NV memory to less than 10 times a day.

• If the power is turned off or the printer is reset via an interface while this command is being executed, the printer may go into an abnormal condition. Be careful not to turn the power off or let the printer be reset via an interface while this command is being executed.

• While processing this command, the printer is BUSY while writing the data to the NV memory and stops receiving data. Therefore, be sure not to transmit data, including the real-time commands, while the printer is BUSY.

• When <Function 48, 51, or 64> is transmitted, do not transmit the subsequent data until the status is received. ESC/POS Handshaking Protocol procedures is required when using <Function 64>.

<Function 48> GS (L p L p H m fn (fn = 0, 48)

[Name] Transmit the NV graphics memory capacity

[Format] ASCII GS (L p L p H m fn

Hex 1D 28 4C p L p H m fn

Decimal 29 40 76 p L p H m fn

[Range] (p L + p H × 256) = 2 (p L = 2, p H = 0)

m = 48

fn = 0, 48

[Description] • Transmits the entire capacity of the NV graphics area (number of bytes in the NV graphics area).

<Function 50> GS (L pL p H m fn (fn = 2, 50)

[Name] Print the graphics data in the print buffer

[Format] ASCII GS (L p L p H m fn

Hex 1D 28 4C p L p H m fn

Decimal 29 40 76 p L p H m fn

[Range] (p L + p H × 256) = 2 (p L = 2, p H = 0)

m = 48

fn = 2, 50

[Description] • Prints the buffered graphics data stored by processing of GS (L <Function 112>.

<Function 51> GS (L pL p H m fn (fn = 3, 51)

[Name] Transmit the remaining c apacity of the NV graphics memory

[Format] ASCII GS (L p L p H m fn

Hex 1D 28 4C p L p H m fn

Decimal 29 40 76 p L p H m fn

[Range] (p L + p H × 256) = 2 (p L = 2, p H = 0)

m = 48

fn = 3, 51

[Description] • Transmits the number of bytes of remaining memory (unused area) in the NV graphics area.

<Function 64> GS (L pL p H m fn d1 d2 (fn = 64)

[Name] Transmit the key code list for defined NV graphics

[Format] ASCII GS (L p L p H m fn d1 d2

Hex 1D 28 4C p L p H m fn d1 d2

Decimal 29 40 76 p L p H m fn d1 d2

[Range] (p L + p H × 256) = 4 (p L = 4, p H = 0)

m = 48

fn = 64

d1 = 75

d2 = 67

[Description] • Transmits the key code list for defined NV graphics.

<Function 65> GS (L pL p H m fn d1 d2 d3 (fn = 65)

[Name] Delete all NV graphics data

[Format] ASCII GS (L p L p H m fn d1 d2 d3

Hex 1D 28 4C p L p H m fn d1 d2 d3

Decimal 29 40 76 p L p H m fn d1 d2 d3

[Range] (p L + p H × 256) = 5 (p L = 5, p H = 0)

m = 48

fn = 65

d1 = 67

d2 = 76

d3 = 82

[Description] • Deletes all NV graphics data.

<Function 66> GS (L pL p H m fn kc1 kc2 (fn = 66)

[Name] Delete the specified NV graphics data

[Format] ASCII GS (L p L p H m fn kc1 kc2

Hex 1D 28 4C p L p H m fn kc1 kc2

Decimal 29 40 76 p L p H m fn kc1 kc2

[Range] (p L + p H × 256) = 4 (p L = 4, p H = 0)

m = 48

fn = 66

32 ≤ kc1 ≤ 126

32 ≤ kc2 ≤ 126

[Description] • Deletes the NV graphics data defined by the key codes (kc1 and kc2).

<Function 67> GS (L pL p H m fn a kc1 kc2 b x L x H y L y H [c d1…dk]1…[c d1….dk]b (fn = 67)

[Name] Define the NV graphics data (raster format)

[Format] ASCII GS (L p L p H m fn a kc1 kc2 b x L x H y L y H [c d1...dk]1...[c d1...dk]b

Hex 1D 28 4C p L p H m fn a kc1 kc2 b x L x H y L y H [c d1...dk]1...[c d1...dk]b

Decimal 29 40 76 p L p H m fn a kc1 kc2 b x L x H y L y H [c d1...dk]1...[c d1...dk]b

[Range] (p L , p H) for GS (L :

12 ≤ (p L + p H × 256) ≤ 65535 (0 ≤ p L ≤ 255, 0 ≤ p H ≤ 255)

(p1, p2, p3, p4) for GS 8 L:

12 ≤ (p1 + p2 × 256 + p3 × 65536 + p4 × 16777216) ≤ 4294967295

(0 ≤ p1 ≤ 255, 0 ≤ p2 ≤ 255, 0 ≤ p3 ≤ 255, 0 ≤ p4 ≤ 255)

Common parameters for GS (L and GS 8 L:

m = 48

fn = 67

a = 48

$32 \leq kc1 \leq 126$

$32 \leq kc2 \leq 126$

$b = 1$ [when single-color print control is selected]

$1 \leq (xL + xH \times 256) \leq 8192$ $(0 \leq xL \leq 255, 0 \leq xH \leq 32)$

$1 \leq (yL + yH \times 256) \leq 2304$ $(0 \leq yL \leq 255, 0 \leq yH \leq 9)$

$c = 49$ [when single-color print control is selected]

$0 \leq d \leq 255$

$k = (\text{int}((xL + xH \times 256) + 7) / 8) \times (yL + yH \times 256)$

The entire capacity size = 256 KB maximum.

[Description]
- Defines the NV graphics data (raster format) as a record specified by the key codes (kc1 , kc2) in the NV graphics area.
- b specifies the number of the color of the defined data.
- x L , x H specify the number of dots in the horizontal direction as (x L + x H ×256).
- y L , y H specify the number of dots in the vertical direction as (y L + y H × 256).
- c specifies the color of the defined data.

c	Defined data color (*)
49	Color 1

(*) Color 1 means black (a high level of energy) in the specified two-color thermal paper.

- d specifies the defined data (raster format).

[Notes]
- In cases where there is sufficient capacity is not available for storing NV graphics data specified by (x L + x H × 256) and (y L + y H × 256), this function is ignored.
- The number of items of NV graphics registered should be within 50 to shorten the execution time of this function. The execution time is 60 seconds or less when the number of items registered is within 50. The execution time for 100 items is 120 seconds or less.
- The [data value (k) + control information data value (24 bytes)] area of the NV graphics data domain is used when this function is executed.

- NV graphics and NV bit image (FS q) cannot be defined simultaneously. When this function is executed, all NV bit images are deleted.

<Function 69> GS (L p L p H m fn kc1 kc2 x y (fn = 69)

[Name] Print the specified NV graphics data

[Format] ASCII GS (L p L p H m fn kc1 kc2 x y

Hex 1D 28 4C p L p H m fn kc1 kc2 x y

Decimal 29 40 76 p L p H m fn kc1 kc2 x y

[Range] (p L + p H × 256) = 6 (p L = 6, p H = 0)

m = 48

fn = 69

32 ≤ kc1 ≤ 126

32 ≤ kc2 ≤ 126

x = 1, 2

y = 1, 2

[Description] • Prints the NV graphics data defined by the key codes (kc1 and kc2).

• The graphics data is enlarged by x and y in the horizontal and vertical directions.

x,y	Vertical direction	Horizontal direction
1	203dip	203dip
2	101dip	101dip

<Function 112> GS (L pL p H m fn a bx by c x L x H y L y H d1...dk (fn = 112)

[Name] Store the graphics data in the print buffer (raster format)

[Format] ASCII GS (L p L p H m fn a bx by c xL x H y L y H d1...dk

Hex 1D 28 4C p L p H m fn a bx by c xL x H y L y H d1...dk

Decimal 29 40 76 p L p H m fn a bx by c xL x H y L y H d1...dk

[Range] (p L , p H) for GS (L :

$11 \le (pL + pH \times 256) \le 65535$ $(0 \le pL \le 255, 0 \le pH \le 255)$

(p1, p2, p3, p4) for GS 8 L:

$11 \le (p1 + p2 \times 256 + p3 \times 65536 + p4 \times 16777216) \le 4294967295$

$(0 \le p1 \le 255, 0 \le p2 \le 255, 0 \le p3 \le 255, 0 \le p4 \le 255)$

Common parameters for GS (L and GS 8 L:

m = 48

fn = 112

a = 48

bx = 1, 2

by = 1, 2

c = 49 [when single-color print control is selected]

$1 \le (xL + xH \times 256) \le 2047$ $(0 \le xL \le 255, 0 \le xH \le 7)$

When single-color print control is selected

$1 \le (yL + yH \times 256) \le 1662$ $(0 \le yL \le 255, 0 \le yH \le 6)$ [when by=1]

$0 \le d \le 255$

$k = (\text{int}((xL + xH \times 256) + 7) / 8) \times (yL + yH \times 256)$

[Description] • Stores the graphics data (raster format) in the print buffer.

• The graphics data is enlarged by bx and by in the horizontal and vertical directions.

bx,by	Vertical direction	Horizontal direction
1	203dpi	203dpi
2	101dpi	101dpi

(*) Color 1 means black (a high level of energy) in the specified two-color thermal paper.

- x L , x H specify the number of dots in the horizontal direction as (x L + x H × 256).
- y L , y H specify the number of dots in the vertical direction as (y L + y H × 256).
- d specifies the stored data (raster format).

GS (k pL p H cn fn [parameters]

[Name] Set up and print symbol

[Description]
- Processes the data for symbols.
- p L , p H specify (p L + p H × 256) as the number of bytes after p H (cn, fn , and [parameters]).
- cn specifies the type of symbol.
- fn specifies the function.
- [parameters] specify the process of each function

cn	Type of Symbol
48	PDF417 (two-dimensional codes)
49	QR Code (two-dimensional codes)

cn	*fn*	Format	Function No.	Function name
48	65	**GS (k *pL pH cn fn n***	065	PDF417: Set the number of columns in the data region.
	66	**GS (k *pL pH cn fn n***	066	PDF417: Set the number of rows.
	67	**GS (k *pL pH cn fn n***	067	PDF417: Set the width of the module.
	68	**GS (k *pL pH cn fn n***	068	PDF417: Set the row height.
	69	**GS (k *pL pH cn fn m n***	069	PDF417: Set the error correction level.
	70	**GS (k *pL pH cn fn m***	070	PDF417: Select the options.
	80	**GS (k *pL pH cn fn m d1...dk***	080	PDF417: Store the data in the symbol storage area.
	81	**GS (k *pL pH cn fn m***	081	PDF417: Print the symbol data in the symbol storage area.
	82	**GS (k *pL pH cn fn m***	082	PDF417: Transmit the size information of the symbol data in the symbol storage area.
49	65	**GS (k *pL pH cn fn n1 n2***	165	QR Code: Select the model.
	67	**GS (k *pL pH cn fn n***	167	QR Code: Set the size of module.
	69	**GS (k *pL pH cn fn n***	169	QR Code: Select the error correction level.
	80	**GS (k *pL pH cn fn m d1...dk***	180	QR Code: Store the data into the symbol storage area.
	81	**GS (k *pL pH cn fn m***	181	QR Code: Print the symbol data in the symbol storage area.
	82	**GS (k *pL pH cn fn m***	182	QR Code: Transmit the size information of the symbol data in the symbol storage area.

- "Symbol data" means the data received with <Function 080 or 180> before encoding.
- "Symbol storage area" means the area w here the data received with <Function

080 or 180> before encoding is stored.

[Notes] • When <Function 082 or 182> is transmitted, do not transmit the subsequent data until the status is received.

• PDF417 (cn=48) is supported in ANK model.

[Reference] APPENDIX H, APPENDIX I

<Function 065> GS (k pL p H cn fn n (cn = 48, fn = 65)

[Name] PDF417: Set the number of columns in the data region

[Format] ASCII GS (k p L p H cn fn n

Hex 1D 28 6B p L p H cn fn n

Decimal 29 40 107 p L p H cn fn n

[Range] (p L + p H × 256) = 3 (p L = 3, p H = 0)

cn = 48

fn = 65

0 ≤ n ≤ 30

[Default] n = 0

[Description] • Sets the number of columns in the data region for PDF417.

• When n = 0, specifies automatic processing. In this case, the number of columns in the data region is calculated from the number of codewords or the range of the print area.

• When n ≠ 0, sets the number of columns in the data region to n codewords:

[Notes] • The following data is not included in the number of columns.

• Start pattern and stop pattern

• Left-row indicator codewords and right-row indicator codewords

<Function 066> GS (k pL p H cn fn n (cn = 48, fn = 66)

[Name] PDF417: Set the number of rows

[Format] ASCII GS (k p L p H cn fn n

Hex 1D 28 6B p L p H cn fn n

Decimal 29 40 107 p L p H cn fn n

[Range] (p L + p H × 256) = 3 (p L = 3, p H = 0)

cn = 48

fn = 66

n = 0, 3 ≤ n ≤ 90

[Default] n = 0

[Description] • Sets the number of rows for PDF417.

• When n = 0, specifies automatic processing. In this case, the number of rows in the data region is calculated from the number of codewords or the range of the print area.

• When n ≠ 0, sets the number of rows to n rows.

<Function 067> GS (k pL p H cn fn n (cn = 48, fn = 67)

[Name] PDF417: Set the width of the module

[Format] ASCII GS (k p L p H cn fn n

Hex 1D 28 6B p L p H cn fn n

Decimal 29 40 107 p L p H cn fn n

[Range] (p L + p H × 256) = 3 (p L = 3, p H = 0)

cn = 48

fn = 67

2 ≤ n ≤ 8

[Default] n = 3

[Description] • Sets the width of the module for PDF417 to n dots.

<Function 068> GS (k pL p H cn fn n (cn = 48, fn = 68)

[Name] PDF417: Set the row height

[Format] ASCII GS (k p L p H cn fn n

Hex 1D 28 6B p L p H cn fn n

Decimal 29 40 107 p L p H cn fn n

[Range] (p L + p H × 256) = 3 (p L = 3, p H = 0)

cn = 48

fn = 68

2 ≤ n ≤ 8

[Default] n = 3

[Description] • Sets the row height for PDF417 to [n × (the width of the module)].

<Function 069> GS (k pL p H cn fn m n (cn = 48, fn = 69)

[Name] PDF417: Set the error correction level

[Format] ASCII GS (k p L p H cn fn m n

Hex 1D 28 6B p L p H cn fn m n

Decimal 29 40 107 p L p H cn fn m n

[Range] (p L + p H × 256) = 4 (p L = 4, p H = 0)

cn = 48

fn = 69

m = 48, 49

48 ≤ n ≤ 56 [when m = 48]

1 ≤ n ≤ 40 [when m = 49]

[Default] m = 49, n = 1

[Description] • Sets the error correction level for PDF417.

• When m = 48, the error correction level is se t by the "Level Setting" and the error correction level set by "Ratio Setting" is canceled. The number of error correction codewords are as follows:

n	Function	Number of error correction codewords
48	Select error correction level 0	2
49	Select error correction level 1	4
50	Select error correction level 2	8
51	Select error correction level 3	16
52	Select error correction level 4	32
53	Select error correction level 5	64
54	Select error correction level 6	128
55	Select error correction level 7	256
56	Select error correction level 8	512

• When m = 49, the error correction level is set by the "Ratio Setting" to the level indicated by the number for encoded data, and the error correction level set by the "Level Setting" is canceled. The rate is set to [n × 10%].

The error correction levels in the following table are determined by the calculation [Data codeword × n × 0.1 = (A)] (Fractions of 0.5 and over are rounded up, and others are truncated.)

Result (A)	Use the error correction level	Number of error correction codeword
0 to 3	Error correction level 1	4
4 to 10	Error correction level 2	8
11 to 20	Error correction level 3	16
21 to 45	Error correction level 4	32
46 to 100	Error correction level 5	64
101 to 200	Error correction level 6	128
201 to 400	Error correction level 7	256
401 or more	Error correction level 8	512

<Function 070> GS (k pL p H cn fn m (cn = 48, fn = 70)

[Name] PDF417: Select the options

[Format] ASCII GS (k p L p H cn fn m

Hex 1D 28 6B p L p H cn fn m

Decimal 29 40 107 p L p H cn fn m

[Range] (p L + p H × 256) = 3 (p L = 3, p H = 0)

cn = 48

fn = 70

m = 0, 1

[Default] m = 0

[Description] • Selects the options for PDF417.

m	Function
0	Selects the standard PDF417.
1	Selects the truncated PDF417.

<Function 080> GS (k pL p H cn fn m d1 ...dk (cn = 48, fn = 80)

[Name] PDF417: Store the dat a in the symbol storage area

[Format] ASCII GS (k p L p H cn fn m d1…dk

Hex 1D 28 6B p L p H cn fn m d1…dk

Decimal 29 40 107 p L p H cn fn m d1…dk

[Range] 4 ≤ (p L + p H × 256) ≤ 65535 (0 ≤ p L ≤ 255, 0 ≤ p H ≤ 255)

cn = 48

fn = 80

m = 48

0 ≤ d ≤ 255

k = (p L + p H × 256) – 3

[Description] • Stores the PDF417 symbol data (d1...dk) in the symbol storage area.

<Function 081> GS (k pL p H cn fn m (cn = 48, fn = 81)

[Name] PDF417: Print the symbol data in the symbol storage area

[Format] ASCII GS (k p L p H cn fn m

Hex 1D 28 6B p L p H cn fn m

Decimal 29 40 107 p L p H cn fn m

[Range] (p L + p H × 256) = 3 (p L = 3, p H = 0)

cn = 48

fn = 81

m = 48

[Description] • Encodes and prints the PDF417 symbol data in the symbol storage area with GS (k <Function 080>.

[Notes] • User must secure the quiet zone (left, right, upward, and downward space areas defined by the PDF417 symbol specifications) for PDF417 printing.

• In standard mode, symbols higher than 831 dot s cannot be printed with this printer.

<Function 082> GS (k p L p H cn fn m (cn = 48, fn = 82)

[Name] PDF417: Transmit the size information of the symbol data in the symbol storage area

[Format] ASCII GS (k p L p H cn fn m

Hex 1D 28 6B p L p H cn fn m

Decimal 29 40 107 p L p H cn fn m

[Range] (p L + p H × 256) = 3 (p L = 3, p H = 0)

cn = 48

fn = 82

m = 48

[Description] • Transmits the size information for t he encoded PDF417 symbol data in the symbol storage area with GS (k <Function 080>.

[Notes] • This function does not print.

• The size information does not include the quiet zone (left, right, upward, and downward space areas defined by the PDF417 symbol specifications).

<Function 165> GS (k p L p H cn fn n1 n2 (cn = 49, fn = 65)

[Name] QR Code: Select the model

[Format] ASCII GS (k p L p H cn fn n1 n2

Hex 1D 28 6B p L p H cn fn n1 n2

Decimal 29 40 107 p L p H cn fn n1 n2

[Range] (p L + p H × 256) = 4 (p L = 4, p H = 0)

cn = 49

fn = 65

n1 = 49, 50

n2 = 0

[Default] n1 = 50, n2 = 0

[Description] • Selects the model for QR Code.

n1	Function
49	Selects model 1 conversion processing.
50	Selects model 2 conversion processing.

<Function 167> GS (k p L p H cn fn n (cn = 49, fn = 67)

[Name] QR Code: Set the size of module

[Format] ASCII GS (k p L p H cn fn n

Hex 1D 28 6B p L p H cn fn n

Decimal 29 40 107 p L p H cn fn n

[Range] (p L + p H × 256) = 3 (p L = 3, p H = 0)

cn = 49

fn = 67

1 ≤ n ≤ 16

[Default] n = 3

[Description] • Sets the size of the module for QR Code to n dots.

<Function 169> GS (k p L p H cn fn n (cn = 49, fn = 69)

[Name] QR Code: Select the error correction level

[Format] ASCII GS (k p L p H cn fn n

Hex 1D 28 6B p L p H cn fn n

Decimal 29 40 107 p L p H cn fn n

[Range] (p L + p H × 256) = 3 (p L = 3, p H = 0)

cn = 49

fn = 69

48 ≤ n ≤ 51

[Default] n = 48

[Description] • Selects the error correction level for QR Code.

n	Function	Reference: Approx. figure of recovery
48	Select error correction level L	7 %
49	Select error correction level M	15 %
50	Select error correction level Q	25 %
51	Select error correction level H	30 %

<Function 180> GS (k pL p H cn fn m d1 ...dk (cn = 49, fn = 80)

[Name] QR Code: Store the dat a in the symbol storage area

[Format] ASCII GS (k p L p H cn fn m d1…dk

Hex 1D 28 6B p L p H cn fn m d1…dk

Decimal 29 40 107 p L p H cn fn m d1…dk

[Range] 4 ≤ (p L + p H × 256) ≤ 7092 (0 ≤ p L ≤ 255, 0 ≤ p H ≤ 27)

cn = 49

fn = 80

m = 48

0 ≤ d ≤ 255

k = (p L + p H × 256) – 3

[Description] • Stores the QR Code symbol data (d1...dk) into the symbol storage area.

<Function 181> GS (k pL p H cn fn m (cn = 49, fn = 81)

[Name] QR Code: Print the symbol data in the symbol storage area

[Format] ASCII GS (k p L p H cn fn m

Hex 1D 28 6B p L p H cn fn m

Decimal 29 40 107 p L p H cn fn m

[Range] (p L + p H × 256) = 3 (p L = 3, p H = 0)

cn = 49

fn = 81

m = 48

[Description] • Encodes and prints the QR Code symbol data in the symbol storage area with GS (k <Function 180>.

[Note] • User must secure the quiet zone (left, right, upward, and downward space areas defined by the QR Code symbol specifications) for QR Code printing.

<Function 182> GS (k p L p H cn fn m (cn = 49, fn = 82)

[Name] QR Code: Transmit the size information of the symbol data in the symbol storage area

[Format] ASCII GS (k p L p H cn fn m

Hex 1D 28 6B p L p H cn fn m

Decimal 29 40 107 p L p H cn fn m

[Range] (p L + p H × 256) = 3 (p L = 3, p H = 0)

cn = 49

fn = 82

m = 48

[Description] • Transmits the size information for the encoded QR Code symbol data in the symbol storage area with GS (k <Function 180>.

[Notes] • This function does not print data.

• The size information does not include the quiet zone (left, right, upward, and downward space areas defined by the QR Code symbol specifications).

GS * x y d1...dk

[Name] Define downloaded bit image

[Format] ASCII GS ∗ x y d1...dk

Hex 1D 2A x y d1...dk

Decimal 29 42 x y d1...dk

[Range] 1 ≤ x ≤ 255

1 ≤ y ≤ 48 [where 1 ≤ x × y ≤ 1536]

0 ≤ d ≤ 255

k = x × y × 8

[Description] • Defines the downloaded bit image in the downloaded graphic area.

- x specifies the number of bytes in the horizontal direction as x bytes.
- y specifies the number of bytes in the vertical direction as y bytes.
- d specifies the defined data (column format).

[Note] • A downloaded bit image and user-defined characters (ESC &) cannot be defined simultaneously. When this command is executed, all user-defined characters are deleted.

GS / m

[Name] Print downloaded bit image

[Format] ASCII GS / m

Hex 1D 2F m

Decimal 29 47 m

[Range] 0 ≤ m ≤ 3, 48 ≤ m ≤ 51

[Description] • Prints downloaded bit image defined by GS ∗ and using the mode specified by m.

M	mode	Vertical direction	Horizontal direction
0,48	normal	203dip	203dip
1,49	double-width	203dip	101dip
2,50	double-height	101dip	203dip

3,51	quadruple	101dip	101dip

GS :

[Name] Start/end macro definition

[Format] ASCII GS :

Hex 1D 3A

Decimal 29 58

[Description] • Starts or ends macro definition.

[Note] • The contents of the macro can be defined up to 2048 bytes.

GS B n

[Name] Turn white/black reverse print mode on/off

[Format] ASCII GS B n

Hex 1D 42 n

Decimal 29 66 n

[Range] 0 ≤ n ≤ 255

[Default] n = 0

[Description] • Turns white/black reverse print mode on or off.

• When the LSB of n is 0, turns off white/black reverse mode.

• When the LSB of, n is 1, turns on white/black reverse mode.

GS H n

[Name] Select print posit ion of HRI characters

[Format] ASCII GS H n

Hex 1D 48 n

Decimal 29 72 n

[Range] 0 ≤ n ≤ 3, 48 ≤ n ≤ 51

[Default] n = 0

[Description] • Selects the print position of HRI characters when printing a bar code.

n	Print position
0, 48	Not printed.
1, 49	Above the bar code.
2, 50	Below the bar code.
3, 51	Both above and below the bar code.

GS I n

[Name] Transmit printer ID

[Format] ASCII GS I n

Hex 1D 49 n

Decimal 29 73 n

[Range] n = 1, 2, 49, 50 [the printer ID]

65 ≤ n ≤ 69 [printer information B]

[Description] • Transmits the printer ID or the information of the printer specified.

• The printer IDs that can be specified are as follows:

n	Type of printer ID	ID
1,49	Printer model ID	hexadecimal : 20/ decimal32
2,50	Type ID	See table[type ID]

[type ID]

Bit	off/on	hex	decimal	contents
0	Off	00	0	Multi-byte code charactera not supported
	On	01	1	Multi-byte code characters supported
1	On	02	2	Autocutter installed (fixed)
2,3	--	--	--	Not used
4	off	00	0	Fixed
5	--	--	--	Reserved
6	--	--	--	Not used
7	关	00	0	Fixed

The information B that can be specified is as follows:

n	Type of printer information	contents
65	Firmware version	Depends on firware version
66	Manufacturer	"HPRT"
67	Printer name	"TP801" or "TP805 "or "TP806"
68	Priduct ID	Serial number
69	Type of mounted additional fonts	Simplified Chinese model:CHINA GB18030
		Chinese traditional model :TAIWAN BIG-5

[Note] • When this command is transmitted, do not transmit the subsequent data until the status is received.

GS L nL n H

[Name] Set left margin

[Format] ASCII GS L n L n H

Hex 1D 4C n L n H

Decimal 29 76 n L n H

[Range] 0 ≤ (n L + n H × 256) ≤ 65535 (0 ≤ n L ≤ 255, 0 ≤ n H ≤ 255)

[Default] (n L + n H × 256) = 0 (n L = 0, n H = 0)

[Description] • In standard mode, sets the left margin to [(n L + n H × 256) × (horizontal motion unit)].

GS P x y

[Name] Set horizontal and vertical motion units

[Format] ASCII GS P x y

Hex 1D 50 x y

Decimal 29 80 x y

[Range] 0 ≤ x ≤ 255

0 ≤ y ≤ 255

[Default] x = 180, y = 360

[Description] • Sets the horizontal and vertical motion units to approximately 25.4/x mm {1/ x "} and approximately 25.4/ y mm {1/ y "}, respectively.

• When x = 0, the default value of the horizontal motion unit is used.

• When y = 0, the default value of the vertical motion unit is used.

<A> GS V m

<B> GS V m n

[Name] Select cut mode and cut paper

[Format] <A> ASCII GS V m

Hex 1D 56 m

Decimal 29 86 m

<B> ASCII GS V m n

Hex 1D 56 m n

Decimal 29 86 m n

[Range] <A> m = 0, 1, 48, 49

<B> m = 65, 66, 0 ≤ n ≤ 255

[Description] • Executes paper cutting specified by m.

	m	Function
<A>	0, 48 1, 49	Cuts paper.
<B>	65, 66	Feeds paper to (cutting position + [*n* × (vertical motion unit)]) and cuts the paper.

[Note] • This printer executes a partial cut (one point left uncut).

GS W nL n H

[Name] Set print area width

[Format] ASCII GS W n L n H

Hex 1D 57 n L n H

Decimal 29 87 n L n H

[Range] 0 ≤ (n L + n H × 256) ≤ 65535 (0 ≤ n L ≤ 255, 0 ≤ n H ≤ 255)

[Default] (n L + n H × 256) = 576 (n L = 40, n H = 2) [80 mm paper width model]

(n L + n H × 256) = 384 (n L = 80, n H = 1) [58 mm paper width model]

[Description] • In standard mode, sets the print area width to [(n L + n H × 256) × (horizontal motion unit)].

GS \ nL n H

[Name] Set relative vertical print position in page mode

[Format] ASCII GS \ n L n H

Hex 1D 5C n L n H

Decimal 29 92 n L n H

[Range] -32768 ≤ (n L + n H × 256) ≤ 32767

[Description] • In page mode, moves the vertical print position to [(n L + n H × 256) × (vertical or horizontal motion unit)] from the current position.

• A positive number specifies downward movement, and a negative number specifies upward movement.

GS ^ r t m

[Name] Execute macro

[Format] ASCII GS ^ r t m

Hex 1D 5E r t m

Decimal 29 94 r t m

[Range] 1 ≤ r ≤ 255

0 ≤ t ≤ 255

m = 0, 1

[Description] • Executes the macro that was defined with GS :.

	m	Function
<A>	0, 48 1, 49	Cuts paper.
<B>	65, 66	Feeds paper to (cutting position + [*n* × (vertical motion unit)]) and cuts the paper.

GS a n

[Name] Enable/disable Automatic Status Back (ASB)

[Format] ASCII GS a n

Hex 1D 61 n

Decimal 29 97 n

[Range] 0 ≤ n ≤ 255

[Default] n = 0

[Description] • Enables or disables basic ASB (Automatic Status Back).

(*n*) Bit	Off/On	Hex	Decimal	Function
0	Off	00	0	Drawer kick-out connector status disabled.
	On	01	1	Drawer kick-out connector status enabled.
1	Off	00	0	Online/offline status disabled.
	On	02	2	Online/offline status enabled.
2	Off	00	0	Error status disabled.
	On	04	4	Error status enabled.
3	Off	00	0	Roll paper sensor status disabled.
	On	08	8	Roll paper sensor status enabled.
4 - 7	Off	00	0	Reserved.

- While basic ASB is active, the selected enabled basic ASB status is transmitted whenever the status changes.
- The basic ASB status to be transmitted is the four bytes that follow:
- First byte (printer information)

Bit	Off/On	Hex	Decimal	Status
0, 1	Off	00	0	Fixed.
2	Off	00	0	Drawer kick-out connector pin 3 is LOW.
	On	04	4	Drawer kick out connector pin 3 is HIGH.
3	Off	00	0	Online.
	On	08	8	Offline.
4	On	10	16	Fixed.
5	Off	00	0	Cover is closed.
	On	20	32	Cover is open.
6	Off	00	0	Paper is not being fed with the paper FEED button.
	On	40	64	Paper is being fed with the paper FEED button.
7	Off	00	0	Fixed.

• Second byte (printer information)

Bit	Off/On	Hex	Decimal	Status
0 - 2	--	--	--	Reserved.
3	Off	00	0	No autocutter error.
	On	08	8	Autocutter error occurred.
4	Off	00	0	Fixed.
5	Off	00	0	No unrecoverable error.
	On	20	32	Unrecoverable error occurred.
6	Off	00	0	No automatically recoverable error.
	On	40	64	Automatically recoverable error occurred.
7	Off	00	0	Fixed.

• Third byte (paper sensor information)

Bit	Off/On	Hex	Decimal	Status
0, 1	Off	00	0	Roll paper near-end sensor: paper adequate.
	On	03	3	Roll paper near-end sensor: paper near end.
2, 3	Off	00	0	Roll paper end sensor (Paper sensor): paper present.
	On	0C	12	Roll paper end sensor (Paper sensor): paper not present.
4	Off	00	0	Fixed.
5, 6	--	--	--	Reserved.
7	Off	00	0	Fixed.

• Fourth byte (paper sensor information)

Bit	Off/On	Hex	Decimal	Status
0 - 3	--	--	--	Reserved.
4	Off	00	0	Fixed.
5, 6	--	--	--	Reserved.
7	Off	00	0	Fixed.

[Reference] APPENDIX J

GS f n

[Name] Select font for HRI characters

[Format] ASCII GS f n

Hex 1D 66 n

Decimal 29 102 n

[Range] n = 0, 1, 48, 49

[Default] n = 0

[Description] • Selects a font for the HRI characters when printing a bar code.

n	Font for the HRI characters
0, 48	Character font A (12 × 24)
1, 49	Character font B (9 × 17)

GS g 0 m nL n H

[Name] Initialize maintenance counter

[Format] ASCII GS g 0 m nL n H

Hex 1D 67 30 m nL n H

Decimal 29 103 48 m nL n H

[Range] m = 0

(n L + n H × 256) = 20, 21, 50, 70 (n L = 20, 21, 50, 70, n H = 0)

[Description] • Sets the resettable maintenance counter specified by (n L + n H × 256) to 0.

($n_L + n_H \times 256$)		Maintenance counter [Units]
Hex	Decimal	
14	20	Number of lines fed. [Lines]
15	21	Number of head energization. [Times]
32	50	Number of autocutter operations. [Times].
46	70	Duration of printer operation. [Hours].

[Notes] • Frequent write command executions by an NV memory write command may damage the NV memory. Therefore, it is recommended to limit writing the commands into the NV memory to less than 10 times a day.

- If the power is turned off or the printer is reset via an interface while this command is being executed, the printer may go into an abnormal condition. Do not turn the power off or do not reset the printer vi a an interface while this command is being executed.
- While processing this command, the printer may become BUSY while writing the data to the NV memory and stops receiving data. Therefore, do not transmit data from the host computer while the printer is BUSY.

[Reference] APPENDIX G

GS g 2 m nL n H

[Name] Transmit maintenance counter

[Format] ASCII GS g 2 m nL n H

Hex 1D 67 32 m nL n H

Decimal 29 103 50 m nL n H

[Range] m = 0

(n L + n H × 256) = 20, 21, 50, 70, 148, 149, 178, 198

(n L = 20, 21, 50, 70, 148, 149, 178, 198, n H = 0)

[Description] • Transmits the value of the maintenance counter specified by (n L + n H × 256).

(*nL* + *nH* × 256)		Maintenance counter [Units]	Type of counter
Hex	Decimal		
14	20	Number of lines fed. [Lines]	Resettable (can be reset)
15	21	Number of head energization. [Times]	
32	50	Number of autocutter operations. [Times].	
46	70	Duration of printer operation. [Hours].	
94	148	Number of lines fed. [Lines]	Cumulative
95	149	Number of head energization. [Times]	
B2	178	Number of autocutter operations. [Times].	
C6	198	Duration of printer operation. [Hours].	

[Notes] • The maintenance counter values are measurements; therefore, their values will be affected by the timing of errors and how and when the power is turned off.

- When this command is transmitted, do not transmit the subsequent data until the status is received.

[Reference] APPENDIX G

GS h n

[Name] Set bar code height

[Format] ASCII GS h n

Hex 1D 68 n

Decimal 29 104 n

[Range] 1 ≤ n ≤ 255

[Default] n = 162

[Description] • Sets the height of the bar code to n dots.

<A> GS k m d1...dk NUL

<B> GS k m n d1...dn

[Name] Print bar code

[Format] <A> ASCII GS k m d1...dk NUL

Hex 1D 6B m d1...dk 00

Decimal 29 107 m d1...dk 0

<B> ASCII GS k m n d1...dn

Hex 1D 6B m n d1...dn

Decimal 29 107 m n d1...dn

[Range] <A> 0 ≤ m ≤ 6 (For the range of k and d, see [Description].)

<B> 65 ≤ m ≤ 73 (For the range of n and d, see [Description].)

[Description] • Prints the bar code using the bar code system specified by m.

For <Function A>

m	Bar code system	Range of *k*	Range of *d*
0	UPC-A	$k = 11, 12$	$48 \le d \le 57$
1	UPC-E	$k = 11, 12$	$48 \le d \le 57$ [where $d1 = 48$]
2	JAN13 / EAN13	$k = 12, 13$	$48 \le d \le 57$
3	JAN8 / EAN8	$k = 7, 8$	$48 \le d \le 57$
4	CODE39	$1 \le k$	$48 \le d \le 57$, $65 \le d \le 90$, $d = 32, 36, 37, 42, 43, 45, 46, 47$
5	ITF	$2 \le k$ (even number)	$48 \le d \le 57$
6	CODABAR (NW-7)	$2 \le k$	$48 \le d \le 57$, $65 \le d \le 68$, $97 \le d \le 100$, $d = 36, 43, 45, 46, 47, 58$ [where $65 \le d1 \le 68$, $65 \le dk \le 68$, $97 \le d1 \le 100$, $97 \le dk \le 100$]

- k of <Function A> indicates the number of bytes of bar code data.
- d specifies the bar code data.

For <Function B>

m	Bar code system	Range of *n*	Range of *d*
65	UPC-A	$n = 11, 12$	$48 \le d \le 57$
66	UPC-E	$n = 11, 12$	$48 \le d \le 57$ [where $d1 = 48$]
67	JAN13 / EAN13	$n = 12, 13$	$48 \le d \le 57$
68	JAN8 / EAN8	$n = 7, 8$	$48 \le d \le 57$
69	CODE39	$1 \le n \le 255$	$48 \le d \le 57$, $65 \le d \le 90$, $d = 32, 36, 37, 42, 43, 45, 46, 47$
70	ITF	$2 \le n \le 254$ (even number)	$48 \le d \le 57$
71	CODABAR (NW-7)	$2 \le n \le 255$	$48 \le d \le 57$, $65 \le d \le 68$, $97 \le d \le 100$, $d = 36, 43, 45, 46, 47, 58$ [where $65 \le d1 \le 68$, $65 \le dn \le 68$, $97 \le d1 \le 100$, $97 \le dn \le 100$]
72	CODE93	$1 \le n \le 255$	$0 \le d \le 127$
73	CODE128	$2 \le n \le 255$	$0 \le d \le 127$ [where $d1 = 123$, $65 \le d2 \le 67$]

- n of <Function B> specifies the number of bytes of bar code data.
- d specifies the bar code data.

[Note] • Users must secure the quiet zone (left or right side space area defined by the bar code standard) for bar code printing.

[Reference] APPENDIX H, APPENDIX I

GS r n

[Name] Transmit status

[Format] ASCII GS r n

Hex 1D 72 n

Decimal 29 114 n

[Range] n = 1, 2, 49, 50

[Description] • Transmits the status.

n	Function
1, 49	Transmits paper sensor status.
2, 50	Transmits drawer kick-out connector status.

• This printer transmits the following status.

• Paper sensor status (n = 1, 49)

Bit	Off/On	Hex	Decimal	Status
0, 1	Off	00	0	Roll paper near-end sensor: paper adequate.
	On	03	3	Roll paper near-end sensor: paper near end.
2, 3	Off	00	0	Roll paper end sensor (Paper sensor): paper present.
	On	0C	12	Roll paper end sensor (Paper sensor): paper not present.
4	Off	00	0	Fixed.
5, 6	--	--	--	Reserved.
7	Off	00	0	Fixed.

• Drawer kick-out connector status (n = 2, 50)

Bit	Off/On	Hex	Decimal	Status
0	Off	00	0	Drawer kick-out connector pin 3 is LOW.
	On	01	1	Drawer kick-out connector pin 3 is HIGH.
1 - 3	--	--	--	Reserved.
4	Off	00	0	Fixed.
5, 6	--	--	--	Reserved.
7	Off	00	0	Fixed.

[Note] • When this command is transmitted, do not transmit the subsequent data until this status is received.

GS w n

[Name] Set bar code width

[Format] ASCII GS w n

Hex 1D 77 n

Decimal 29 119 n

[Range] 2 ≤ n ≤ 6

[Default] n = 3

[Description] • Sets the horizontal size of the bar code.

n	Multi-level bar code	Binary-level bar code	
	Module width(mm)	Thin element width(mm)	Thick element width(mm)
2	0.25	0.25	0.625
3	0.375	0.375	2.303
4	0.5	0.5	1.250
5	0.625	0.625	1.625
6	0.750	0.750	2

• Multi-level bar codes are as follows:

UPC-A, UPC-E, JAN13 / EAN13, JAN8 / EAN8, CODE93, and CODE128

• Binary-level bar codes are as follows:

CODE39, ITF, and CODABAR

ESC v

GS r, which is the upward-compatible command replacing ESC v , is recommended to use, since ESC v is an obsolete command in the ESC/POS command system.

[Name] Transmit paper sensor status

[Format] ASCII ESC v

Hex 1B 76

Decimal 27 118

[Description] • Transmits the status of paper sensor(s) as 1 byte of data, as follows:

Bit	Off/On	Hex	Decimal	Status
0, 1	Off	00	0	Roll paper near-end sensor: paper adequate.
	On	03	3	Roll paper near-end sensor: paper near end.
2, 3	Off	00	0	Roll paper end sensor: paper present.
	On	0C	12	Roll paper end sensor: paper not present.
4	Off	00	0	Fixed.
5, 6	--	--	--	Reserved.
7	Off	00	0	Fixed.

Bits 2 and 3: While the cover is open, this shows the state when the cover was still closed. (This command is not executed.)

[Note] • When this command is transmitted, do not transmit the subsequent data until the status is received.

FS p n m

[Name] Print NV bit image

[Format] ASCII FS p n m

Hex 1C 70 n m

Decimal 28 112 n m

[Range] 1 ≤ n ≤ 255

0 ≤ m ≤ 3, 48 ≤ m ≤ 51

[Description] • Prints NV bit image n using the process of FS q and using the mode specified by m.

M	mode	Vertical direction	Horizontal direction
0,48	normal	203dip	203dip
1,49	double-width	203dip	101dip
2,50	double-height	101dip	203dip
3,51	quadruple	101dip	101dip

FS q n [x L x H y L y H d1...dk]1 ... [x L x H y L y H d1...dk]n

[Name] Define NV bit image

[Format] ASCII FS q n [xL x H y L y H d1...dk]1...[x L x H y L y H d1...dk]n

Hex 1C 71 n [xL x H y L y H d1...dk]1...[x L x H y L y H d1...dk]n

Decimal 28 113 n [xL x H y L y H d1...dk]1...[x L x H y L y H d1...dk]n

[Range] $1 \leq n \leq 255$

$1 \leq (xL + xH \times 256) \leq 1023$ $(0 \leq xL \leq 255, 0 \leq xH \leq 3)$

$1 \leq (yL + yH \times 256) \leq 288$ $(0 \leq yL \leq 255, yH = 0,1)$

$0 \leq d \leq 255$

$k = (xL + xH \times 256) \times (yL + yH \times 256) \times 8$

The entire capacity size = 256 KB.

[Description]
- Defines the NV bit image in the NV graphics area.
- n specifies the number of defined NV bit images.
- x L ,x H specify the number of bytes in the horizontal direction as (x L + x H × 256).
- y L , y H specify the number of bytes in the vertical direction as (y L + y H × 256).
- d specifies the defined data (column format).

[Notes]
- Frequent write command executions by an NV memory write command may damage the NV memory. Therefore, it is recommended to limit writing the commands into the NV memory to less than 10 times a day.
- If the power is turned off or the printer is reset via an interface while this command is being executed, the printer may go into an abnormal condition. Do not turn the power off or do not reset the printer vi a an interface while this command is being executed.
- While processing this command, the printer may become BUSY while writing data to the NV memory and stops receiving data. Therefore, do not to transmit data from the host computer while the printer is BUSY.
- The printer executes a software reset after processing this command.
- Clears the receive and print buffers.

- Resets all setting values in RAM (the print area, the character styles, user-defined characters, and others) that were in effect at power on. (The data in the NV memory are not reset.)
- NV bit image and NV graphics (GS (L/ GS 8 L) cannot be defined simultaneously. When this command is executed, all NV graphics are deleted.

GS v 0 m xL x H y L y H d1...dk

[Name] Print raster bit image

[Format] ASCII GS v 0 m xL x H y L y H d1...dk

Hex 1D 76 30 m xL x H y L y H d1...dk

Decimal 29 118 48 m xL x H y L y H d1...dk

[Range] $0 \le m \le 3, 48 \le m \le 51$

$1 \le (xL + xH \times 256) \le 65535$ $(0 \le xL \le 255, 0 \le xH \le 255)$

$1 \le (yL + yH \times 256) \le 2303$ $(0 \le yL \le 255, 0 \le yH \le 8)$

$0 \le d \le 255$

$k = (xL + xH \times 256) \times (yL + yH \times 256)$

[Description] • Prints a raster bit image using the mode specified by m.

M	mode	Vertical direction	Horizontal direction
0,48	normal	203dip	203dip
1,49	double-width	203dip	101dip
2,50	double-height	101dip	203dip
3,51	quadruple	101dip	101dip

- x L , x H specify the number of bytes in the horizontal direction as (x L + x H×256).
- y L , y H specify the number of dots in the vertical direction as (y L + y H × 256).
- d specifies the defined data (raster format).

ESC (A p L p H fn n c t1 t2 < Function 97 >

[Name] Beep integrated beeper in TP801 (TP805/TP806) models

[Format] ASCII ESC (A p L p H fn n c t1 t2

Hex 1B 28 41 05 00 61 n c t1 t2

Decimal 27 40 65 5 097n c t1t2

[Range] (p L + pH × 256) = 5 (p L = 5, p H = 0)

fn = 97

n = 100

0 ≤ c ≤ 63

0 ≤ t1 ≤ 255

0 ≤ t2 ≤ 255

[Description] Beeps the integrated beeper.

- c specifies times of beeping.
- t1 specifies beeping time (t1 × 100 ms).
- t2 specifies time for stop beeping (t2 × 100 ms).

[Notes] •This function repeats integrated beeper control of [(t1 × 100 ms) beep/ (t2 ×100 ms) stop] c times.

- If this command is newly processed during beeping of the buzzer, the current process for beeping the buzzer is stopped and the new process for beeping the buzzer is started.
- Integrated beeper beeping by this function stops due to any of t he following factors.
- Finish specification of (c).
- Reset or power off.

Appendix A

Page 0 [PC437: USA, Standard Europe]

HEX	8	9	A	B	C	D	E	F
0	Ç 128	É 144	á 160	░ 176	└ 192	╨ 208	α 224	≡ 240
1	ü 129	æ 145	í 161	▒ 177	┴ 193	╤ 209	β 225	± 241
2	é 130	Æ 146	ó 162	▓ 178	┬ 194	╥ 210	Γ 226	≥ 242
3	â 131	ô 147	ú 163	│ 179	├ 195	╙ 211	π 227	≤ 243
4	ä 132	ö 148	ñ 164	┤ 180	─ 196	╘ 212	Σ 228	⌠ 244
5	à 133	ò 149	Ñ 165	╡ 181	┼ 197	╒ 213	σ 229	⌡ 245
6	å 134	û 150	ª 166	╢ 182	╞ 198	╓ 214	µ 230	÷ 246
7	ç 135	ù 151	º 167	╖ 183	╟ 199	╫ 215	τ 231	≈ 247
8	ê 136	ÿ 152	¿ 168	╕ 184	╚ 200	╪ 216	Φ 232	° 248
9	ë 137	Ö 153	⌐ 169	╣ 185	╔ 201	┘ 217	Θ 233	∙ 249
A	è 138	Ü 154	¬ 170	║ 186	╩ 202	┌ 218	Ω 234	· 250
B	ï 139	¢ 155	½ 171	╗ 187	╦ 203	█ 219	δ 235	√ 251
C	î 140	£ 156	¼ 172	╝ 188	╠ 204	▄ 220	∞ 236	ⁿ 252
D	ì 141	¥ 157	¡ 173	╜ 189	═ 205	▌ 221	Φ 237	² 253
E	Ä 142	Pt 158	« 174	╛ 190	╬ 206	▐ 222	ε 238	■ 254
F	Å 143	ƒ 159	» 175	┐ 191	╧ 207	▀ 223	∩ 239	SP 255

Page 1 [Katakana]

HEX	8	9	A	B	C	D	E	F
0	_ 128	┴ 144	SP 160	ー 176	ﾀ 192	ﾐ 208	═ 224	╳ 240
1	▬ 129	┬ 145	｡ 161	ｱ 177	ﾁ 193	ﾑ 209	╞ 225	円 241
2	▬ 130	┤ 146	｢ 162	ｲ 178	ﾂ 194	ﾒ 210	╪ 226	年 242
3	▬ 131	├ 147	｣ 163	ｳ 179	ﾃ 195	ﾓ 211	╡ 227	月 243
4	■ 132	━ 148	､ 164	ｴ 180	ﾄ 196	ﾔ 212	◢ 228	日 244
5	■ 133	─ 149	･ 165	ｵ 181	ﾅ 197	ﾕ 213	◣ 229	時 245
6	■ 134	│ 150	ｦ 166	ｶ 182	ﾆ 198	ﾖ 214	◥ 230	分 246
7	■ 135	┃ 151	ｧ 167	ｷ 183	ﾇ 199	ﾗ 215	◤ 231	秒 247
8	136	┌ 152	ｨ 168	ｸ 184	ﾈ 200	ﾘ 216	♠ 232	千 248
9	▏ 137	┐ 153	ｩ 169	ｹ 185	ﾉ 201	ﾙ 217	♥ 233	市 249
A	▏ 138	└ 154	ｪ 170	ｺ 186	ﾊ 202	ﾚ 218	♦ 234	区 250
B	▏ 139	┘ 155	ｫ 171	ｻ 187	ﾋ 203	ﾛ 219	♣ 235	町 251
C	▏ 140	┌ 156	ｬ 172	ｼ 188	ﾌ 204	ﾜ 220	● 236	村 252
D	▏ 141	┐ 157	ｭ 173	ｽ 189	ﾍ 205	ﾝ 221	○ 237	人 253
E	▏ 142	└ 158	ｮ 174	ｾ 190	ﾎ 206	゛ 222	╱ 238	▒ 254
F	┼ 143	┘ 159	ｯ 175	ｿ 191	ﾏ 207	゜ 223	╲ 239	SP 255

Page 2 [PC850: Multilingual]

HEX	8	9	A	B	C	D	E	F
0	Ç 128	É 144	á 160	░ 176	└ 192	ð 208	Ó 224	- 240
1	ü 129	æ 145	í 161	▒ 177	┴ 193	Ð 209	ß 225	± 241
2	é 130	Æ 146	ó 162	▓ 178	┬ 194	Ê 210	Ô 226	‗ 242
3	â 131	ô 147	ú 163	│ 179	├ 195	Ë 211	Ò 227	¾ 243
4	ä 132	ö 148	ñ 164	┤ 180	─ 196	È 212	õ 228	¶ 244
5	à 133	ò 149	Ñ 165	Á 181	┼ 197	ı 213	Õ 229	§ 245
6	å 134	û 150	ª 166	Â 182	ã 198	Í 214	µ 230	÷ 246
7	ç 135	ù 151	º 167	À 183	Ã 199	Î 215	þ 231	¸ 247
8	ê 136	ÿ 152	¿ 168	© 184	╚ 200	Ï 216	Þ 232	° 248
9	ë 137	Ö 153	® 169	╣ 185	╔ 201	┘ 217	Ú 233	¨ 249
A	è 138	Ü 154	¬ 170	║ 186	╩ 202	┌ 218	Û 234	· 250
B	ï 139	ø 155	½ 171	╗ 187	╦ 203	█ 219	Ù 235	¹ 251
C	î 140	£ 156	¼ 172	╝ 188	╠ 204	▄ 220	ý 236	³ 252
D	ì 141	Ø 157	¡ 173	¢ 189	═ 205	¦ 221	Ý 237	² 253
E	Ä 142	× 158	« 174	¥ 190	╬ 206	Ì 222	¯ 238	■ 254
F	Å 143	ƒ 159	» 175	┐ 191	¤ 207	▀ 223	´ 239	SP 255

Page 3 [PC860: Portuguese]

HEX	8	9	A	B	C	D	E	F
0	Ç 128	É 144	á 160	░ 176	└ 192	╨ 208	α 224	≡ 240
1	ü 129	À 145	í 161	▒ 177	┴ 193	╤ 209	β 225	± 241
2	é 130	È 146	ó 162	▓ 178	┬ 194	╥ 210	Γ 226	≥ 242
3	â 131	ô 147	ú 163	│ 179	├ 195	╙ 211	π 227	≤ 243
4	ã 132	õ 148	ñ 164	┤ 180	─ 196	╘ 212	Σ 228	⌠ 244
5	à 133	ò 149	Ñ 165	╡ 181	┼ 197	╒ 213	σ 229	⌡ 245
6	Á 134	Ú 150	ª 166	╢ 182	╞ 198	╓ 214	µ 230	÷ 246
7	ç 135	ù 151	º 167	╖ 183	╟ 199	╫ 215	τ 231	≈ 247
8	ê 136	Ì 152	¿ 168	╕ 184	╚ 200	╪ 216	Φ 232	° 248
9	Ê 137	Õ 153	Ò 169	╣ 185	╔ 201	┘ 217	Θ 233	• 249
A	è 138	Ü 154	¬ 170	║ 186	╩ 202	┌ 218	Ω 234	· 250
B	Í 139	¢ 155	½ 171	╗ 187	╦ 203	█ 219	δ 235	√ 251
C	Ô 140	£ 156	¼ 172	╝ 188	╠ 204	▄ 220	∞ 236	ⁿ 252
D	ì 141	Ù 157	¡ 173	╜ 189	═ 205	▌ 221	Φ 237	² 253
E	Ã 142	Pt 158	« 174	╛ 190	╬ 206	▐ 222	ε 238	■ 254
F	Â 143	Ó 159	» 175	┐ 191	╧ 207	▀ 223	∩ 239	SP 255

Page 4 [PC863: Canadian-French]

HEX	8	9	A	B	C	D	E	F
0	Ç 128	É 144	¦ 160	░ 176	└ 192	╨ 208	α 224	≡ 240
1	ü 129	È 145	´ 161	▒ 177	┴ 193	╤ 209	β 225	± 241
2	é 130	Ê 146	ó 162	▓ 178	┬ 194	╥ 210	Γ 226	≥ 242
3	â 131	ô 147	ú 163	│ 179	├ 195	╙ 211	π 227	≤ 243
4	Â 132	Ë 148	¨ 164	┤ 180	─ 196	╘ 212	Σ 228	⌠ 244
5	à 133	Ï 149	¸ 165	╡ 181	┼ 197	╒ 213	σ 229	⌡ 245
6	¶ 134	û 150	ª 166	╢ 182	╞ 198	╓ 214	µ 230	÷ 246
7	Ç 135	ù 151	¯ 167	╖ 183	╟ 199	╫ 215	τ 231	≈ 247
8	ê 136	¤ 152	Î 168	╕ 184	╚ 200	╪ 216	Φ 232	° 248
9	ë 137	Ô 153	⌐ 169	╣ 185	╔ 201	┘ 217	Θ 233	• 249
A	è 138	Ü 154	¬ 170	║ 186	╩ 202	┌ 218	Ω 234	· 250
B	ï 139	¢ 155	½ 171	╗ 187	╦ 203	█ 219	δ 235	√ 251
C	î 140	£ 156	¼ 172	╝ 188	╠ 204	▄ 220	∞ 236	ⁿ 252
D	‗ 141	Ù 157	¾ 173	╜ 189	═ 205	▌ 221	Φ 237	² 253
E	À 142	Û 158	« 174	╛ 190	╬ 206	▐ 222	ε 238	■ 254
F	§ 143	ƒ 159	» 175	┐ 191	╧ 207	▀ 223	∩ 239	SP 255

Page 5 [PC865: Nordic]

HEX	8	9	A	B	C	D	E	F
0	Ç 128	É 144	á 160	░ 176	└ 192	╨ 208	α 224	≡ 240
1	ü 129	æ 145	í 161	▒ 177	┴ 193	╤ 209	β 225	± 241
2	é 130	Æ 146	ó 162	▓ 178	┬ 194	╥ 210	Γ 226	≥ 242
3	â 131	ô 147	ú 163	│ 179	├ 195	╙ 211	π 227	≤ 243
4	ä 132	ö 148	ñ 164	┤ 180	─ 196	╘ 212	Σ 228	⌠ 244
5	à 133	ò 149	Ñ 165	╡ 181	┼ 197	╒ 213	σ 229	⌡ 245
6	ª 134	û 150	ª 166	╢ 182	╞ 198	╓ 214	µ 230	÷ 246
7	º 135	ù 151	º 167	╖ 183	╟ 199	╫ 215	τ 231	≈ 247
8	ê 136	ÿ 152	¿ 168	╕ 184	╚ 200	╪ 216	Φ 232	° 248
9	ë 137	Ö 153	⌐ 169	╣ 185	╔ 201	┘ 217	Θ 233	• 249
A	è 138	Ü 154	¬ 170	║ 186	╩ 202	┌ 218	Ω 234	· 250
B	ï 139	ø 155	½ 171	╗ 187	╦ 203	█ 219	δ 235	√ 251
C	î 140	£ 156	¼ 172	╝ 188	╠ 204	▄ 220	∞ 236	ⁿ 252
D	ì 141	Ø 157	¡ 173	╜ 189	═ 205	▌ 221	Φ 237	² 253
E	Ä 142	Pt 158	« 174	╛ 190	╬ 206	▐ 222	ε 238	■ 254
F	Å 143	ƒ 159	¤ 175	┐ 191	╧ 207	▀ 223	∩ 239	SP 255

Page 13 [PC857: Turkish]

HEX	8	9	A	B	C	D	E	F
0	Ç 128	É 144	á 160	░ 176	└ 192	º 208	Ó 224	– 240
1	ü 129	æ 145	í 161	▒ 177	┴ 193	ª 209	β 225	± 241
2	é 130	Æ 146	ó 162	▓ 178	┬ 194	Ê 210	Ô 226	SP 242
3	â 131	ô 147	ú 163	│ 179	├ 195	Ë 211	Ò 227	¾ 243
4	ä 132	ö 148	ñ 164	┤ 180	─ 196	È 212	õ 228	¶ 244
5	à 133	ò 149	Ñ 165	Á 181	┼ 197	€ 213	Õ 229	§ 245
6	å 134	û 150	Ğ 166	Â 182	ã 198	Í 214	µ 230	÷ 246
7	ç 135	ù 151	ğ 167	À 183	Ã 199	Î 215	SP 231	¸ 247
8	ê 136	İ 152	¿ 168	© 184	╚ 200	Ï 216	× 232	° 248
9	ë 137	Ö 153	® 169	╣ 185	╔ 201	┘ 217	Ú 233	¨ 249
A	è 138	Ü 154	¬ 170	║ 186	╩ 202	┌ 218	Û 234	· 250
B	ï 139	ø 155	½ 171	╗ 187	╦ 203	█ 219	Ù 235	¹ 251
C	î 140	£ 156	¼ 172	╝ 188	╠ 204	▄ 220	ì 236	³ 252
D	ı 141	Ø 157	¡ 173	¢ 189	═ 205	¦ 221	ÿ 237	² 253
E	Ä 142	Ş 158	« 174	¥ 190	╬ 206	Ì 222	¯ 238	■ 254
F	Å 143	ş 159	» 175	┐ 191	¤ 207	▀ 223	´ 239	SP 255

Page 14 [PC737: Greek]

HEX	8	9	A	B	C	D	E	F
0	Α 128	Ρ 144	ι 160	░ 176	└ 192	╨ 208	ω 224	Ώ 240
1	Β 129	Σ 145	κ 161	▒ 177	┴ 193	╤ 209	ά 225	± 241
2	Γ 130	Τ 146	λ 162	▓ 178	┬ 194	╥ 210	έ 226	≥ 242
3	Δ 131	Υ 147	μ 163	│ 179	├ 195	╙ 211	ή 227	≤ 243
4	Ε 132	Φ 148	ν 164	┤ 180	─ 196	╘ 212	ϊ 228	Ϊ 244
5	Ζ 133	Χ 149	ξ 165	╡ 181	┼ 197	╒ 213	ί 229	Ϋ 245
6	Η 134	Ψ 150	ο 166	╢ 182	╞ 198	╓ 214	ό 230	÷ 246
7	Θ 135	Ω 151	π 167	╖ 183	╟ 199	╫ 215	ύ 231	≈ 247
8	Ι 136	α 152	ρ 168	╕ 184	╚ 200	╪ 216	ϋ 232	° 248
9	Κ 137	β 153	σ 169	╣ 185	╔ 201	┘ 217	ώ 233	• 249
A	Λ 138	γ 154	ς 170	║ 186	╩ 202	┌ 218	Ά 234	· 250
B	Μ 139	δ 155	τ 171	╗ 187	╦ 203	█ 219	Έ 235	√ 251
C	Ν 140	ε 156	υ 172	╝ 188	╠ 204	▄ 220	Ή 236	ⁿ 252
D	≡ 141	ζ 157	φ 173	╜ 189	═ 205	▌ 221	Ί 237	² 253
E	Ο 142	η 158	χ 174	╛ 190	╬ 206	▐ 222	Ό 238	■ 254
F	Π 143	θ 159	ψ 175	┐ 191	╧ 207	▀ 223	Ύ 239	SP 255

Page 15 [ISO8859-7: Greek]

HEX	8	9	A	B	C	D	E	F
0	SP 128	SP 144	SP 160	° 176	ΐ 192	Π 208	ΰ 224	π 240
1	SP 129	SP 145	‘ 161	± 177	Α 193	Ρ 209	α 225	ρ 241
2	SP 130	SP 146	’ 162	² 178	Β 194	SP 210	β 226	ς 242
3	SP 131	SP 147	£ 163	³ 179	Γ 195	Σ 211	γ 227	σ 243
4	SP 132	SP 148	€ 164	΄ 180	Δ 196	Τ 212	δ 228	τ 244
5	SP 133	SP 149	*Dp* 165	΄΄ 181	Ε 197	Υ 213	ε 229	υ 245
6	SP 134	SP 150	¦ 166	Ά 182	Ζ 198	Φ 214	ζ 230	φ 246
7	SP 135	SP 151	§ 167	• 183	Η 199	Χ 215	η 231	χ 247
8	SP 136	SP 152	¨ 168	Έ 184	Θ 200	Ψ 216	θ 232	ψ 248
9	SP 137	SP 153	© 169	Ή 185	Ι 201	Ω 217	ι 233	ω 249
A	SP 138	SP 154	ͺ 170	Ί 186	Κ 202	Ϊ 218	κ 234	ϊ 250
B	SP 139	SP 155	« 171	» 187	Λ 203	Ϋ 219	λ 235	ΰ 251
C	SP 140	SP 156	¬ 172	Ό 188	Μ 204	ά 220	μ 236	ό 252
D	SP 141	SP 157	- 173	½ 189	Ν 205	έ 221	ν 237	ύ 253
E	SP 142	SP 158	SP 174	Ύ 190	Ξ 206	ή 222	ξ 238	ώ 254
F	SP 143	SP 159	— 175	Ώ 191	Ο 207	ί 223	ο 239	SP 255

Page 16 [WPC1252]

HEX	8	9	A	B	C	D	E	F
0	€ 128	SP 144	SP 160	° 176	À 192	Ð 208	à 224	ð 240
1	SP 129	‘ 145	¡ 161	± 177	Á 193	Ñ 209	á 225	ñ 241
2	‚ 130	’ 146	¢ 162	² 178	Â 194	Ò 210	â 226	ò 242
3	ƒ 131	“ 147	£ 163	³ 179	Ã 195	Ó 211	ã 227	ó 243
4	„ 132	” 148	¤ 164	´ 180	Ä 196	Ô 212	ä 228	ô 244
5	… 133	• 149	¥ 165	µ 181	Å 197	Õ 213	å 229	õ 245
6	† 134	– 150	¦ 166	¶ 182	Æ 198	Ö 214	æ 230	ö 246
7	‡ 135	— 151	§ 167	· 183	Ç 199	× 215	ç 231	÷ 247
8	ˆ 136	˜ 152	¨ 168	¸ 184	È 200	Ø 216	è 232	ø 248
9	‰ 137	™ 153	© 169	¹ 185	É 201	Ù 217	é 233	ù 249
A	Š 138	š 154	ª 170	º 186	Ê 202	Ú 218	ê 234	ú 250
B	‹ 139	› 155	« 171	» 187	Ë 203	Û 219	ë 235	û 251
C	Œ 140	œ 156	¬ 172	¼ 188	Ì 204	Ü 220	ì 236	ü 252
D	SP 141	SP 157	- 173	½ 189	Í 205	Ý 221	í 237	ý 253
E	Ž 142	ž 158	® 174	¾ 190	Î 206	Þ 222	î 238	þ 254
F	SP 143	Ÿ 159	¯ 175	¿ 191	Ï 207	β 223	ï 239	ÿ 255

Page 17 [PC866: Cyrillic #2]

HEX	8	9	A	B	C	D	E	F
0	А 128	Р 144	а 160	░ 176	└ 192	╨ 208	р 224	Ё 240
1	Б 129	С 145	б 161	▒ 177	┴ 193	╤ 209	с 225	ё 241
2	В 130	Т 146	в 162	▓ 178	┬ 194	╥ 210	т 226	Є 242
3	Г 131	У 147	г 163	│ 179	├ 195	╙ 211	у 227	є 243
4	Д 132	Ф 148	д 164	┤ 180	─ 196	╘ 212	ф 228	Ї 244
5	Е 133	Х 149	е 165	╡ 181	┼ 197	╒ 213	х 229	ї 245
6	Ж 134	Ц 150	ж 166	╢ 182	╞ 198	╓ 214	ц 230	Ў 246
7	З 135	Ч 151	з 167	╖ 183	╟ 199	╫ 215	ч 231	ў 247
8	И 136	Ш 152	и 168	╕ 184	╚ 200	╪ 216	ш 232	° 248
9	Й 137	Щ 153	й 169	╣ 185	╔ 201	┘ 217	щ 233	• 249
A	К 138	Ъ 154	к 170	║ 186	╩ 202	┌ 218	ъ 234	· 250
B	Л 139	Ы 155	л 171	╗ 187	╦ 203	█ 219	ы 235	√ 251
C	М 140	Ь 156	м 172	╝ 188	╠ 204	▄ 220	ь 236	№ 252
D	Н 141	Э 157	н 173	╜ 189	═ 205	▌ 221	э 237	¤ 253
E	О 142	Ю 158	о 174	╛ 190	╬ 206	▐ 222	ю 238	■ 254
F	П 143	Я 159	п 175	┐ 191	╧ 207	▀ 223	я 239	SP 255

Page 18 [PC852: Latin2]

HEX	8	9	A	B	C	D	E	F
0	Ç 128	É 144	á 160	░ 176	└ 192	đ 208	Ó 224	- 240
1	ü 129	Ĺ 145	í 161	▒ 177	┴ 193	Đ 209	ß 225	˝ 241
2	é 130	Í 146	ó 162	▓ 178	┬ 194	Ď 210	Ô 226	˛ 242
3	â 131	ô 147	ú 163	│ 179	├ 195	Ě 211	Ń 227	ˇ 243
4	ä 132	ö 148	Ą 164	┤ 180	─ 196	ď 212	ń 228	˘ 244
5	ů 133	Ľ 149	ą 165	Á 181	┼ 197	Ň 213	ň 229	§ 245
6	ć 134	ľ 150	Ž 166	Â 182	Ă 198	Í 214	Š 230	÷ 246
7	ç 135	Ś 151	ž 167	Ě 183	ă 199	Î 215	š 231	¸ 247
8	ł 136	ś 152	Ę 168	Ş 184	╚ 200	ě 216	Ŕ 232	° 248
9	ë 137	Ö 153	ę 169	╣ 185	╔ 201	┘ 217	Ú 233	¨ 249
A	Ő 138	Ü 154	€ 170	║ 186	╩ 202	┌ 218	ŕ 234	• 250
B	ő 139	Ť 155	ź 171	╗ 187	╦ 203	█ 219	Ű 235	ű 251
C	î 140	ť 156	Č 172	╝ 188	╠ 204	▄ 220	ý 236	Ř 252
D	Ź 141	Ł 157	ş 173	Ż 189	═ 205	Ţ 221	Ý 237	ř 253
E	Ä 142	× 158	« 174	ż 190	╬ 206	Ů 222	ţ 238	■ 254
F	Ć 143	č 159	» 175	┐ 191	¤ 207	▀ 223	´ 239	SP 255

Page 19 [PC858: Euro]

HEX	8	9	A	B	C	D	E	F
0	Ç 128	É 144	á 160	░ 176	└ 192	ð 208	Ó 224	– 240
1	ü 129	æ 145	í 161	▒ 177	┴ 193	Ð 209	β 225	± 241
2	é 130	Æ 146	ó 162	▓ 178	┬ 194	Ê 210	Ô 226	‗ 242
3	â 131	ô 147	ú 163	│ 179	├ 195	Ë 211	Ò 227	¾ 243
4	ä 132	ö 148	ñ 164	┤ 180	─ 196	È 212	õ 228	¶ 244
5	à 133	ò 149	Ñ 165	Á 181	┼ 197	€ 213	Õ 229	§ 245
6	å 134	û 150	ª 166	Â 182	ã 198	Í 214	µ 230	÷ 246
7	ç 135	ù 151	º 167	À 183	Ã 199	Î 215	þ 231	¸ 247
8	ê 136	ÿ 152	¿ 168	© 184	╚ 200	Ï 216	Þ 232	° 248
9	ë 137	Ö 153	® 169	╣ 185	╔ 201	┘ 217	Ú 233	¨ 249
A	è 138	Ü 154	¬ 170	║ 186	╩ 202	┌ 218	Û 234	· 250
B	ï 139	ø 155	½ 171	╗ 187	╦ 203	█ 219	Ù 235	¹ 251
C	î 140	£ 156	¼ 172	╝ 188	╠ 204	▄ 220	ý 236	³ 252
D	ì 141	Ø 157	¡ 173	¢ 189	═ 205	¦ 221	Ý 237	² 253
E	Ä 142	× 158	« 174	¥ 190	╬ 206	Ì 222	¯ 238	■ 254
F	Å 143	ƒ 159	» 175	┐ 191	¤ 207	▀ 223	´ 239	SP 255

Page 20 [KU42: Thai]

HEX	8	9	A	B	C	D	E	F
0	ก 128	๐ 144	SP 160	ฌ 176	ย 192	เ 208	็ 224	๗ 240
1	ข 129	๑ 145	ก 161	ณ 177	ร 193	แ 209	่ 225	๘ 241
2	ค 130	๒ 146	ข 162	ด 178	ฤ 194	โ 210	้ 226	๙ 242
3	ฃ 131	๓ 147	ค 163	ต 179	ล 195	ใ 211	๊ 227	๚ 243
4	ฅ 132	๔ 148	ฆ 164	ถ 180	ฦ 196	ไ 212	๋ 228	๛ 244
5	ฆ 133	๕ 149	ง 165	ท 181	ศ 197	ๆ 213	์ 229	๗ 245
6	ง 134	๖ 150	จ 166	ธ 182	ษ 198	ๆ 214	ํ 230	๘ 246
7	จ 135	๗ 151	ฉ 167	น 183	ส 199	๎ 215	๋ 231	๙ 247
8	ฉ 136	๘ 152	ช 168	บ 184	ห 200	๏ 216	์ 232	๚ 248
9	ช 137	๙ 153	ซ 169	ป 185	ฬ 201	๐ 217	ํ 233	๗ 249
A	ซ 138	๚ 154	ฌ 170	ผ 186	อ 202	๑ 218	๎ 234	๘ 250
B	ฌ 139	๗ 155	ญ 171	ฝ 187	ฮ 203	๒ 219	๏ 235	๙ 251
C	ญ 140	๘ 156	ฎ 172	พ 188	ะ 204	๓ 220	๐ 236	๚ 252
D	ฎ 141	๙ 157	ฏ 173	ฟ 189	า 205	๔ 221	๑ 237	๗ 253
E	ฏ 142	๚ 158	ฐ 174	ภ 190	ำ 206	๕ 222	๒ 238	๘ 254
F	ฐ 143	๗ 159	ฑ 175	ม 191	ิ 207	๖ 223	๓ 239	SP 255

Page 21 [TIS11: Thai]

HEX	8	9	A	B	C	D	E	F
0	๋ 128	๐ 144	เ 160	ฐ 176	ภ 192	ะ 208	เ 224	๐ 240
1	ะ 129	๑ 145	ก 161	ฑ 177	ม 193	ั 209	แ 225	๑ 241
2	ะ 130	๒ 146	ข 162	ฒ 178	ย 194	า 210	โ 226	๒ 242
3	๋ 131	๓ 147	ฃ 163	ณ 179	ร 195	ำ 211	ใ 227	๓ 243
4	๋ 132	๔ 148	ค 164	ด 180	ฤ 196	ิ 212	ไ 228	๔ 244
5	๋ 133	๕ 149	ฅ 165	ต 181	ล 197	ี 213	า 229	๕ 245
6	๋ 134	๖ 150	ฆ 166	ถ 182	ฦ 198	ึ 214	ๆ 230	๖ 246
7	๋ 135	๗ 151	ง 167	ท 183	ว 199	ื 215	๎ 231	๗ 247
8	๋ 136	๘ 152	จ 168	ธ 184	ศ 200	ุ 216	็ 232	๘ 248
9	๋ 137	๙ 153	ฉ 169	น 185	ษ 201	ู 217	่ 233	๙ 249
A	๋ 138	า 154	ช 170	บ 186	ส 202	ฺ 218	้ 234	๊ 250
B	๋ 139	๊ 155	ซ 171	ป 187	ห 203	฿ 219	๋ 235	๋ 251
C	๋ 140	๋ 156	ฌ 172	ผ 188	ฬ 204	เ 220	์ 236	์ 252
D	๋ 141	ํ 157	ญ 173	ฝ 189	อ 205	แ 221	ํ 237	ํ 253
E	๋ 142	๎ 158	ฎ 174	พ 190	ฮ 206	โ 222	๎ 238	๎ 254
F	๋ 143	๏ 159	ฏ 175	ฟ 191	ฯ 207	ใ 223	๏ 239	SP 255

Page 26 [TIS18: Thai]

HEX	8	9	A	B	C	D	E	F
0	ก 128	ร 144	SP 160	ฐ 176	ภ 192	ะ 208	เ 224	๐ 240
1	ข 129	ร 145	ก 161	ฑ 177	ม 193	ั 209	แ 225	๑ 241
2	ค 130	ล 146	ข 162	ฒ 178	ย 194	า 210	โ 226	๒ 242
3	ฆ 131	ว 147	ข 163	ณ 179	ร 195	ำ 211	ใ 227	๓ 243
4	ง 132	ศ 148	ค 164	ด 180	ฤ 196	ิ 212	ไ 228	๔ 244
5	จ 133	ษ 149	ค 165	ต 181	ล 197	ี 213	ๅ 229	๕ 245
6	ฉ 134	ส 150	ฆ 166	ถ 182	ฦ 198	ึ 214	ๆ 230	๖ 246
7	ช 135	ห 151	ง 167	ท 183	ว 199	ื 215	็ 231	๗ 247
8	ซ 136	ฬ 152	จ 168	ธ 184	ศ 200	ุ 216	่ 232	๘ 248
9	ฌ 137	อ 153	ฉ 169	น 185	ษ 201	ู 217	้ 233	๙ 249
A	ญ 138	ฮ 154	ช 170	บ 186	ส 202	ฺ 218	๊ 234	๚ 250
B	ฎ 139	ฯ 155	ซ 171	ป 187	ห 203	฿ 219	๋ 235	๛ 251
C	ฏ 140	ะ 156	ฌ 172	ผ 188	ฬ 204	เ 220	์ 236	๜ 252
D	ฐ 141	า 157	ญ 173	ฝ 189	อ 205	แ 221	ํ 237	๝ 253
E	ฑ 142	ำ 158	ฎ 174	พ 190	ฮ 206	โ 222	ๆ 238	๞ 254
F	ฒ 143	ิ 159	ฎ 175	ฟ 191	ฯ 207	ใ 223	๐ 239	SP 255

Page 32 [PC720: Arabic]

HEX	8	9	A	B	C	D	E	F
0	SP 128	SP 144	ب 160	▒ 176	╚ 192	╩ 208	ض 224	≡ 240
1	SP 129	ً 145	ة 161	▓ 177	╩ 193	╦ 209	ط 225	٭ 241
2	é 130	ٌ 146	ت 162	▓ 178	╦ 194	╠ 210	ظ 226	٭ 242
3	â 131	ô 147	ث 163	│ 179	╠ 195	═ 211	ع 227	٭ 243
4	SP 132	¤ 148	ج 164	┤ 180	═ 196	╬ 212	غ 228	٭ 244
5	à 133	٠ 149	ح 165	╡ 181	╬ 197	╧ 213	ف 229	٭ 245
6	SP 134	û 150	خ 166	╢ 182	╠ 198	╨ 214	ق 230	٭ 246
7	ç 135	ù 151	د 167	╖ 183	╟ 199	╫ 215	ق 231	≈ 247
8	ê 136	ء 152	ذ 168	╕ 184	╚ 200	╪ 216	ك 232	° 248
9	ë 137	آ 153	ر 169	╣ 185	╔ 201	╤ 217	ل 233	٭ 249
A	è 138	أ 154	ز 170	║ 186	╩ 202	┌ 218	م 234	٭ 250
B	ï 139	ؤ 155	س 171	╗ 187	╦ 203	╗ 219	ن 235	√ 251
C	î 140	£ 156	ش 172	╝ 188	╠ 204	■ 220	ه 236	n 252
D	SP 141	¦ 157	ص 173	╜ 189	═ 205	▌ 221	و 237	² 253
E	SP 142	ئ 158	« 174	╛ 190	╬ 206	▐ 222	ى 238	■ 254
F	SP 143	ا 159	» 175	┐ 191	╩ 207	■ 223	ي 239	SP 255

Page 33 [WPC775: Baltic Rim]

HEX	8	9	A	B	C	D	E	F
0	Ć 128	É 144	Ā 160	░ 176	└ 192	ą 208	Ó 224	– 240
1	ü 129	æ 145	Ī 161	▒ 177	┴ 193	č 209	ß 225	± 241
2	é 130	Æ 146	ó 162	▓ 178	┬ 194	ę 210	Ō 226	" 242
3	ā 131	ō 147	Ż 163	│ 179	├ 195	ė 211	Ń 227	¾ 243
4	ä 132	ö 148	ż 164	┤ 180	─ 196	į 212	õ 228	¶ 244
5	ģ 133	Ş 149	ź 165	Ą 181	┼ 197	š 213	Õ 229	§ 245
6	å 134	¢ 150	" 166	Č 182	Ų 198	ų 214	µ 230	÷ 246
7	ć 135	Ś 151	¦ 167	Ę 183	Ū 199	ū 215	ń 231	" 247
8	ł 136	ś 152	© 168	Ė 184	╚ 200	ž 216	Ķ 232	° 248
9	ē 137	Ö 153	® 169	╣ 185	╔ 201	┘ 217	ķ 233	· 249
A	Ŗ 138	Ü 154	¬ 170	║ 186	╩ 202	┌ 218	Ļ 234	· 250
B	ŗ 139	ø 155	½ 171	╗ 187	╦ 203	█ 219	ļ 235	¹ 251
C	Ī 140	£ 156	¼ 172	╝ 188	╠ 204	▄ 220	ņ 236	³ 252
D	Ź 141	Ø 157	Ł 173	╜ 189	═ 205	▌ 221	Ē 237	² 253
E	Ä 142	× 158	« 174	Š 190	╬ 206	▐ 222	Ņ 238	■ 254
F	Å 143	¤ 159	» 175	┐ 191	Ž 207	▀ 223	' 239	SP 255

Page 34 [PC855: Cyrillic]

HEX	8	9	A	B	C	D	E	F
0	ђ 128	љ 144	а 160	░ 176	└ 192	л 208	Я 224	– 240
1	Ђ 129	Љ 145	А 161	▒ 177	┴ 193	Л 209	р 225	ы 241
2	ѓ 130	њ 146	б 162	▓ 178	┬ 194	м 210	Р 226	Ы 242
3	Ѓ 131	Њ 147	Б 163	│ 179	├ 195	М 211	с 227	з 243
4	ё 132	ћ 148	ц 164	┤ 180	─ 196	н 212	С 228	З 244
5	Ё 133	Ћ 149	Ц 165	х 181	┼ 197	Н 213	т 229	ш 245
6	є 134	ќ 150	д 166	Х 182	к 198	о 214	Т 230	Ш 246
7	Є 135	Ќ 151	Д 167	и 183	К 199	О 215	у 231	э 247
8	ѕ 136	ў 152	е 168	И 184	╚ 200	п 216	У 232	Э 248
9	Ѕ 137	Ў 153	Е 169	╣ 185	╔ 201	┘ 217	ж 233	щ 249
A	і 138	ц 154	ф 170	║ 186	╩ 202	г 218	Ж 234	Щ 250
B	І 139	Ц 155	Ф 171	╗ 187	╦ 203	╭ 219	в 235	ч 251
C	ї 140	ю 156	г 172	╝ 188	╠ 204	▄ 220	В 236	Ч 252
D	Ї 141	Ю 157	Г 173	й 189	═ 205	П 221	ь 237	§ 253
E	ј 142	ъ 158	« 174	Й 190	╬ 206	я 222	Ь 238	■ 254
F	Ј 143	Ъ 159	» 175	┐ 191	¤ 207	▀ 223	№ 239	SP 255

Page 36 [PC862: Hebrew]

HEX	8	9	A	B	C	D	E	F
0	א 128	נ 144	á 160	░ 176	└ 192	╨ 208	α 224	≡ 240
1	ב 129	ס 145	í 161	▒ 177	┴ 193	╤ 209	ß 225	± 241
2	ג 130	ע 146	ó 162	▓ 178	┬ 194	╥ 210	Γ 226	≥ 242
3	ד 131	ף 147	ú 163	│ 179	├ 195	╙ 211	π 227	≤ 243
4	ה 132	פ 148	ñ 164	┤ 180	─ 196	╘ 212	Σ 228	⌠ 244
5	ו 133	צ 149	Ñ 165	╡ 181	┼ 197	╒ 213	σ 229	⌡ 245
6	ז 134	ץ 150	ª 166	╢ 182	╞ 198	╓ 214	µ 230	÷ 246
7	ח 135	ק 151	º 167	╖ 183	╟ 199	╫ 215	τ 231	≈ 247
8	ט 136	ר 152	¿ 168	╕ 184	╚ 200	╪ 216	Φ 232	° 248
9	י 137	ש 153	⌐ 169	╣ 185	╔ 201	┘ 217	Θ 233	∙ 249
A	ך 138	ת 154	¬ 170	║ 186	╩ 202	┌ 218	Ω 234	· 250
B	כ 139	¢ 155	½ 171	╗ 187	╦ 203	█ 219	δ 235	√ 251
C	ל 140	£ 156	¼ 172	╝ 188	╠ 204	▄ 220	∞ 236	ⁿ 252
D	ם 141	¥ 157	¡ 173	╜ 189	═ 205	▌ 221	φ 237	² 253
E	מ 142	₧ 158	« 174	╛ 190	╬ 206	▐ 222	ε 238	■ 254
F	ן 143	ƒ 159	» 175	┐ 191	╧ 207	▀ 223	∩ 239	SP 255

Page 37 [PC864: Arabic]

HEX	8	9	A	B	C	D	E	F
0	° 128	β 144	SP 160	٠ 176	¢ 192	ذ 208	- 224	240
1	· 129	∞ 145	- 161	١ 177	ء 193	ر 209	ف 225	241
2	· 130	φ 146	ا 162	٢ 178	آ 194	ز 210	ق 226	ن 242
3	√ 131	± 147	£ 163	٣ 179	أ 195	س 211	ك 227	ه 243
4	▒ 132	½ 148	¤ 164	٤ 180	ؤ 196	ش 212	ل 228	ة 244
5	─ 133	¼ 149	إ 165	٥ 181	ع 197	ص 213	م 229	ى 245
6	│ 134	≈ 150	SP 166	٦ 182	ئ 198	ض 214	ن 230	ي 246
7	┼ 135	« 151	€ 167	٧ 183	ا 199	ط 215	هـ 231	غ 247
8	┤ 136	» 152	ا 168	٨ 184	ب 200	ظ 216	و 232	ق 248
9	┬ 137	لأ 153	ب 169	٩ 185	ة 201	ع 217	ى 233	لآ 249
A	├ 138	لا 154	ت 170	ف 186	ت 202	غ 218	ى 234	لأ 250
B	┴ 139	SP 155	ث 171	ء 187	ث 203	إ 219	ض 235	ل 251
C	┐ 140	SP 156	، 172	س 188	ج 204	٦ 220	هـ 236	ك 252
D	┌ 141	لا 157	ج 173	ش 189	ح 205	÷ 221	غ 237	ي 253
E	└ 142	لا 158	ح 174	ص 190	خ 206	× 222	غ 238	■ 254
F	┘ 143	ء 159	خ 175	؟ 191	د 207	ع 223	م 239	SP 255

Page 39 [ISO8859-2: Latin2]

HEX	8	9	A	B	C	D	E	F
0	░ 128	└ 144	SP 160	° 176	Ŕ 192	Đ 208	ŕ 224	đ 240
1	▒ 129	┴ 145	Ą 161	ą 177	Á 193	Ń 209	á 225	ń 241
2	▓ 130	┬ 146	˘ 162	˛ 178	Â 194	Ň 210	â 226	ň 242
3	│ 131	├ 147	Ł 163	ł 179	Ă 195	Ó 211	ă 227	ó 243
4	┤ 132	─ 148	¤ 164	´ 180	Ä 196	Ô 212	ä 228	ô 244
5	╡ 133	┼ 149	Ľ 165	ľ 181	Ĺ 197	Ő 213	Í 229	ő 245
6	╢ 134	╞ 150	Ś 166	ś 182	Ć 198	Ö 214	ć 230	ö 246
7	╖ 135	╟ 151	§ 167	ˇ 183	Ç 199	× 215	ç 231	÷ 247
8	© 136	╕ 152	¨ 168	¸ 184	Č 200	Ř 216	č 232	ř 248
9	╣ 137	╢ 153	Š 169	š 185	É 201	Ů 217	é 233	ů 249
A	╗ 138	╖ 154	Ş 170	ş 186	Ę 202	Ú 218	ę 234	ú 250
B	╝ 139	╜ 155	Ť 171	ť 187	Ë 203	Ű 219	ë 235	ű 251
C	╜ 140	╛ 156	Ź 172	ź 188	Ě 204	Ü 220	ě 236	ü 252
D	¢ 141	═ 157	- 173	˝ 189	Í 205	Ý 221	í 237	ý 253
E	¥ 142	╬ 158	Ž 174	ž 190	Î 206	Ţ 222	î 238	ţ 254
F	┐ 143	® 159	Ż 175	ż 191	Ď 207	ß 223	ď 239	˙ 255

Page 40 [ISO8859-15: Latin9]

HEX	8	9	A	B	C	D	E	F
0	SP 128	SP 144	SP 160	° 176	À 192	Ð 208	à 224	ð 240
1	SP 129	SP 145	¡ 161	± 177	Á 193	Ñ 209	á 225	ñ 241
2	SP 130	SP 146	¢ 162	² 178	Â 194	Ò 210	â 226	ò 242
3	SP 131	SP 147	£ 163	³ 179	Ã 195	Ó 211	ã 227	ó 243
4	SP 132	SP 148	€ 164	Ž 180	Ä 196	Ô 212	ä 228	ô 244
5	SP 133	SP 149	¥ 165	µ 181	Å 197	Õ 213	å 229	õ 245
6	SP 134	SP 150	Š 166	¶ 182	Æ 198	Ö 214	æ 230	ö 246
7	SP 135	SP 151	§ 167	· 183	Ç 199	× 215	ç 231	÷ 247
8	SP 136	SP 152	š 168	ž 184	È 200	Ø 216	è 232	ø 248
9	SP 137	SP 153	© 169	¹ 185	É 201	Ù 217	é 233	ù 249
A	SP 138	SP 154	ª 170	º 186	Ê 202	Ú 218	ê 234	ú 250
B	SP 139	SP 155	« 171	» 187	Ë 203	Û 219	ë 235	û 251
C	SP 140	SP 156	¬ 172	Œ 188	Ì 204	Ü 220	ì 236	ü 252
D	SP 141	SP 157	- 173	œ 189	Í 205	Ý 221	í 237	ý 253
E	SP 142	SP 158	® 174	Ÿ 190	Î 206	Þ 222	î 238	þ 254
F	SP 143	SP 159	¯ 175	¿ 191	Ï 207	ß 223	ï 239	ÿ 255

Page 45 [WPC1250: Latin 2]

HEX	8	9	A	B	C	D	E	F
0	€ 128	SP 144	SP 160	° 176	Ŕ 192	Đ 208	ŕ 224	đ 240
1	SP 129	‘ 145	˘ 161	± 177	Á 193	Ń 209	á 225	ń 241
2	‚ 130	’ 146	ˇ 162	˛ 178	Â 194	Ň 210	â 226	ň 242
3	SP 131	“ 147	Ł 163	ł 179	Ă 195	Ó 211	ă 227	ó 243
4	„ 132	” 148	¤ 164	´ 180	Ä 196	Ô 212	ä 228	ô 244
5	… 133	• 149	Ą 165	µ 181	Ĺ 197	Ő 213	Í 229	ő 245
6	† 134	– 150	¦ 166	¶ 182	Ć 198	Ö 214	ć 230	ö 246
7	‡ 135	— 151	§ 167	· 183	Ç 199	× 215	ç 231	÷ 247
8	SP 136	SP 152	¨ 168	¸ 184	Č 200	Ř 216	č 232	ř 248
9	‰ 137	™ 153	© 169	ą 185	É 201	Ů 217	é 233	ů 249
A	Š 138	š 154	Ş 170	ş 186	Ę 202	Ú 218	ę 234	ú 250
B	‹ 139	› 155	« 171	» 187	Ë 203	Ű 219	ë 235	ű 251
C	Ś 140	ś 156	¬ 172	Ľ 188	Ě 204	Ü 220	ě 236	ü 252
D	Ť 141	ť 157	- 173	˝ 189	Í 205	Ý 221	í 237	ý 253
E	Ž 142	ž 158	® 174	ľ 190	Î 206	Ţ 222	î 238	ţ 254
F	Ź 143	ź 159	Ż 175	ż 191	Ď 207	ß 223	ď 239	˙ 255

Page 46 [WPC1251: Cyrillic]

HEX	8	9	A	B	C	D	E	F
0	Ђ 128	ђ 144	SP 160	° 176	А 192	Р 208	а 224	р 240
1	Ѓ 129	‘ 145	Ў 161	± 177	Б 193	С 209	б 225	с 241
2	‚ 130	’ 146	ў 162	І 178	В 194	Т 210	в 226	т 242
3	ѓ 131	“ 147	Ј 163	і 179	Г 195	У 211	г 227	у 243
4	„ 132	” 148	¤ 164	ґ 180	Д 196	Ф 212	д 228	ф 244
5	… 133	• 149	Ґ 165	µ 181	Е 197	Х 213	е 229	х 245
6	† 134	– 150	¦ 166	¶ 182	Ж 198	Ц 214	ж 230	ц 246
7	‡ 135	— 151	§ 167	· 183	З 199	Ч 215	з 231	ч 247
8	€ 136	SP 152	Ё 168	ё 184	И 200	Ш 216	и 232	ш 248
9	‰ 137	™ 153	© 169	№ 185	Й 201	Щ 217	й 233	щ 249
A	Љ 138	љ 154	Є 170	є 186	К 202	Ъ 218	к 234	ъ 250
B	‹ 139	› 155	« 171	» 187	Л 203	Ы 219	л 235	ы 251
C	Њ 140	њ 156	¬ 172	ј 188	М 204	Ь 220	м 236	ь 252
D	Ќ 141	ќ 157	- 173	Ѕ 189	Н 205	Э 221	н 237	э 253
E	Ћ 142	ћ 158	® 174	ѕ 190	О 206	Ю 222	о 238	ю 254
F	Џ 143	џ 159	Ї 175	ї 191	П 207	Я 223	п 239	я 255

Page 47 [WPC1253: Greek]

HEX	8	9	A	B	C	D	E	F
0	€ 128	SP 144	SP 160	° 176	ΐ 192	Π 208	ΰ 224	π 240
1	SP 129	‘ 145	΄ 161	± 177	Α 193	Ρ 209	α 225	ρ 241
2	‚ 130	’ 146	Ά 162	² 178	Β 194	SP 210	β 226	ς 242
3	ƒ 131	“ 147	£ 163	³ 179	Γ 195	Σ 211	γ 227	σ 243
4	„ 132	” 148	¤ 164	´ 180	Δ 196	Τ 212	δ 228	τ 244
5	… 133	• 149	¥ 165	µ 181	Ε 197	Υ 213	ε 229	υ 245
6	† 134	– 150	¦ 166	¶ 182	Ζ 198	Φ 214	ζ 230	φ 246
7	‡ 135	— 151	§ 167	· 183	Η 199	Χ 215	η 231	χ 247
8	SP 136	SP 152	¨ 168	Έ 184	Θ 200	Ψ 216	θ 232	ψ 248
9	‰ 137	™ 153	© 169	Ή 185	Ι 201	Ω 217	ι 233	ω 249
A	SP 138	SP 154	ª 170	Ί 186	Κ 202	Ϊ 218	κ 234	ϊ 250
B	‹ 139	› 155	« 171	» 187	Λ 203	Ϋ 219	λ 235	ΰ 251
C	SP 140	SP 156	¬ 172	Ό 188	Μ 204	ά 220	μ 236	ό 252
D	SP 141	SP 157	- 173	½ 189	Ν 205	έ 221	ν 237	ύ 253
E	SP 142	SP 158	® 174	Ύ 190	Ξ 206	ή 222	ξ 238	ώ 254
F	SP 143	SP 159	― 175	Ώ 191	Ο 207	ί 223	ο 239	SP 255

Page 48 [WPC1254: Turkish]

HEX	8	9	A	B	C	D	E	F
0	€ 128	SP 144	SP 160	° 176	À 192	Ğ 208	à 224	ğ 240
1	SP 129	‘ 145	¡ 161	± 177	Á 193	Ñ 209	á 225	ñ 241
2	‚ 130	’ 146	¢ 162	² 178	Â 194	Ò 210	â 226	ò 242
3	ƒ 131	“ 147	£ 163	³ 179	Ã 195	Ó 211	ã 227	ó 243
4	„ 132	” 148	¤ 164	´ 180	Ä 196	Ô 212	ä 228	ô 244
5	… 133	• 149	¥ 165	µ 181	Å 197	Õ 213	å 229	õ 245
6	† 134	– 150	¦ 166	¶ 182	Æ 198	Ö 214	æ 230	ö 246
7	‡ 135	— 151	§ 167	· 183	Ç 199	× 215	ç 231	÷ 247
8	ˆ 136	˜ 152	¨ 168	¸ 184	È 200	Ø 216	è 232	ø 248
9	‰ 137	™ 153	© 169	¹ 185	É 201	Ù 217	é 233	ù 249
A	Š 138	š 154	ª 170	º 186	Ê 202	Ú 218	ê 234	ú 250
B	‹ 139	› 155	« 171	» 187	Ë 203	Û 219	ë 235	û 251
C	Œ 140	œ 156	¬ 172	¼ 188	Ì 204	Ü 220	ì 236	ü 252
D	SP 141	SP 157	- 173	½ 189	Í 205	İ 221	í 237	ı 253
E	SP 142	SP 158	® 174	¾ 190	Î 206	Ş 222	î 238	ş 254
F	SP 143	Ÿ 159	¯ 175	¿ 191	Ï 207	ß 223	ï 239	ÿ 255

Page 49 [WPC1255: Hebrew]

HEX	8	9	A	B	C	D	E	F
0	€ 128	SP 144	SP 160	° 176	ְ 192	ִ 208	א 224	נ 240
1	SP 129	‘ 145	¡ 161	± 177	ֱ 193	ֵ 209	ב 225	ס 241
2	‚ 130	’ 146	¢ 162	² 178	ֲ 194	ֶ 210	ג 226	ע 242
3	ƒ 131	“ 147	£ 163	³ 179	ֳ 195	ַ 211	ד 227	ף 243
4	„ 132	” 148	₪ 164	´ 180	ִ 196	ָ 212	ה 228	פ 244
5	… 133	• 149	¥ 165	µ 181	ֵ 197	ֹ 213	ו 229	צ 245
6	† 134	– 150	¦ 166	¶ 182	ֶ 198	ֻ 214	ז 230	ץ 246
7	‡ 135	— 151	§ 167	· 183	ַ 199	ּ 215	ח 231	ק 247
8	ˆ 136	˜ 152	¨ 168	¸ 184	ָ 200	ֽ 216	ט 232	ר 248
9	‰ 137	™ 153	© 169	¹ 185	ִ 201	SP 217	י 233	ש 249
A	SP 138	SP 154	× 170	÷ 186	SP 202	SP 218	ך 234	ת 250
B	‹ 139	› 155	« 171	» 187	ֻ 203	SP 219	כ 235	SP 251
C	SP 140	SP 156	¬ 172	¼ 188	ּ 204	SP 220	ל 236	SP 252
D	SP 141	SP 157	- 173	½ 189	ֽ 205	SP 221	ם 237	SP 253
E	SP 142	SP 158	® 174	¾ 190	־ 206	SP 222	מ 238	SP 254
F	SP 143	SP 159	¯ 175	¿ 191	ֿ 207	SP 223	ן 239	SP 255

Page 50 [WPC1256: Arabic]

HEX	8	9	A	B	C	D	E	F
0	€ 128	گ 144	SP 160	° 176	ـ 192	ذ 208	à 224	ً 240
1	پ 129	‘ 145	، 161	± 177	ء 193	ر 209	ل 225	ٌ 241
2	‚ 130	’ 146	¢ 162	² 178	آ 194	ز 210	â 226	ٍ 242
3	ƒ 131	“ 147	£ 163	³ 179	أ 195	س 211	م 227	َ 243
4	„ 132	” 148	¤ 164	´ 180	ؤ 196	ش 212	ن 228	ô 244
5	… 133	• 149	¥ 165	µ 181	إ 197	ص 213	ه 229	ُ 245
6	† 134	– 150	¦ 166	¶ 182	ئ 198	ض 214	و 230	ِ 246
7	‡ 135	— 151	§ 167	· 183	ا 199	× 215	ç 231	÷ 247
8	ˆ 136	ک 152	¨ 168	¸ 184	ب 200	ط 216	è 232	ّ 248
9	‰ 137	™ 153	© 169	¹ 185	ة 201	ظ 217	é 233	ù 249
A	ث 138	ژ 154	ه 170	؛ 186	ت 202	ع 218	ê 234	ْ 250
B	‹ 139	› 155	« 171	» 187	ث 203	غ 219	ë 235	û 251
C	Œ 140	œ 156	¬ 172	¼ 188	ج 204	ـ 220	ى 236	ü 252
D	ج 141	SP 157	- 173	½ 189	ح 205	ف 221	ي 237	SP 253
E	ژ 142	SP 158	® 174	¾ 190	خ 206	ق 222	î 238	SP 254
F	ڈ 143	ں 159	¯ 175	؟ 191	د 207	ك 223	ï 239	ے 255

Page 51 [WPC1257: Baltic Rim]

HEX	8	9	A	B	C	D	E	F
0	€ 128	SP 144	SP 160	° 176	Ą 192	Š 208	ą 224	š 240
1	SP 129	‘ 145	SP 161	± 177	Į 193	Ń 209	į 225	ń 241
2	‚ 130	’ 146	¢ 162	² 178	Ā 194	Ņ 210	ā 226	ņ 242
3	SP 131	“ 147	£ 163	³ 179	Ć 195	Ó 211	ć 227	ó 243
4	„ 132	” 148	¤ 164	´ 180	Ä 196	Ō 212	ä 228	ō 244
5	… 133	• 149	SP 165	µ 181	Å 197	Õ 213	å 229	õ 245
6	† 134	– 150	¦ 166	¶ 182	Ę 198	Ö 214	ę 230	ö 246
7	‡ 135	— 151	§ 167	· 183	Ē 199	× 215	ē 231	÷ 247
8	SP 136	SP 152	Ø 168	ø 184	Č 200	Ų 216	č 232	ų 248
9	‰ 137	™ 153	© 169	¹ 185	É 201	Ł 217	é 233	ł 249
A	SP 138	SP 154	Ŗ 170	ŗ 186	Ź 202	Ś 218	ź 234	ś 250
B	‹ 139	› 155	« 171	» 187	Ė 203	Ū 219	ė 235	ū 251
C	SP 140	SP 156	¬ 172	¼ 188	Ģ 204	Ü 220	ģ 236	ü 252
D	¨ 141	¯ 157	- 173	½ 189	Ķ 205	Ž 221	ķ 237	ž 253
E	ˇ 142	˛ 158	® 174	¾ 190	Ī 206	Ž 222	ī 238	ž 254
F	˙ 143	SP 159	Æ 175	æ 191	Ļ 207	ß 223	ļ 239	˙ 255

Page 52 [WPC1258: Vietnamese]

HEX	8	9	A	B	C	D	E	F
0	€ 128	SP 144	SP 160	° 176	À 192	Đ 208	à 224	đ 240
1	SP 129	' 145	¡ 161	± 177	Á 193	Ñ 209	á 225	ñ 241
2	‚ 130	' 146	¢ 162	² 178	Â 194	̉ 210	â 226	̣ 242
3	ƒ 131	" 147	£ 163	³ 179	Ă 195	Ó 211	ă 227	ó 243
4	„ 132	" 148	¤ 164	´ 180	Ä 196	Ô 212	ä 228	ô 244
5	… 133	• 149	¥ 165	µ 181	Å 197	Ơ 213	å 229	ơ 245
6	† 134	– 150	¦ 166	¶ 182	Æ 198	Ö 214	æ 230	ö 246
7	‡ 135	— 151	§ 167	· 183	Ç 199	× 215	ç 231	÷ 247
8	ˆ 136	˜ 152	¨ 168	¸ 184	È 200	Ø 216	è 232	ø 248
9	‰ 137	™ 153	© 169	¹ 185	É 201	Ù 217	é 233	ù 249
A	SP 138	SP 154	ª 170	º 186	Ê 202	Ú 218	ê 234	ú 250
B	‹ 139	› 155	« 171	» 187	Ë 203	Û 219	ë 235	û 251
C	Œ 140	œ 156	¬ 172	¼ 188	̀ 204	Ü 220	́ 236	ü 252
D	SP 141	SP 157	̆ 173	½ 189	Í 205	Ư 221	í 237	ư 253
E	SP 142	SP 158	® 174	¾ 190	Î 206	̃ 222	î 238	₫ 254
F	SP 143	Ÿ 159	̄ 175	¿ 191	Ï 207	ß 223	ï 239	ỹ 255