PL-1

(2080x380x450)

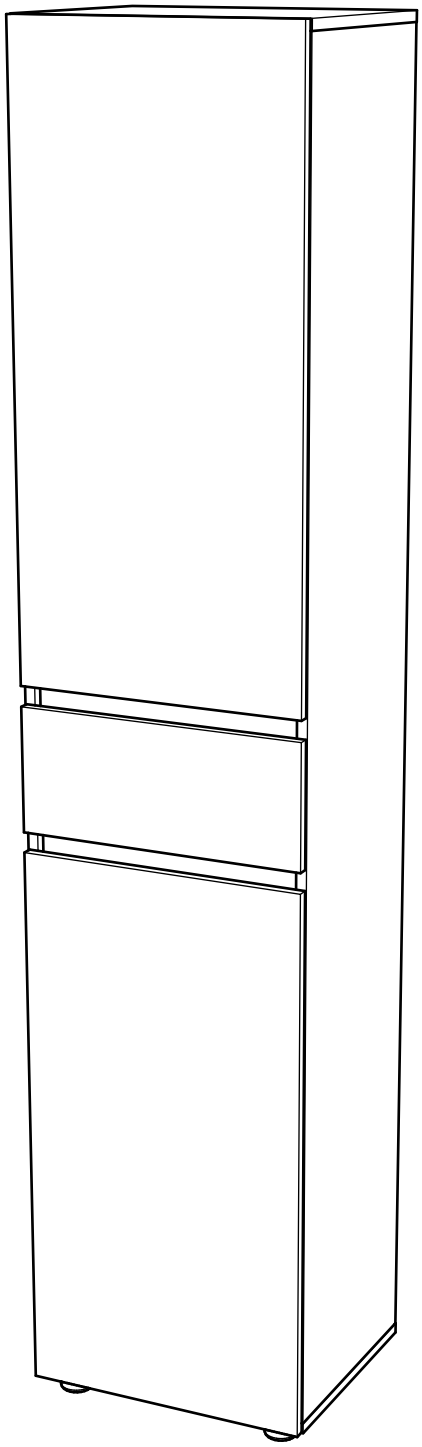

1. 451x360-1
2. 451x360-1
3. 2020x360-1
4. 2020x360-1
5. 418x360-1
6. 418x360-3
7. 418x70-1
8. 418x110-1
9. 418x150-1
10. 446x943-1
11. 446x191-1
12. 446x854-1
13. 360x110-1
14. 360x110-1
15. 350x110-2
16. 389x346-1
17. 2048x222-2
18. 2019mm-1

1 — 24 x 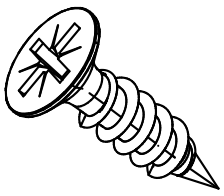 3,5x16	2 — 2 x 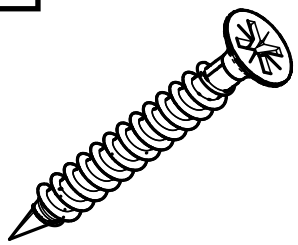 4x30	3 — 8 x 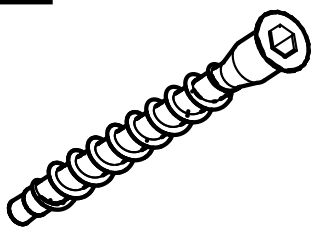	4 — 1 x 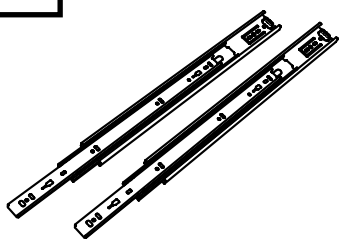 300mm
5 — 4 x 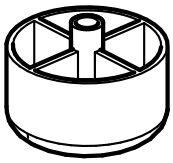	6 — 4 x 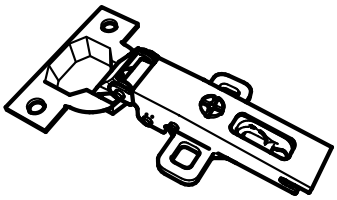	7 — 8 x 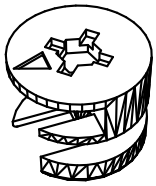	8 — 8 x 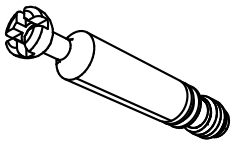
9 — 70 x 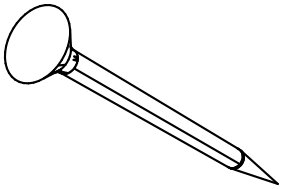	10 — 8 x 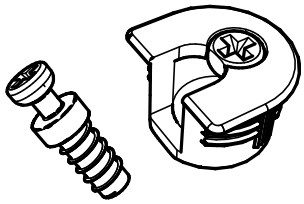	11 — 14 x 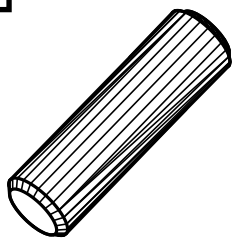	12 — 12 x 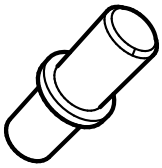

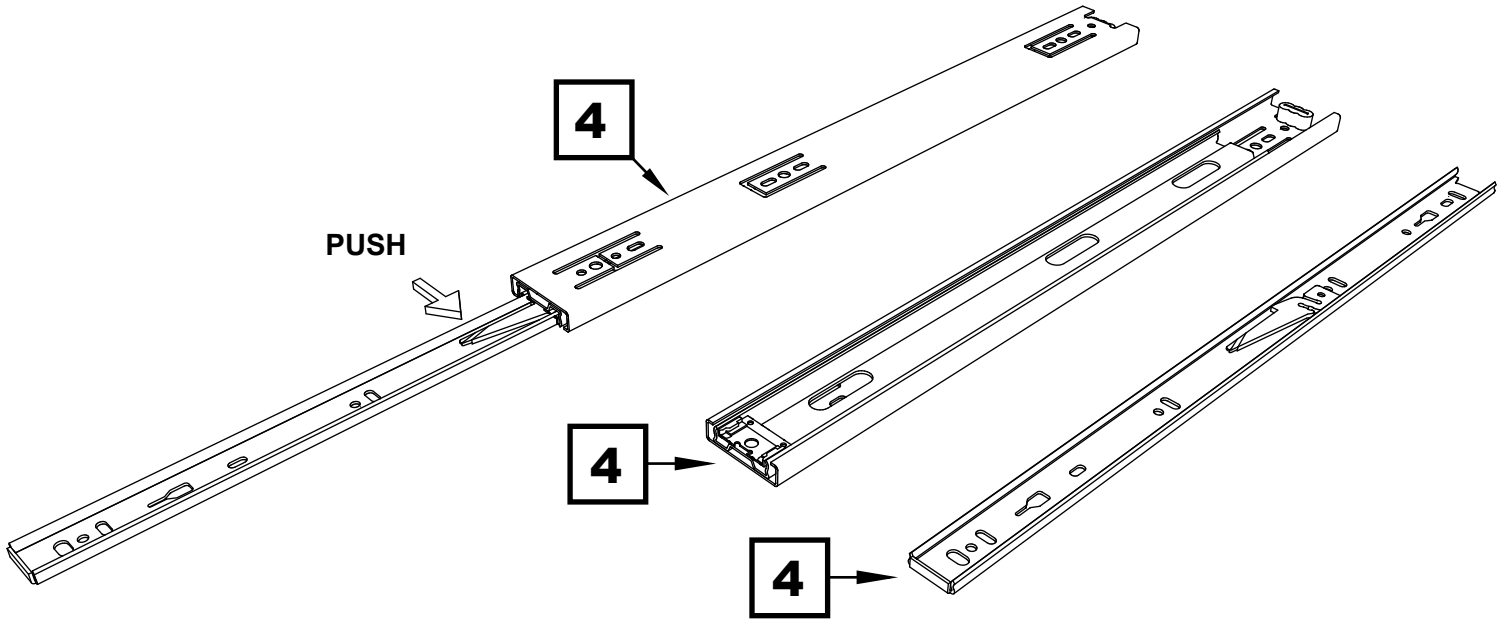

1

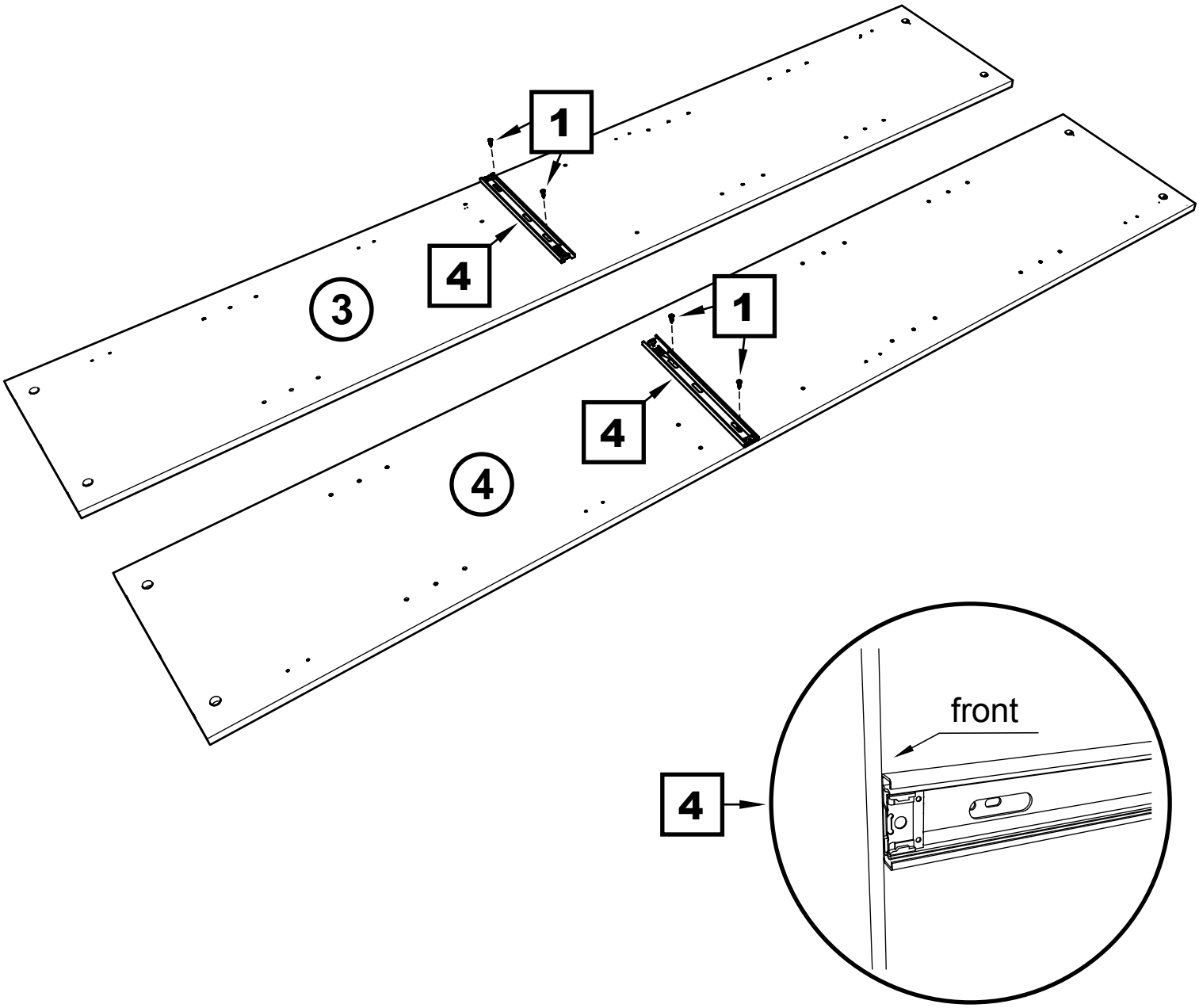

2

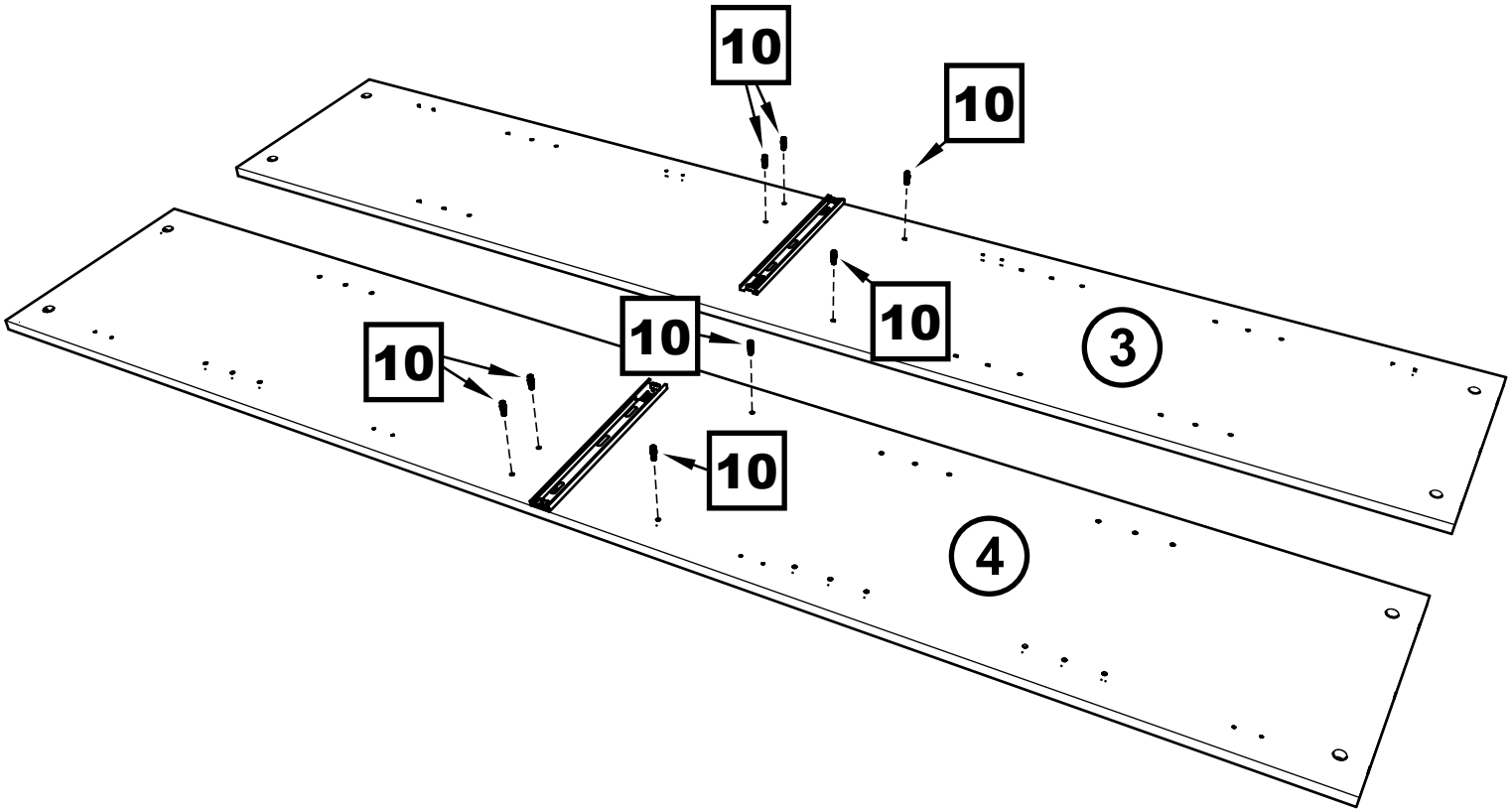

3

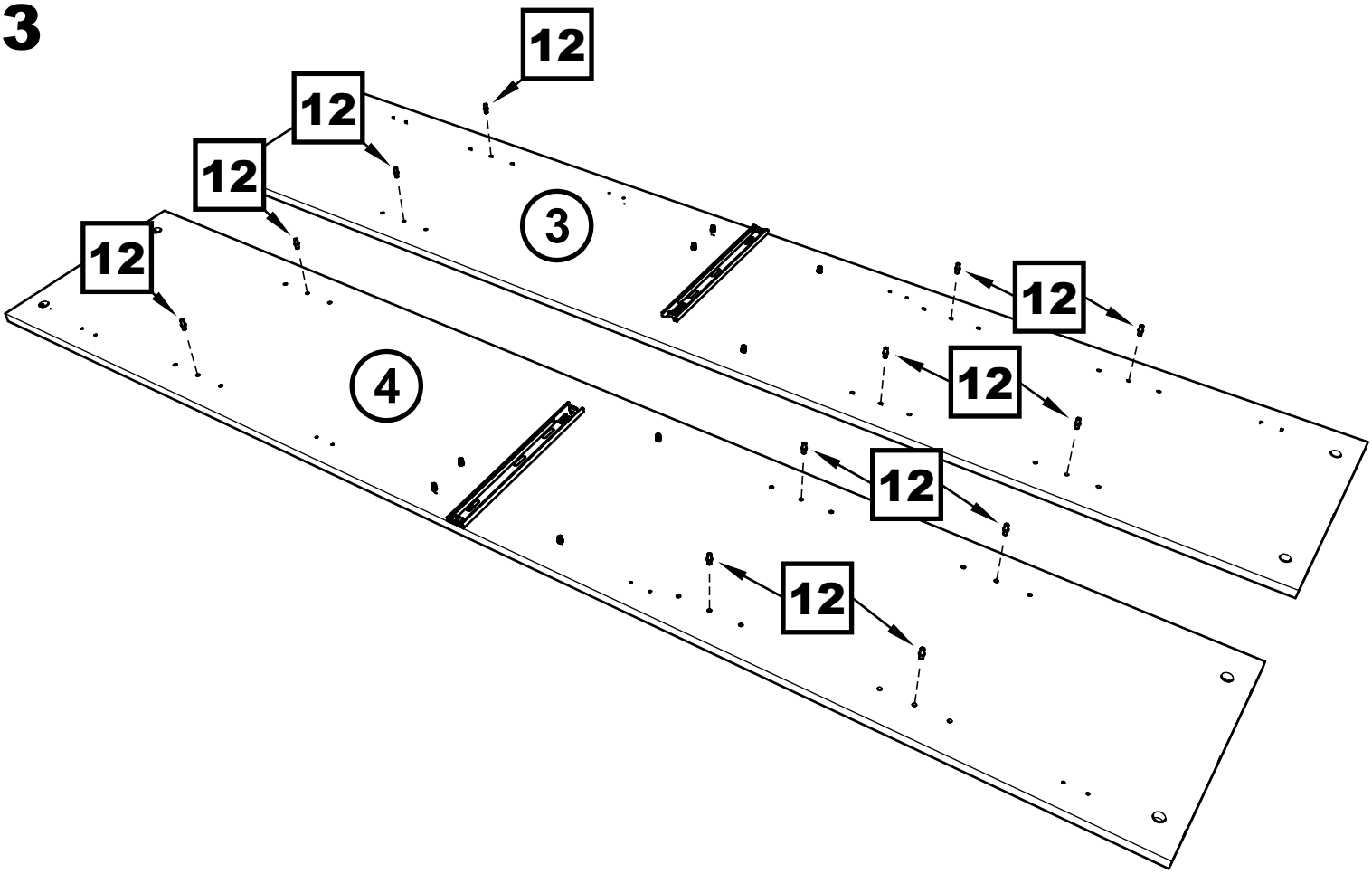

4

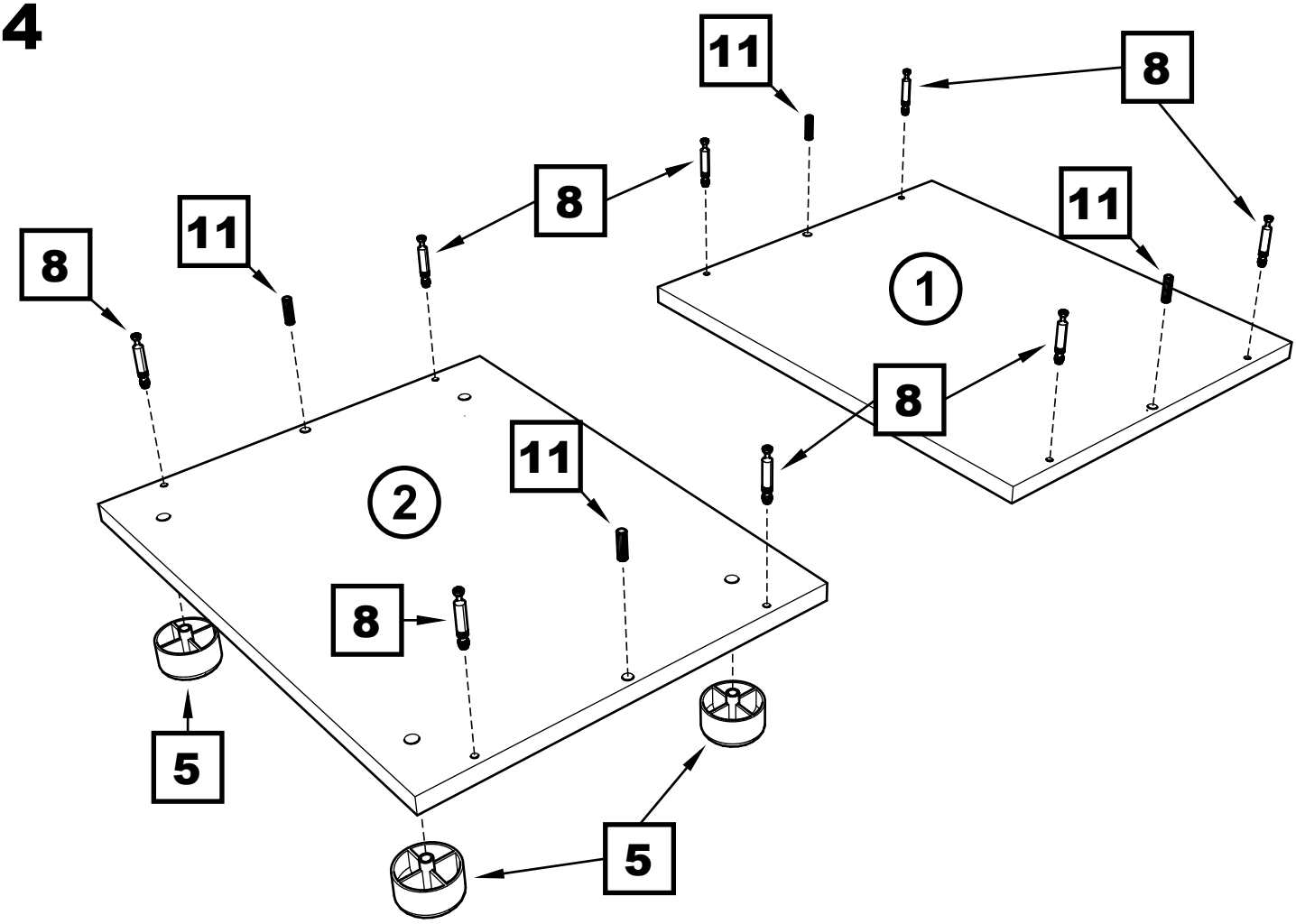

5

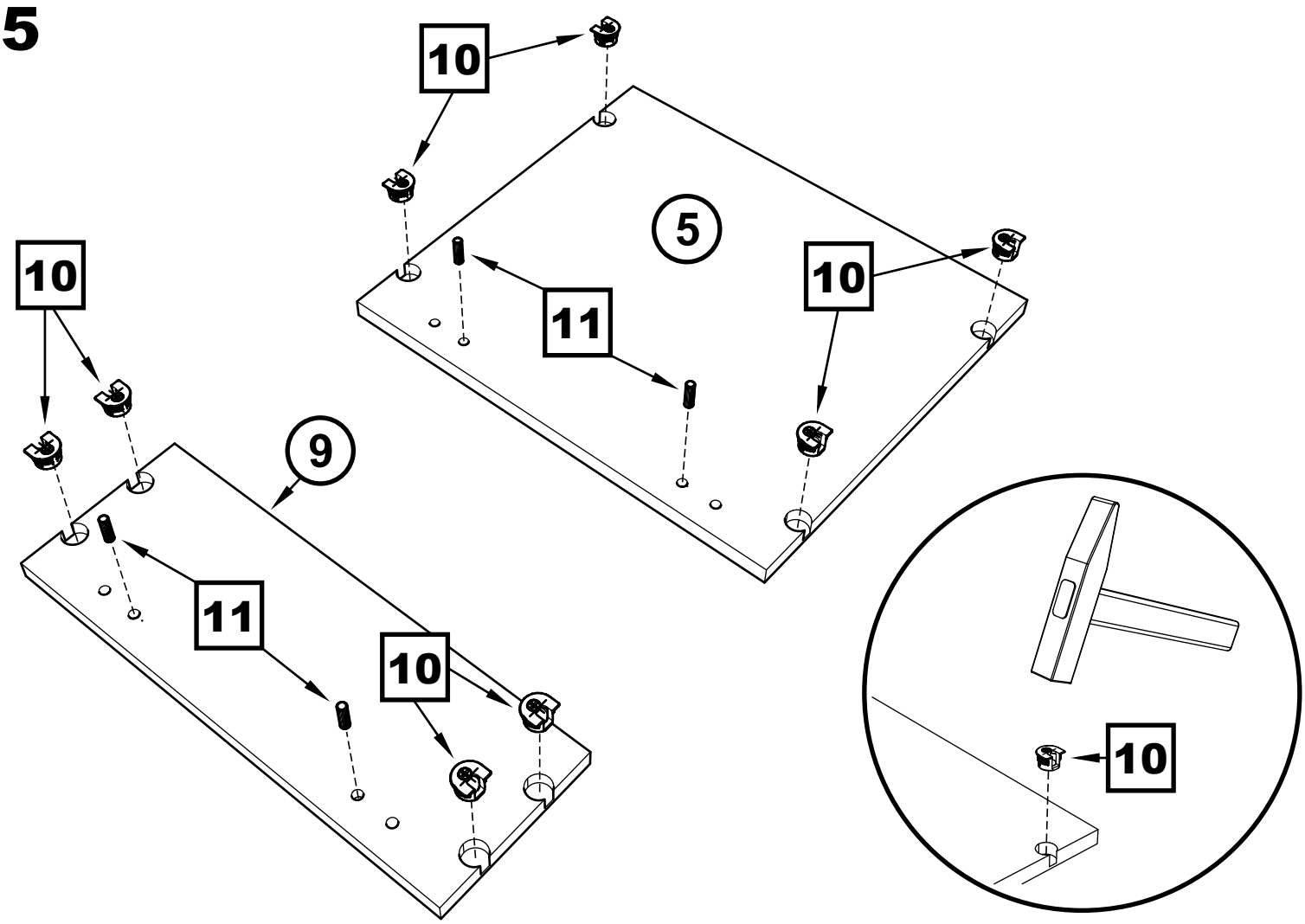

6

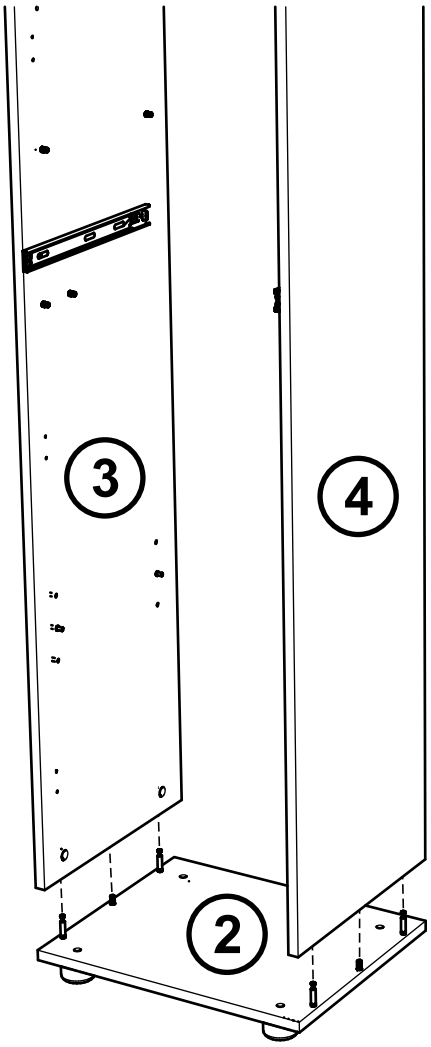

7

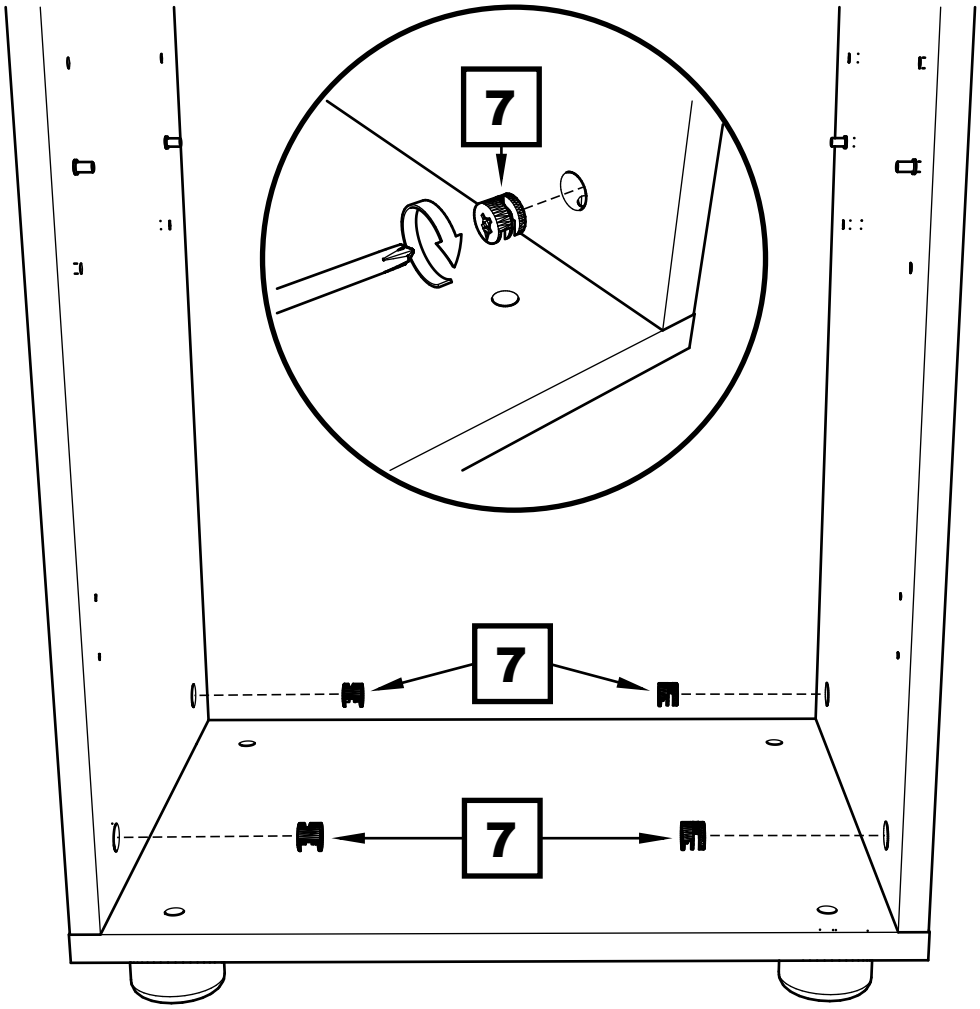

8

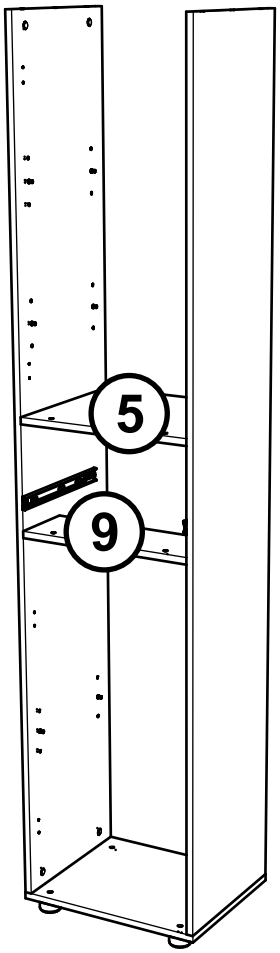

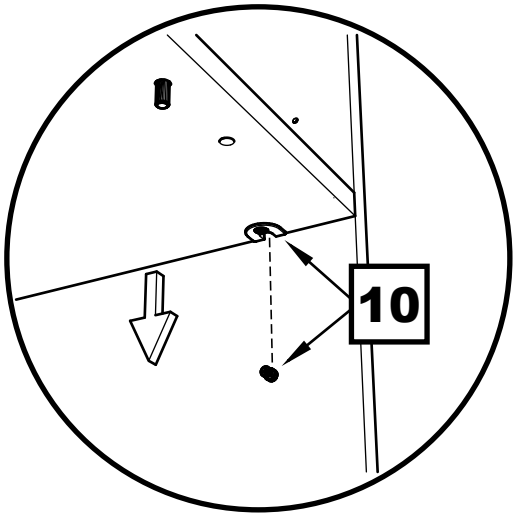

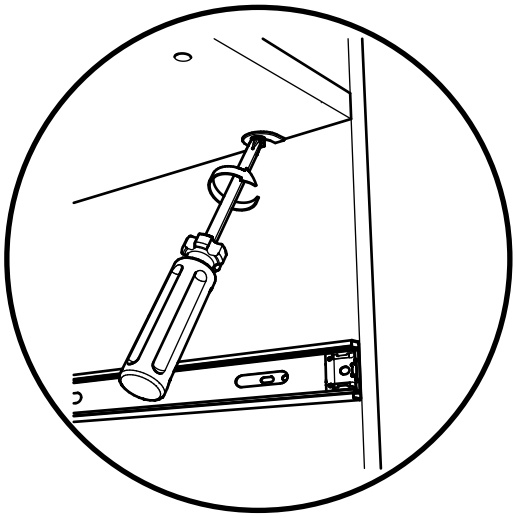

9

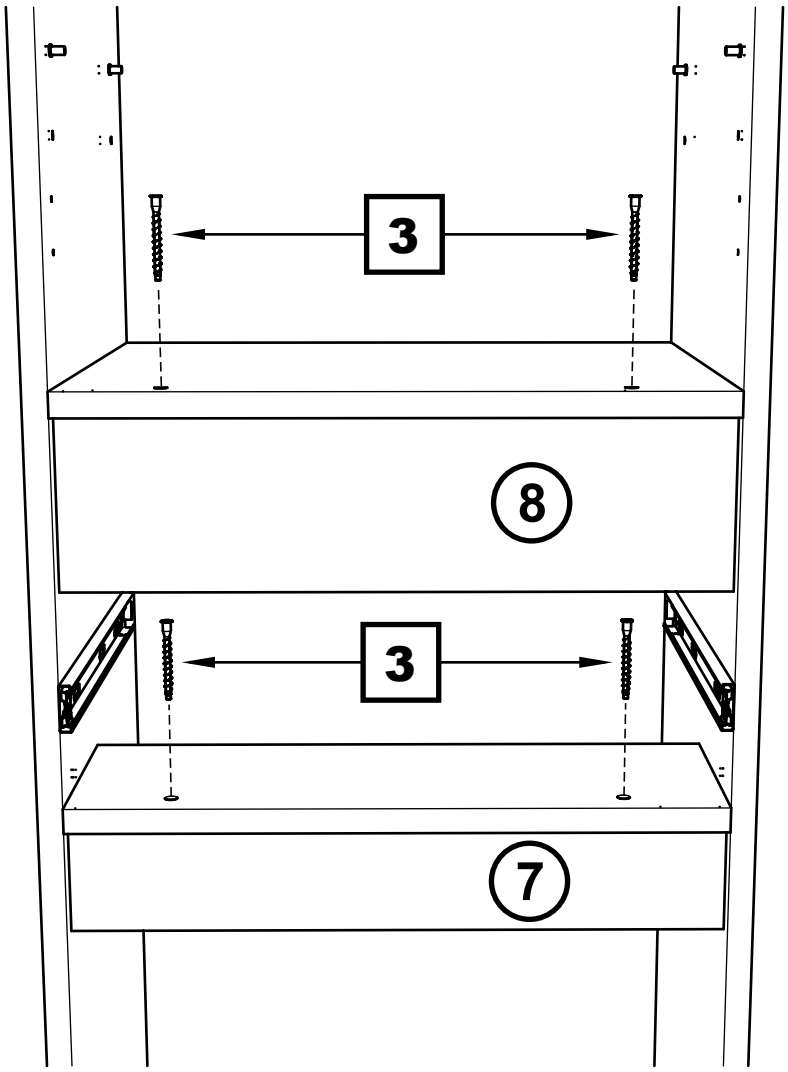

10

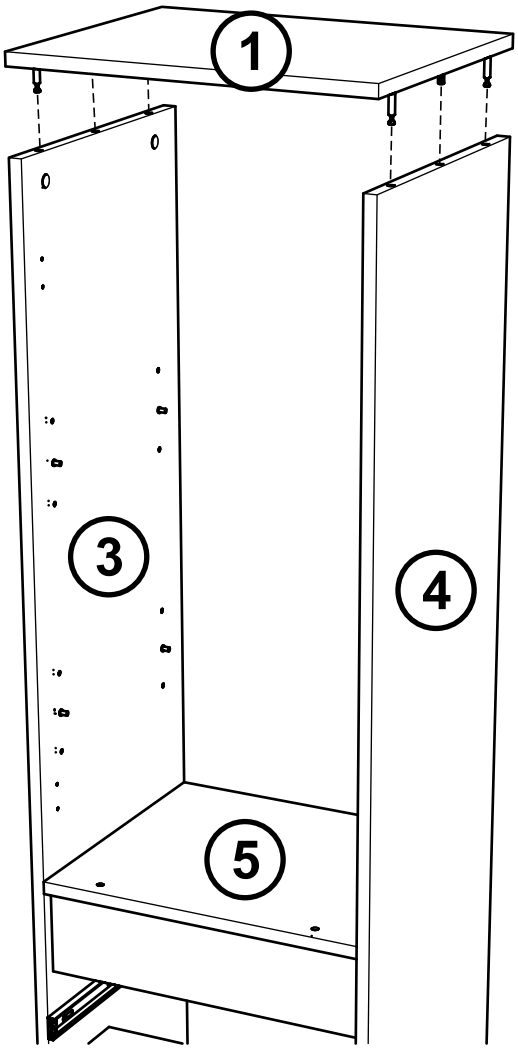

11

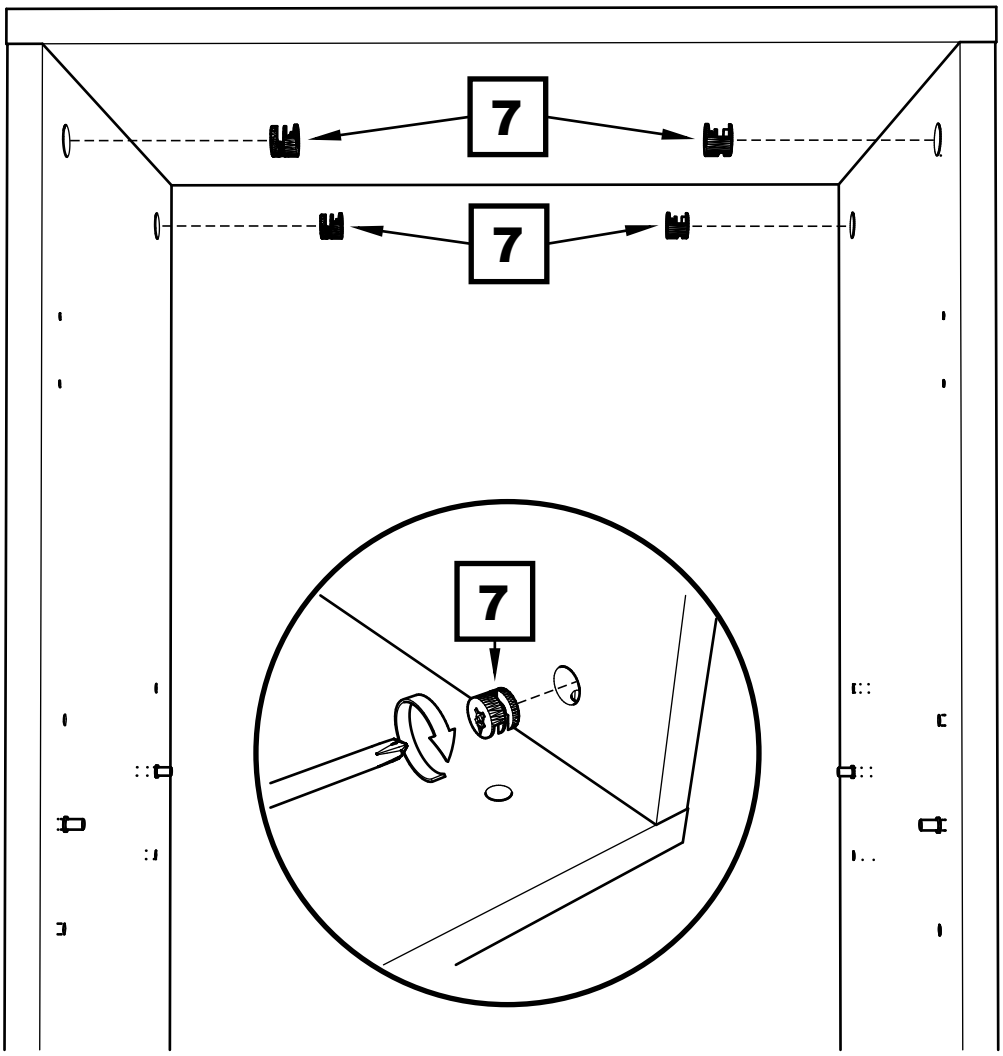

12

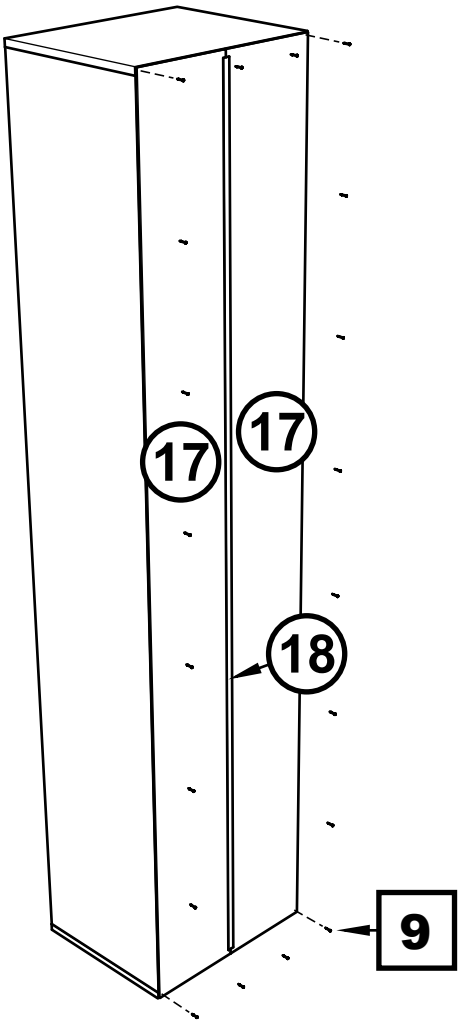

13

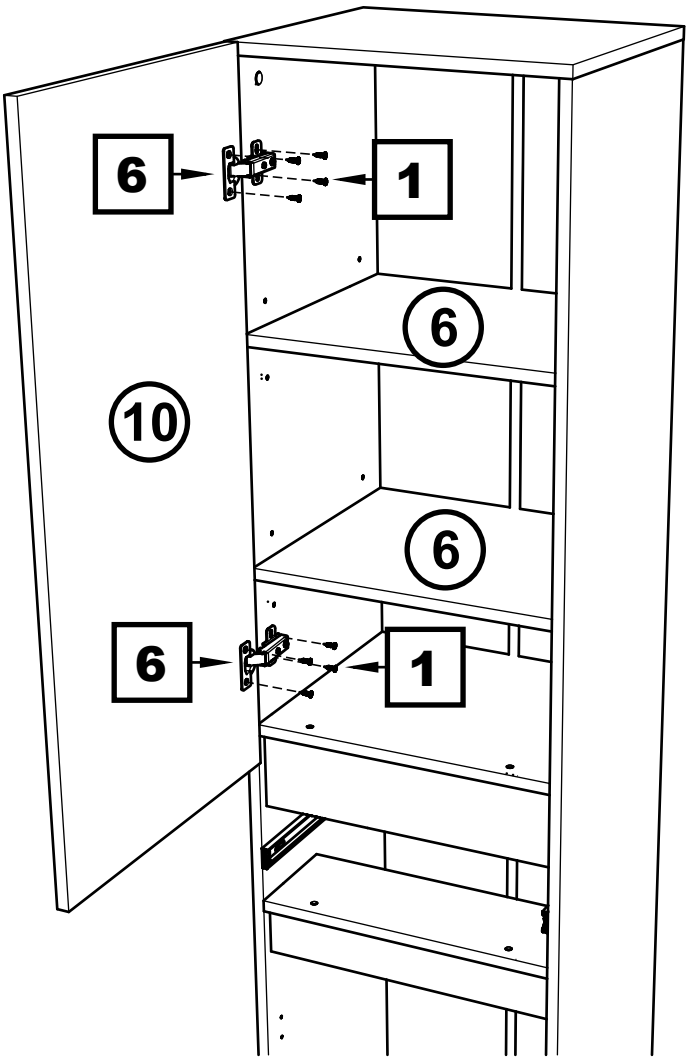

14

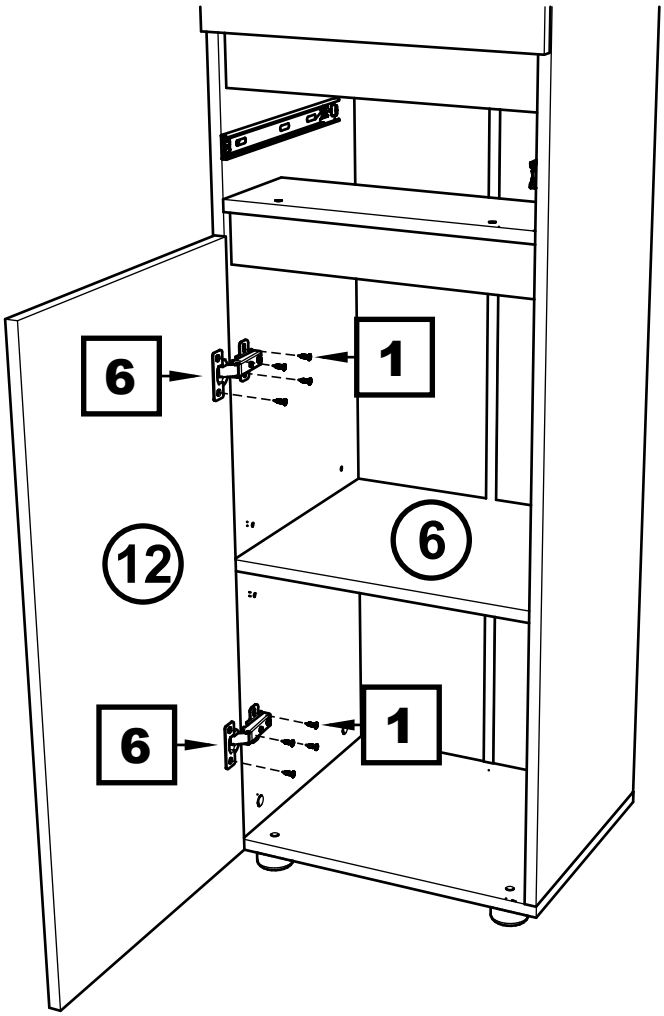

15

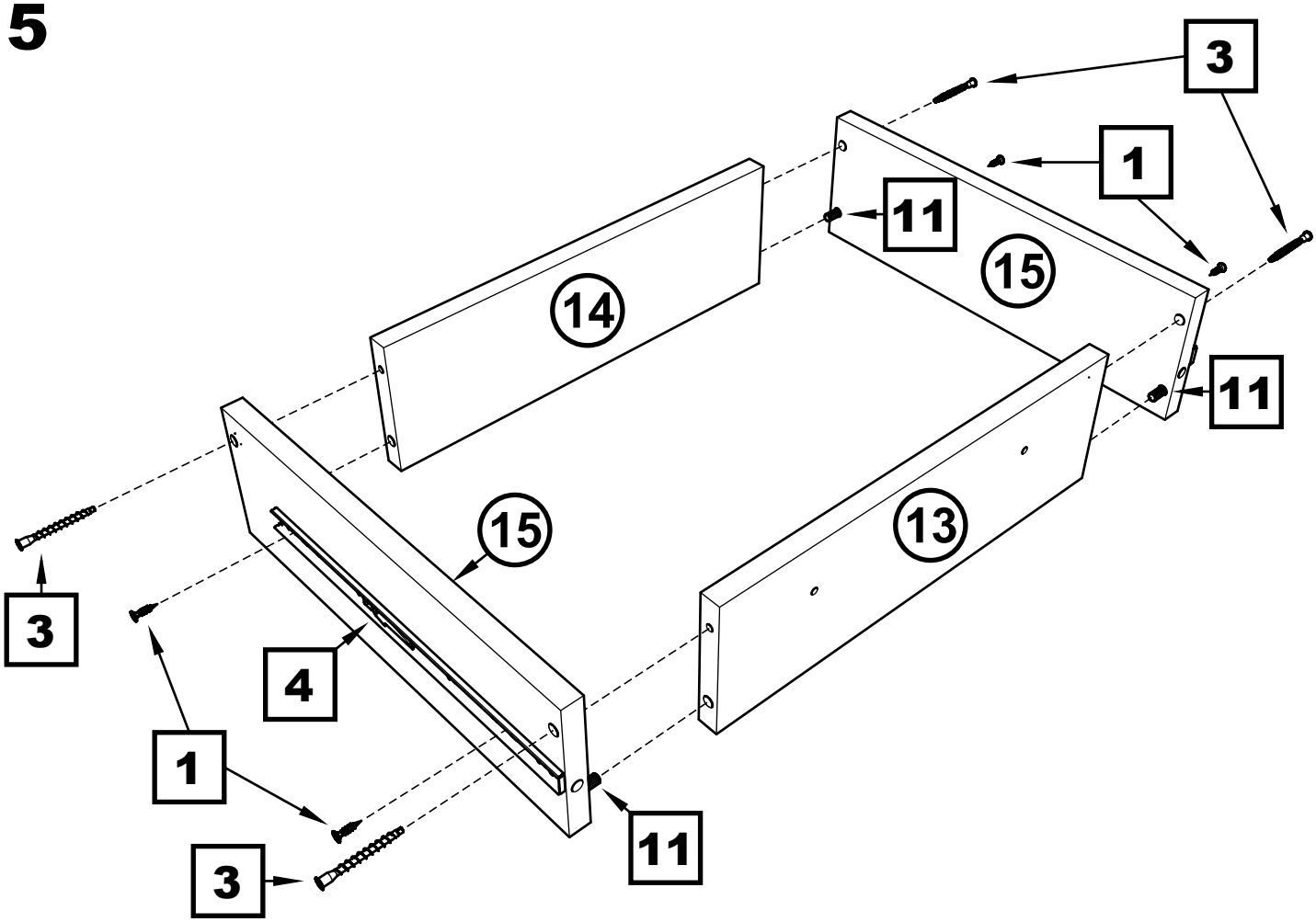

16

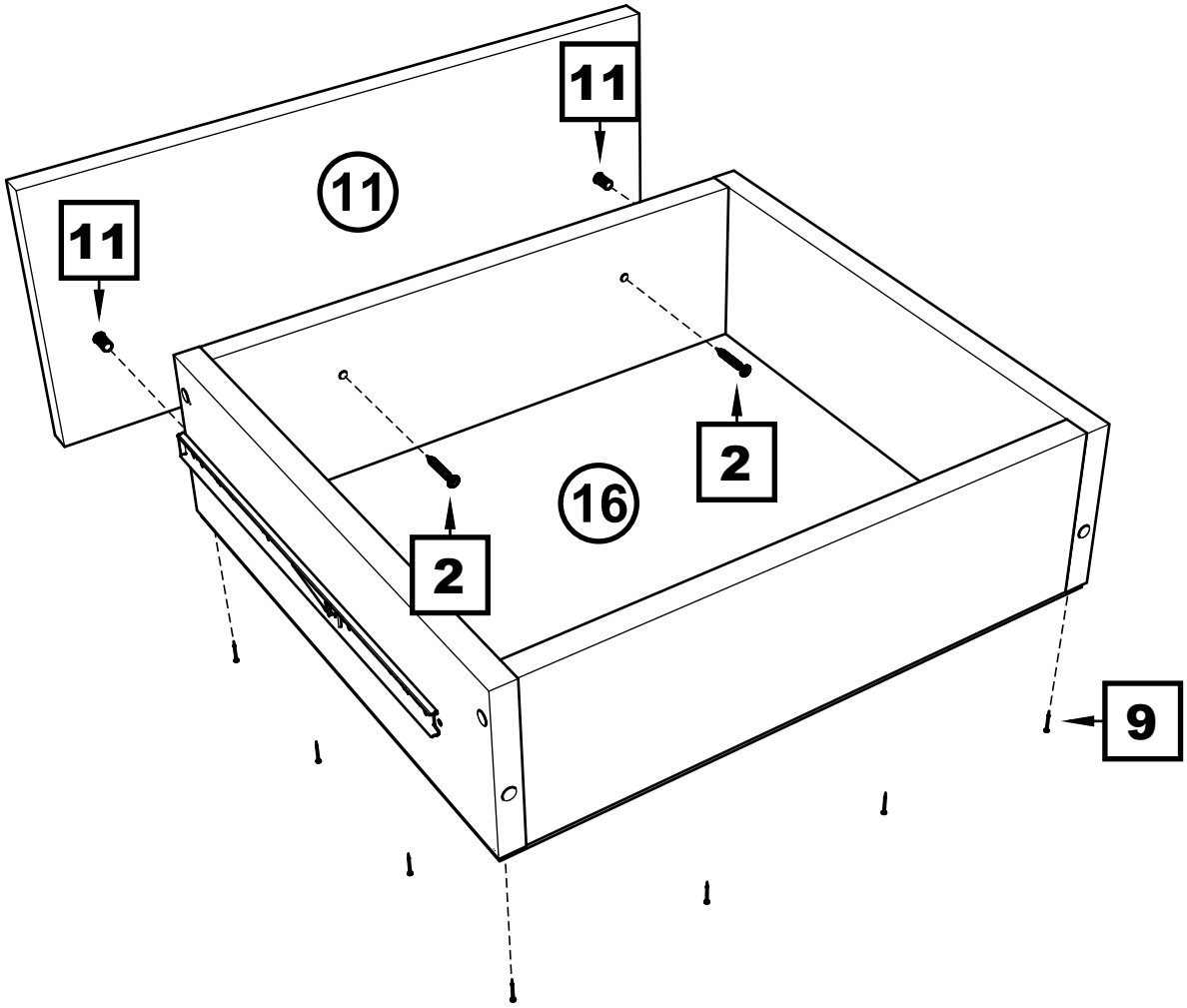
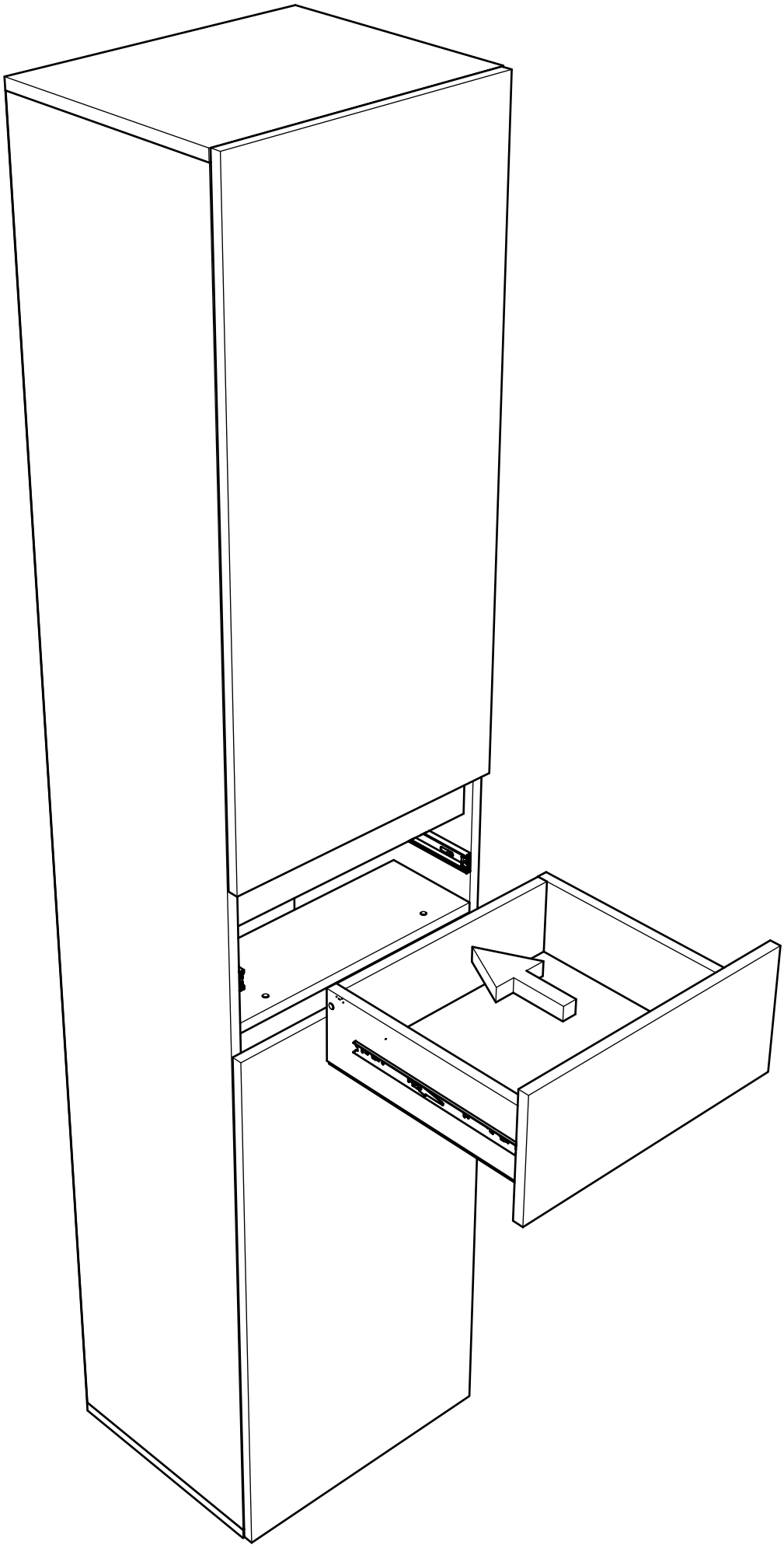
17