Astronomical Multifunctional Timer FRT14 81

Passport, Operation Manual

1. Intended Use

The **FRT14 81** astronomical multifunctional timer (hereinafter referred to as the timer or device) is designed for automatic control of lighting (or other electrical equipment) using two independent contact groups without the need for light sensors, providing control based on the sunrise and sunset times according to the geographical location.

2. Timer Design

Power supply terminal
LCD display
Current data
Current time
Control buttons
Power supply terminal
Output contact

3. Technical Specifications

Type		FRT14 81
Standard compliance		EN/IEC 60730-1, EN/IRC 60730-2-7
Power supply terminals		A1, A2
AC/DC Power voltage, V		24-264
Rated frequency, Hz		50/60
Power consumption P, W		1
Supply voltage deviation, %		±10
Programming method		weekly, yearly, astronomical
Number of programs		40
Rated contact current In , A		16/250V AC1
Switching capacity	VA /AC1	4 000
	W/DC	384
Output contact		1 CO
Isolation voltage Ui, V		600
Operating mode		manual, automatic, holiday, random
Summer/Winter time		off, automatic switching
Error in Operation		≤1sec/day at 25°C
Battery life, years		3...10
Data readout		LCD display, with backlight switching
Protection level		IP20
Pollution level		3
Electrical wear resistance		10^5
Mechanical wear resistance		10^6
Section of the connected conductors, mm^2		0.5...1
Bolt tightening torque, Nm		0.5
DIN rail mounting		TN 35
Elevation above sea level, m		2 000
Operating temperature range, °C		-20...+55
Storage temperature, °C		-30...+70

4. Control Manual

See Figure 1

5. Settings Menu

Initial Setup
See Figure 2
When the timer is turned on for the first time (or after a reset), it is possible to set the anguage, date and time using the « » and «OK» buttons.

Sunrise and Sunset Time
See Figure 3
1. Select ASTRO and press «OK»;
2. Select TIME and press «OK»;
3. Sunrise time display;
4. Sunset time display;
5. Press «MENU» button to exit the settings.

Sunrise and Sunset Time for a Specific Day
See Figure 4
1. Select ASTRO and press «OK»;
2. Select SIMULATE and press «OK»;
3. Use the «▲▼» buttons to select the desired year, then press «OK»;
4. Use the «▲▼» buttons to select the desired month, then press «OK»;
5. Use the «▲▼» buttons to select the desired day, then press «OK»;
6. Sunrise time display;
7. Sunset time display;
8. Press «MENU» button to exit the settings.

Time Offset
See Figure 5
1. Select ASTRO and press «OK»;
2. Select OFFSET and press «OK»;
3. Adjust the sunrise time offset using the «▲▼» buttons, then press «OK»;
4. Adjust the sunset time offset using the «▲▼" buttons, then press «OK»;
5. Press «MENU» button to exit the settings.

Astronomical Mode Settings
See Figure 6
1. Select LANGUAGE and press «OK»;
2. Use the «▲▼» buttons to select the desired language and press «OK»;
3. Press «MENU» button to exit the settings.

Current Time Settings
See Figure 7
1. Select DAT/TIME and press «OK»;
2. Select TIME and press «OK»;
3. Set the desired hour using the «▲▼» buttons, then press «OK». The adjustment range is 0~23;
4. Set the desired minutes using the «▲▼» buttons, then press «OK». The adjustment range is 0~59;
5. Press «MENU» button to exit the settings. Press and hold «▲» for 0.5 seconds to quickly increase the value. Press and hold «▼» for 0.5 seconds to quickly decrease the value.

Date Settings
See Figure 8
1. Select DAT/TIME and press «OK»;
2. Select DATE in the main menu;
3. Select the desired year using the « » buttons, then press «OK». The adjustment range is 2000~2095;
4. Select the desired month using the «▲▼» buttons, then press «OK»;
5. Select the desired day using the «▲▼» buttons, then press «OK»;
6. Press «MENU» button to exit the settings.

Geographical Location Settings
See Figures 9 and 22
1. Select ASTRO and press «OK»;
2. Select POSITION and press «OK»;
3. Select LATITUDE and press «OK»;
4. Choose SOUTH or «NORTH» and press «OK». SOUTH: southern hemisphere, NORTH: northern hemisphere
5. Set the latitude degrees using the «▲▼» buttons, then press «OK».
6. Set the latitude minutes using the «▲▼» buttons, then press «OK».
7. Press «MENU» button to confirm the settings;
8. Select ONGITUD and press «OK»;
9. Choose EAST or WEST and press «OK». EAST: eastern hemisphere, WEST: western hemisphere;
10. Set the longitude degrees using the «▲▼» buttons, then press «OK»;
11. Set the longitude minutes using the «▲▼» buttons, then press «OK»;
12. Press «MENU» button to confirm the settings;
13. Select T-ZONE to set the time zone, and press «OK»;
14. Use the «▲▼» buttons to select the desired time zone and press «OK». The time zone range is -12…+12;
15. Press «MENU» button to confirm the settings;
16. Astronomical setting is complete.

Main Menu
See Figure 10
1. Press the «MENU» button to enter the main menu;
2. Use the «▲▼» buttons to select the desired menu option;
3. If there is no activity for 1 minute, the timer will automatically exit the menu.

Summer/Winter Time Settings
See Figure 11
1. Select DAT/TIME and press «OK»;
2. Select SU-WI and press «OK»;
3,4,5,6. Use the «▲▼» buttons to select the desired daylight saving time option and press «OK»;
1. Select the start month for daylight saving time and press «OK»;
2. Select the start day for daylight saving time and press «OK»;
3. Select the start month for standard winter time and press «OK»;
4. Select the start day for standard winter time and press «OK»; 11,12,13,14. Press «MENU» button to exit the settings.

Setting HOLIDAY Mode
See Figure 12
1. Select MODES and press «OK»;
2. Select HOLIDAY mode and press «OK»;
3. To activate, select «ON» and press «OK»;
4. Set the year the holiday starts using the «▲▼» and press «OK»;
5. Set the month the holiday starts using the «▲▼» and press «OK»;
6. Set the day the holiday starts using the «▲▼» and press «OK»;
7. Set the year the holiday ends using the «▲▼» and press «OK»;
8. Set the month the holiday ends using the «▲▼» and press «OK»;
9. Set the day the holiday ends using the «▲▼» and press «OK»;
10. Select HOLIDAY in the menu. Press the "MENU" button to exit the settings;
11. To deactivate holiday mode, select "»OFF» and press «OK»;
12. Select HOLIDAY in the menu. Press the «MENU» button to exit the settings.

Language Selection
See Figure 13
1. Select LOPTIONS and press «OK»;
2. Select LANGUAGE: and press «OK»;
3. Use the «▲▼» buttons to select the desired language and press «OK»;
4. Press «MENU» to exit the settings.

Setting a New Program
See Figure 14
1. Select PROGRAM and press «OK»;
2. Select NEW and press «OK»;
3. Choose an available space in memory;
4. Select a new program number and press «OK». When the program memory is full, the «FULL» symbol will appear on the screen, and you will be unable to create the new program;
5. Select the ON/OFF mode;
6. Select the PULSE mode;
7. Open the status of output channel 1. Use the «▲▼» buttons to select OUT-ON or OUT-OFF and press «OK»;
8,12. Use the «▲▼» buttons to set the hour and press «OK»;
9,13. Use the «▲▼» buttons to set the hour and press «OK»;
10,15. Set the program's activity on weekdays (Monday to Sunday) using the «▲▼» buttons. If YES is selected, the program will run on the flashing day. If NO is selected, the program will not run on the flashing day.
11,16. Press the «MENU» button to go back to the previous menu;
14. Set the pulse duration, the setting range is 1-99 seconds

Changing an Installed Program
See Figure 15
1. Select PROGRAM and press «OK»;
2. Select REVIEW and press «OK»;
* Repeat the actions described in the previous step.

Deleting Programs
See Figure 16
1. Select PROGRAM and press «OK»;
2. Select DELETE and press «OK»;
3. Select SINGLE to delete one program and press «OK»;
4. Use the «▲▼» buttons to select the program you wish to delete and press «OK»;
5. Confirm by selecting YES or cancel by selecting NO using the «▲▼» buttons and press «OK»;
6. The selected program will appear on the screen. Use the «▲▼» buttons to make any changes and press «OK». To choose a program number, press «MENU»;
7. Press «MENU» to go back to the previous menu or exit the settings;
8. To delete all programs, select ALL, and then press «OK»;
9. Confirm by selecting YES or cancel by selecting NO using the «▲▼» and press «OK»;
10. Press «MENU» to go back to the previous menu or exit the settings;
11. Program setting is complete.

Reviewing Installed Programs
See Figure 17
1. Select PROGRAM and press «OK»;
2. Select REVIEW and press «OK»;
3. Use the «▲▼» to review the installed programs, pressing «OK» to select;
4. Press «MENU» to exit the settings.

Automatic Mode Settings
See Figure 18
1. Select MODES and press «OK»;
2. Select AUTO and press «OK»;
3. Select CHANNEL1 using the «▲▼» buttons and press «OK».
4. Choose either AUTO or RANDOM modes using the «▲▼» buttons and press «OK». The activation/deactivation range is 1-30 minutes;
5. Press «MENU» to exit the settings.

Manual Mode Settings
See Figure 19
1. Select MODES and press «OK»;
2. Select MANUAL and press «OK»;
3. Open the status of output channel 1. Use the «▲▼» to select «ON» or «OFF», then press «OK»;
4. Press «MENU» to exit the settings.

Operating Time
See Figure 20
1. Select OPTIONS and press «OK»;
2. Select the H-COUNT submenu and press «OK»;
3. Choose SHOW or CLEAR using the «▲▼» buttons, then press «OK»;
4. Open operating time. The minimum time unit is one hour. Press «OK» to exit after reviewing;
5. Press «MENU» to exit the settings.

Backlight Settings
See Figure 21
1. Select OPTIONS and press «OK»;
2. Select LIGHT and press «OK»;
3. Select ON (always on) or 2 MIN (automatically turns off after 2 minutes of inactivity) using the «▲▼» buttons and press «OK»;
4. Press «MENU» to exit the settings.

CReset and Manual Control
See Figure 22
Pressing all four buttons at the same time for 3 seconds will reset all user settings and programs to the factory defaults.
When the «▲▼» are pressed simultaneously, the output status of channel 1 will change to MANUAL.
Manual mode is automatically activated when the output states of other operating modes are changed.

6. Circuit and Wiring Diagrams

See Figure 23

7. Dimensions

See Figure 24

8. Installation and Maintenance

The timer is mounted in a plastic or installation box on a standard 35 mm DIN rail using two-position fasteners.
Connect the power conductors to the timer terminals A1 and A2. The timer's normally open output contacts (terminal 18 – normally open; 16 – normally closed; 15 – common) are connected in series with the phase conductor of the load power supply or in series with the power conductor of the actuator element of the switching device, for example, the contactor control coil.

9. Safety Requirements

The product must be operated under the following environmental conditions:
- explosion-proof;
- free from aggressive gases and vapors in concentrations that could damage metals and insulations;
- not saturated with conductive dust or vapors;
- no direct exposure to ultraviolet radiation.

Installation, setup and connection must only be performed by qualified electrical personnel with at least a level III electrical safety group, who are familiar with this operation manual.

The product must be installed and connected with the power turned off.

Any use of the product under conditions different from those outlined in Section 3 of this manual must be approved by the manufacturer.
It must be installed in switchboards with at least protection class I and a protection level of at least IP30.
Failure to follow this manual may result in improper operation, electric shock, or fire.

10. Transport and Storage Conditions

The product can be transported in its original packaging by any covered transport, provided it is protected from moisture.
The product should be stored only in the manufacturer's packaging, in self-ventilated rooms, at an ambient temperature between -30 and+70°C, with a relative humidity of 80% at 25°C, and without condensation.

11. Package Contents

The product package includes:
- 1 x Astronomical Multifunctional Timer FRT14 81;
- 1 x packaging box;
- 1 x passport, operation manual.

12. Warranty Liability

The average service life is 15 years, provided the consumer follows the requirements for operation, transportation and storage.
The warranty period for the product is 5 years from the date of sale, provided the consumer follows the requirements for operation, transportation and storage.
The warranty does not apply to products with:
- mechanical damage;
- other damage caused by improper transportation, storage, installation, connection, or improper operation;
- signs of unauthorized opening and/or repairs.

During the warranty period and technical support, please contact: **https://promfactor.com**

13. Disposal

The product should not be disposed of with household waste. It must be taken to organizations that handle the disposal of electrical equipment.

Control Manual

Figure 1

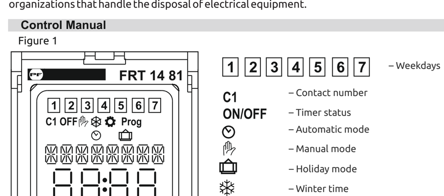

Settings Menu

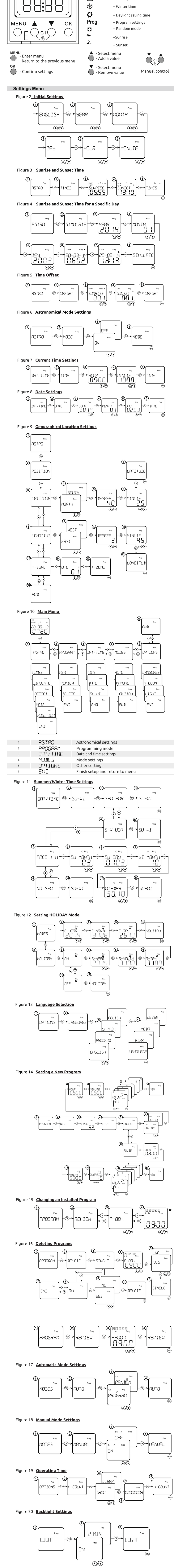

Figure 22 **Geographical Location Settings**

City	Latitude		Longitude	
Bialystok	53.129744	53° 7' 56" c.	23,16884	23° 10' 7"
Lublin	51,246454	51° 14' 47" c.	22,568446	22° 34' 6" c.
Rzeszow	50,041187	50° 2' 28" c.	21,99912	21° 59' 56" c.
Krakow	50,06465	50° 3' 52" c.	19,94498	19° 56' 41" c.
Katowice	50,264892	50° 15' 53" c.	19,023782	19° 1' 25" c.
Wroclaw	51,107885	51° 6' 28" c.	17,038538	17° 2' 18" c.
Kielce	50.866077	50° 51' 57" c.	20.628568	20° 37' 42" c.
Lodz	51.759248	51° 45' 33" c.	19.455983	19° 27' 21" c.
Warszawa	52.229676	52° 13' 46" c.	21.012229	21° 0' 44" c.
Poznan	52.406374	52° 24' 22" c.	16.925168	16° 55' 30" c.
Bydgoszcz	53.123480	53° 7' 24" c.	18.008438	18° 0' 30" c.
Szczecin	53.428544	53° 25' 42" c.	14.552812	14° 33' 10" c.
Gdansk	54.352025	54° 21' 7" c.	18.646638	18° 38' 47" c.
Gdynia	54.518890	54° 31' 8" c.	18.530541	18° 31' 49" c.
Olsztyn	53.778422	53° 46' 42" c.	20.480119	20° 28' 48" c.
Chisinau	47.010453	47° 0' 37 " c.	28.863810	28° 51' 49" c.
Crasnoe	46.643264	46° 38' 35" c.	29.828687	29° 49' 43" c.
Balti	47.753995	47° 45' 14" c.	27.918415	27° 55' 6" c.
Iasi	47.158455	47° 9' 30" c.	27.601442	27° 36' 5" c.
Galati	45.435321	45° 26' 7" c.	28.007994	28° 0' 28" c.
Constanta	44.159801	44° 9' 35" c.	28.634814	28° 38' 5" c.
Bucuresti	44.426767	44° 25' 36" c.	26.102538	26° 6' 9" c.
Craiova	44.330179	44° 19' 48" c.	23.794881	23° 47' 41" c.
Targu Mures	46.538586	46° 32' 18" c.	24.551439	24° 33' 5" c.
Cluj-Napoca	46.771210	46° 46' 16" c.	23.623635	23° 37' 25" c.
Timisoara	45.748872	45° 44' 55" c.	21.208679	21° 12' 31" c.
Oradea	47.046501	47° 2' 47" c.	21.918944	21° 55' 8" c.
Varna	43.185953	43° 11' 9	27.938232	27° 56' 17
Burgas	42.476959	42° 28' 37	27.476807	27° 28' 36
Plovdiv	42.152001	42° 9' 7	24.752197	24° 45' 7
Sofia	42.687281	42° 41' 14	23.345947	23° 20' 45

Circuit and Wiring Diagrams

Figure 23

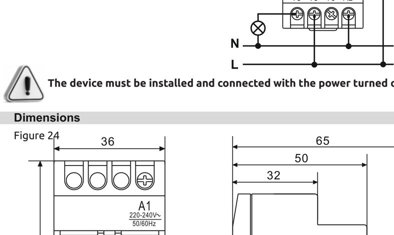

The device must be installed and connected with the power turned off.

Dimensions

Figure 24

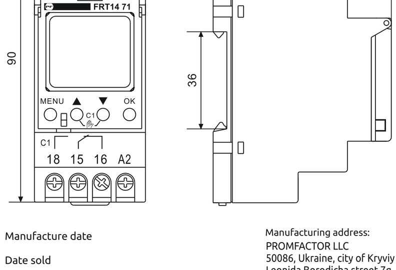

Manufacture date

Date sold

Manufacturing address:
PROMFACTOR LLC
50086, Ukraine, city of Kryviy Rih,
Leonida Borodicha street 7g,
Tel: +380 67 730 99 80
e-mail: s.promfactor@gmail.com