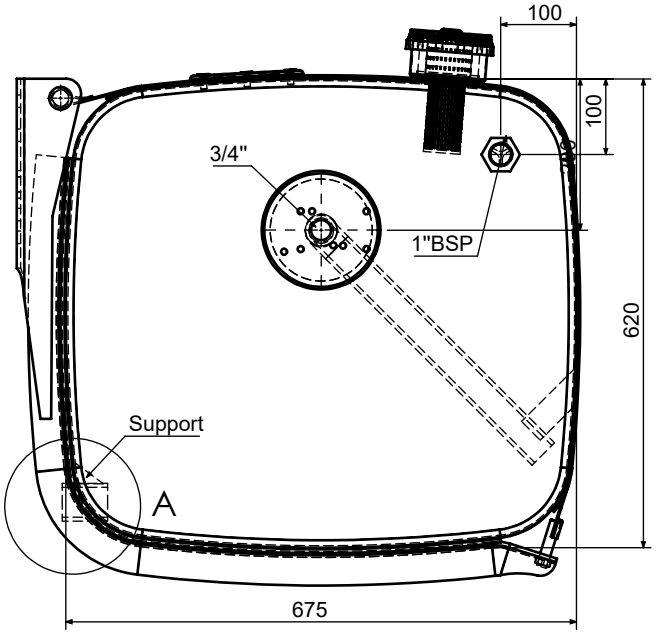

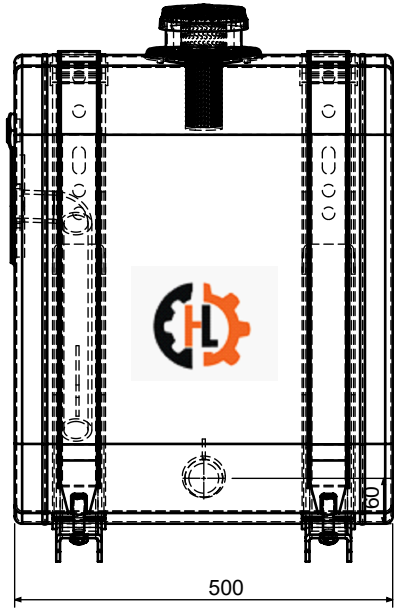

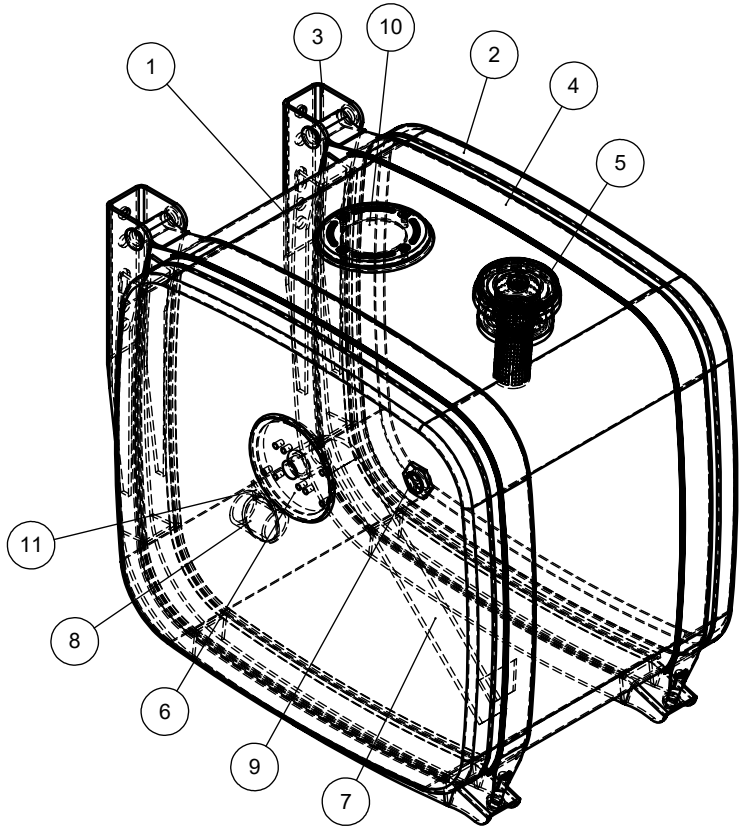

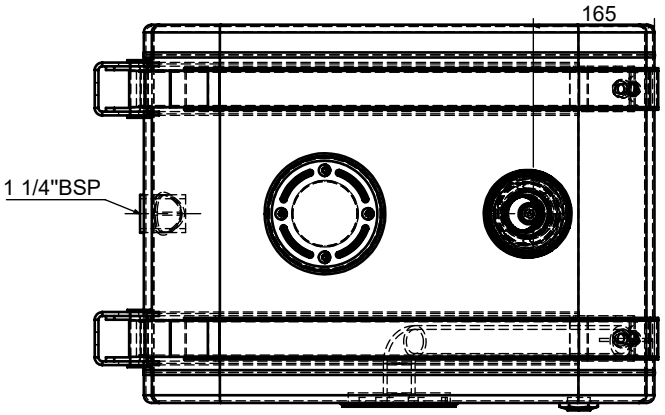

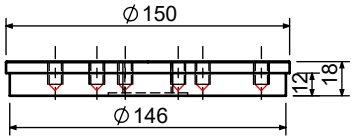

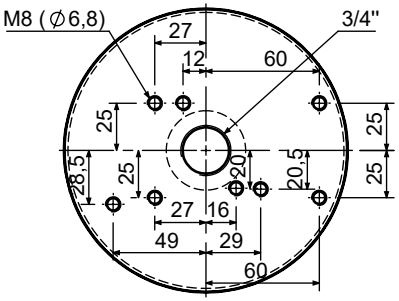

FLANGE DETAIL

SUPPORT PART WELDED

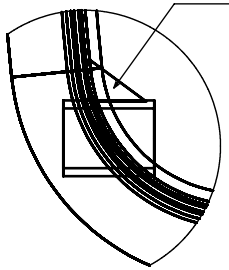

DETAY A
ÖLÇEK 1 : 5

ITEM	QTY	DENOMİNATİON
1	1	Tank Body - 2,5 mm Aluminum
2	2	Side plate - 2,5 mm Aluminum
3	2	Bracket Steel - 6mm
4	2	Belt - 2 mm Chromium
5	1	Filling Neck
6	1	Side Flange 3/4"
7	1	Return Pipe
8	1	Suctıon Adapter 1 1/4" BSP
9	1	Level İndicatör 1" BSP
10	1	Alumunum cover
11	1	Support

	Name Surname	Date	Signature	Weight:	
Draw	Murat Oktay	19/06/2019		Material:Alumınum	Düzce Sağlam Depo
Control				Part Name: 620X670X500 / 200 Liter	
Scale	1/10			Explanation:SIDE FLANGED HYRAULIC TANK	