FHR 3L ROTATOR

STATIC LOAD 30 kN

DYNAMIC LOAD 15 kN

TORQUE at 25MPa 900 Nm

OILFLOW 20 l/min

WEIGHT 18 kg

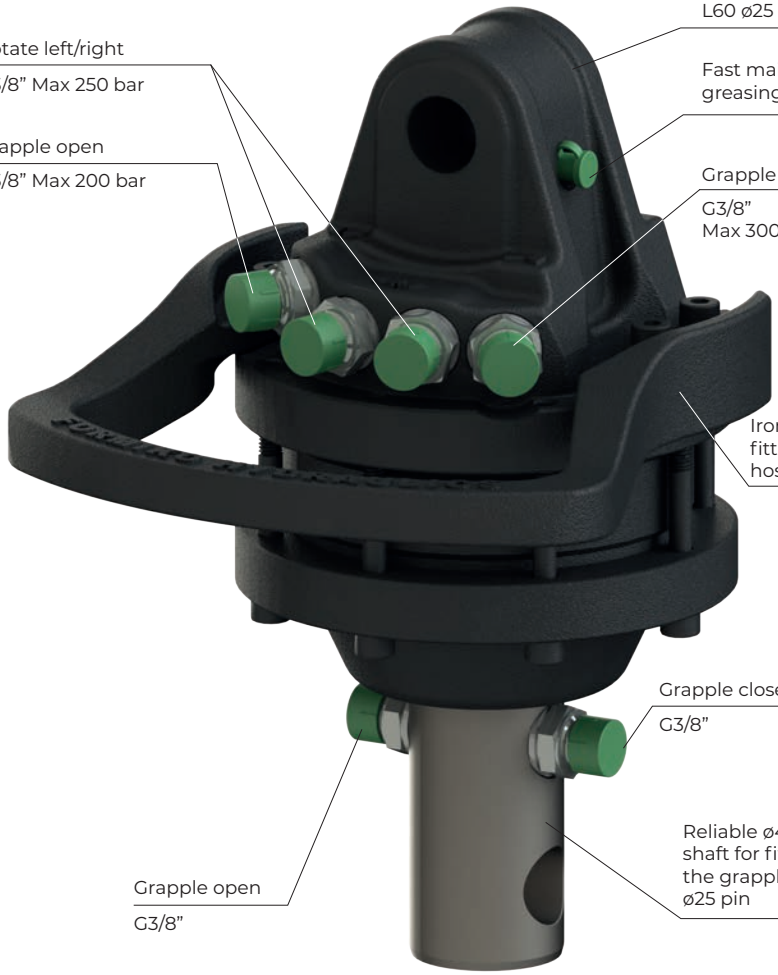

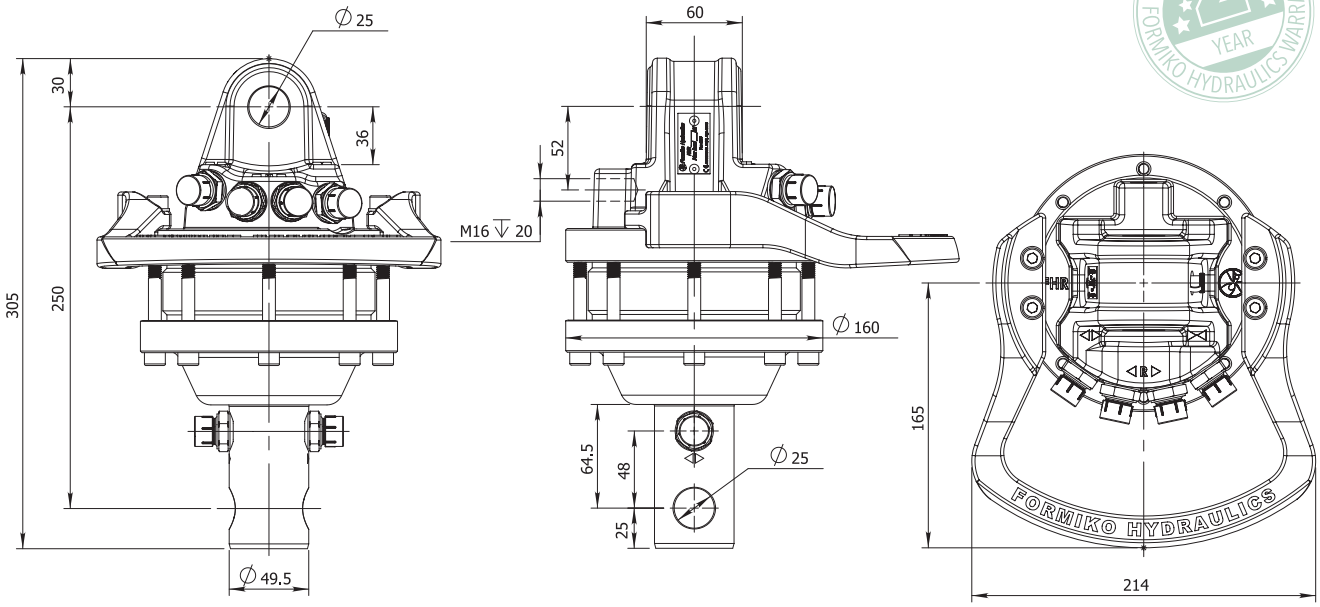

FORESTRY · AGRICULTURE · CONSTRUCTION · GENERAL CARGO · RECYCLING