bairan ···for all climates around the world

Installation - and maintenance instruction

ST 108 PL ST 120 PL

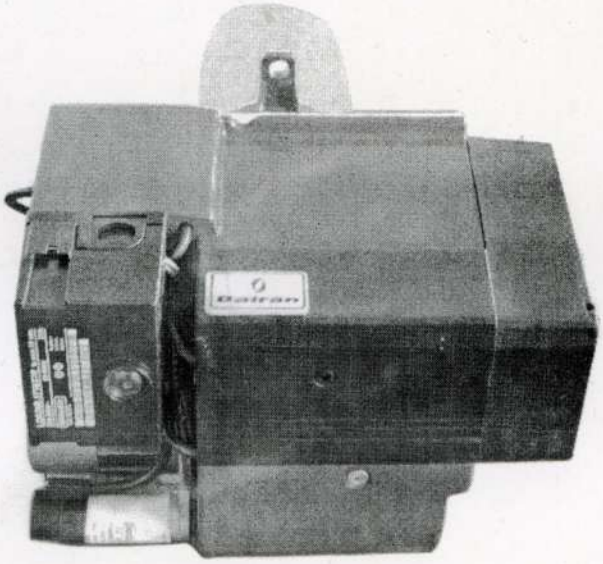

DESCRIPTION

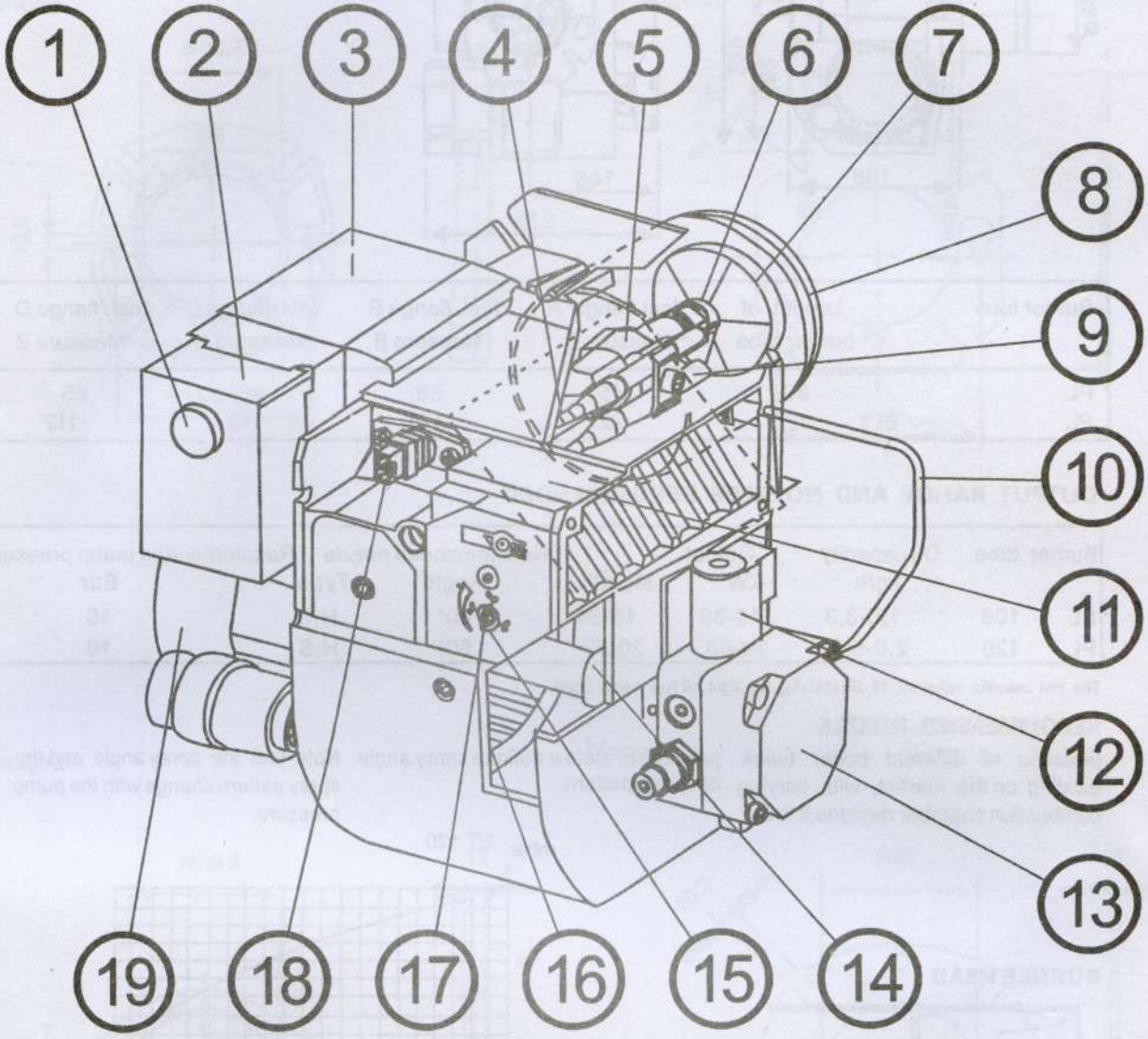

COMPONENTS

1. Reset button
2. Control box
3. Ignition transformer
4. Ignition cables
5. Nozzle assembly
6. Nozzle
7. Brake plate
8. Blast tube
9. Ignition electrodes
10. Connecting pipe
11. Air damper
12. Solenoid valve
13. Pump
14. Drive coupling
15. Indication, air damper
16. Fan wheel
17. Adjustment, air damper
18. Photoresistor
19. Motor

TECHNICAL DATA

ST 108 PL 6-7-19-10
ST 120 PL 6-7-19-10
DIMENSIONS

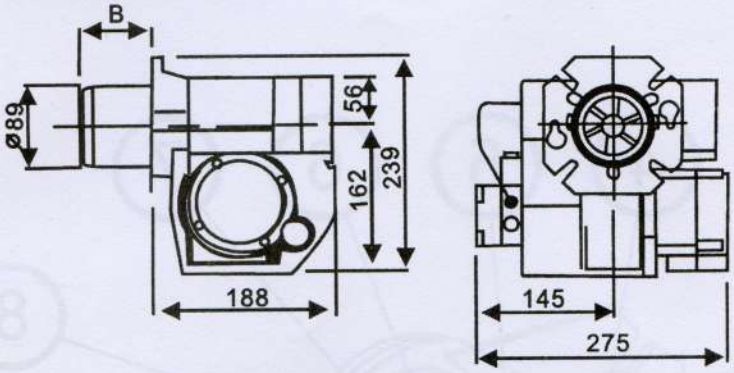

Burner tube	Length of burner tube	Incl.flange A Measure B	Incl. flange B Measure B	Incl. flange C Measure B	Incl. flange D Measure B
PL	80	45	58	66	65
PL	127	92	125	113	112

OUTPUT RANGE AND NOZZLES RECOMMENDED

Burner tube		Oil capacity kg/h	Output kW	Mcal/h	Recommended nozzle Angle	Type	Recommended pump pressure Bar
PL	108	1,5-3,3	18-39	15-34	80°	H,S	10
PL	120	2,0-5,6	24-66	20-57	80°	H,S	10

The net calorific value of 11,86 kWh/kg for light oil has been used.

RECOMMENDED NOZZLE

Because of different boiler types existing on the market, with varying combustion chamber designs,it is not possible to state a definite spray angle or spray pattern.

Note that the spray angle and the spray pattern change with the pump pressure.

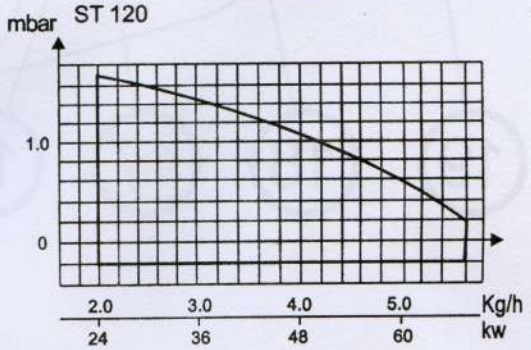

BURNER HEAD

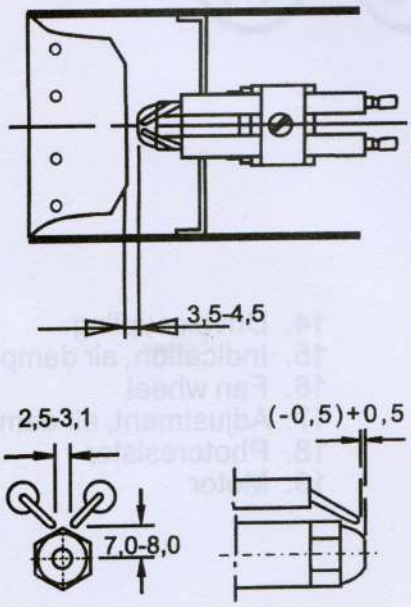

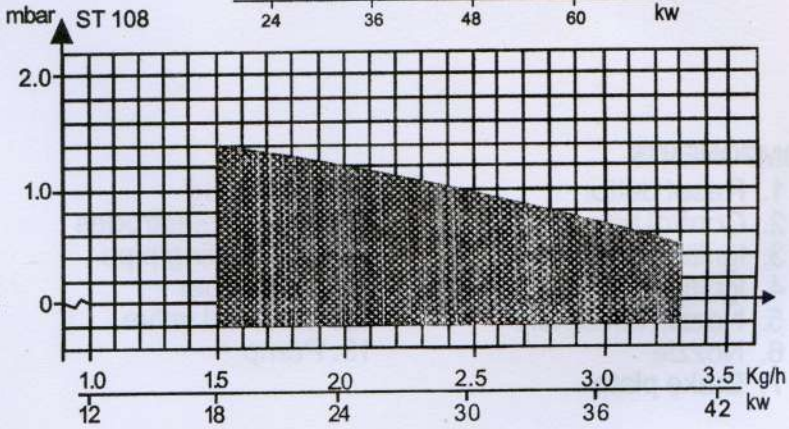

TECHNICAL DATA

DIMENSIONS

Flange A

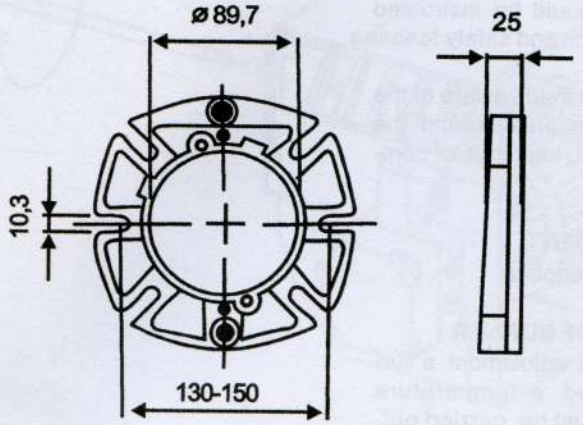

Flange C

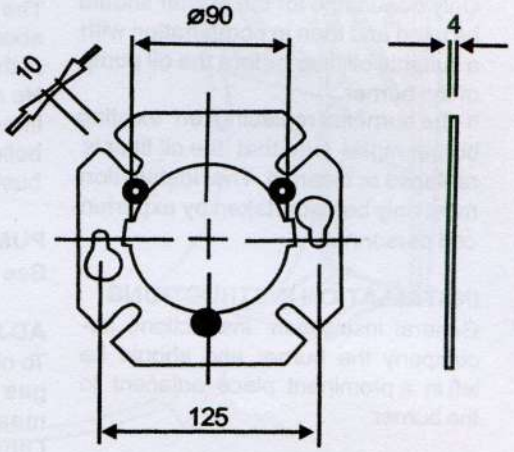

Flange B

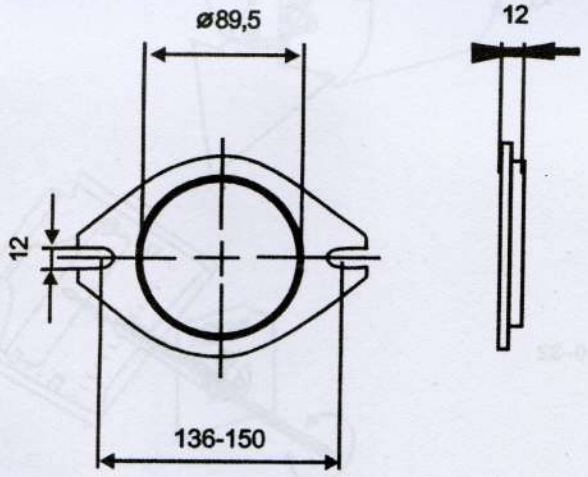

Flange D

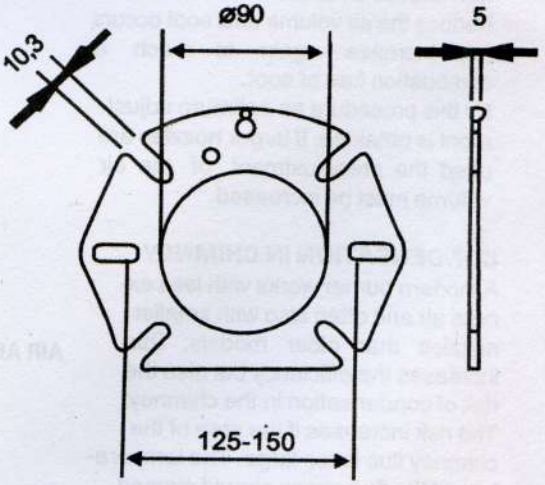

GENERAL INSTRUCTIONS

GENERAL RULES

The installation of an oil burner should be carried out in accordance with local regulations. The installer of the burner must therefore be aware of all regulations relating to oil and combustion.

Only oil suitable for the burner should be used and then in combination with a suitable oil filter before the oil pump of the burner.

If the burner is replacing an existing burner make sure that the oil filter is replaced or cleaned. The installation must only be undertaken by experienced personnel.

INSTALLATION INSTRUCTIONS

General installation instructions accompany the burner and should be left in a prominent place adjacent to the burner.

ADJUSTMENT OF BURNER

The burner is from the factory pre-set to an average value that must then be adjusted to the boiler in question.

All burner adjustments must be made in accordance with boiler manufacturers instructions. These must include the checking of flue gas temperatures, average water temperature and CO_2 or O_2 concentration.

To adjust the combustion device, start by increasing the air volume somewhat. When the burner starts it is burning with excess air and smoke number 0. Reduce the air volume until soot occurs and increase again to reach a combustion free of soot.

By this procedure an optimum adjustment is obtained. If larger nozzles are used the preadjustment of the air volume must be increased.

CONDENSATION IN CHIMNEY

A modern burner works with less excess air and often also with smaller nozzles than older models. This increases the efficiency but also the risk of condensation in the chimney. The risk increases if the area of the chimney flue is too large. The temperature of the flue gases should exceed 60°C measured 0,5 metres from the chimney top.

Measures to raise the temperature:

Insulate the chimney in cold attics

Install a chimney liner

Install a draught regulator (dilutes the flue gases during operation and dries them up during standstill)

Increase the oil quantity

Raise the flue gas temperature by removing turbulators, if any, in the boiler.

INSTRUCTIONS FOR USE

The end user should be instructed about the operation and safety features of the burner.

He should also be made aware of the importance of the area around the boiler/burner being kept free of combustible material.

PUMP ADJUSTMENT

See separate description.

ADJUSTMENT OF BURNER

To obtain a correct adjustment a flue gas analysis and a temperature measurement must be carried out. Otherwise there is a risk that a bad adjustment may cause a formation of soot, bad efficiency or condensate in the chimney.

MAINTENANCE

The boiler/burner should be examined regularly for any signs of malfunction or oil leakage.

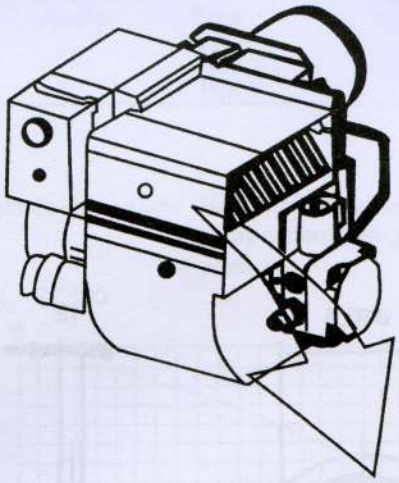

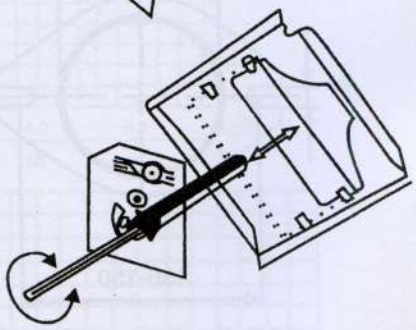

AIR ADJUSTMENT 0–32

MAINTENANCE OF OIL BURNER

Warning: Before doing any service switch off power at the main switch and cut off the oil supply.

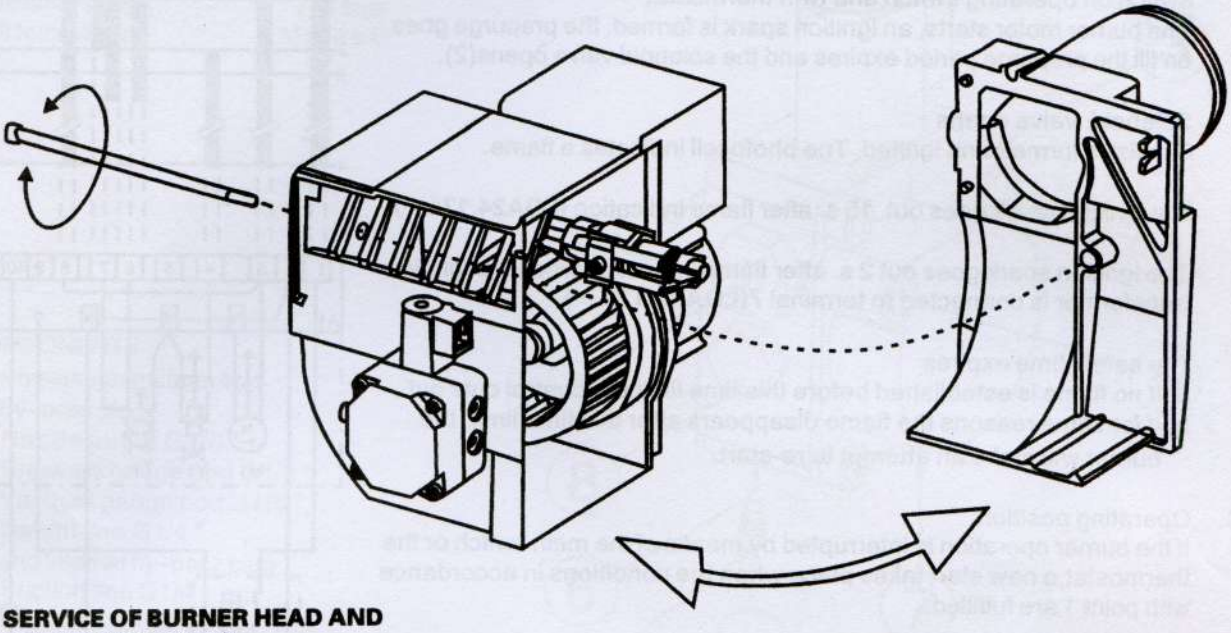

SERVICE OF BURNER HEAD AND NOZZLE ASSEMBLY

ELECTRIC EQUIPMENT

OIL BURNER CONTROL:LOA21···/LOA24···

FUNCTION

1. Switch on operating switch and twin thermostat
   The burner motor starts, an ignition spark is formed, the prepurge goes on till the prepurge period expires and the solenoid valve opens(2).

2. Solenoid valve opens
   Oil mist is formed and ignited. The photocell indicates a flame.

(1) The ignition spark goes out 15 s. after flame indication **(LOA24.171···).**

(2) The ignition spark goes out 2 s. after flame indication when the ignition transformer is connected to terminal 7**(LOA24.173 ···).**

3. The safety time expires
   a. If no flame is established before this time limit the control cuts out .
   b. If for some reasons the flame disappears after this time limit, the burner will make an attempt to re-start.

3-4. Operating position
   If the burner operation is interrupted by means of the main switch or the thermostat,a new start takes place when the conditions in accordance with point 1 are fulfilled.

   The oil burner control cuts out
   A red lamp in the control is lit. Press the reset button and the burner re-starts.

   Post-ignition
(2) If post-ignition of 15 s. is wanted, move the ignition transformer from terminal 7 to terminal 6**(LOA24. 173···).**

WIRING DIAGRAM

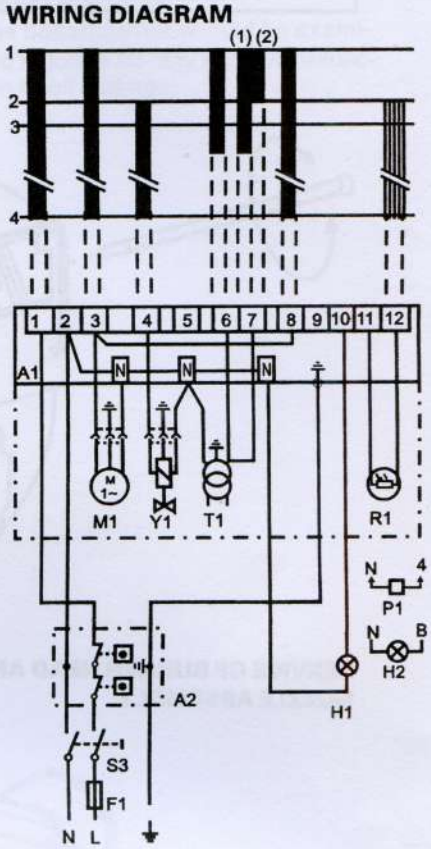

LIST OF COMPONENTS

A1	Oil burner control	P1	Time meter (optional)
A2	Twin thermostat	R1	Photoresistor
F1	Fuse, max. 10A	S3	Main switch
H1	Alarm lamp	T1	Ignition transformer
H2	Signal lamp (optional)	Y1	Solenoid valve
M1	Burner motor		

Mains connection and fuses in accordance with local regulations.

TECHNICAL DATA

Pre-ignition time:	13s
Pre-purge time:	13s
(1) Post-ignition time:	15s
(2) Post-ignition time:	2s
Safety lock-out time:	10s
Reset time after lockout:	≈50s
Reaction time on flame failure:	max. 1s
Ambient temperature:	from-20 to +60℃
Min. current with flame established:	65 μ A
Max. photo current at start:	5 μ A
Enclosure:	IP 40
(Under voltage proof only LOA24···)	

CONTROL OF PHOTO CURRENT

Current through photo unit is measured with a d.c. ammeter (a moving coil instrument connected in series with the photo unit).

INSTRUCTIONS PUMP TYPE SUNTUR AS47C

TECHNICAL DATA

Viscosity range:	1–12mm²/s
Pressure range:	7–12bar
Oil temperature:	Max60℃

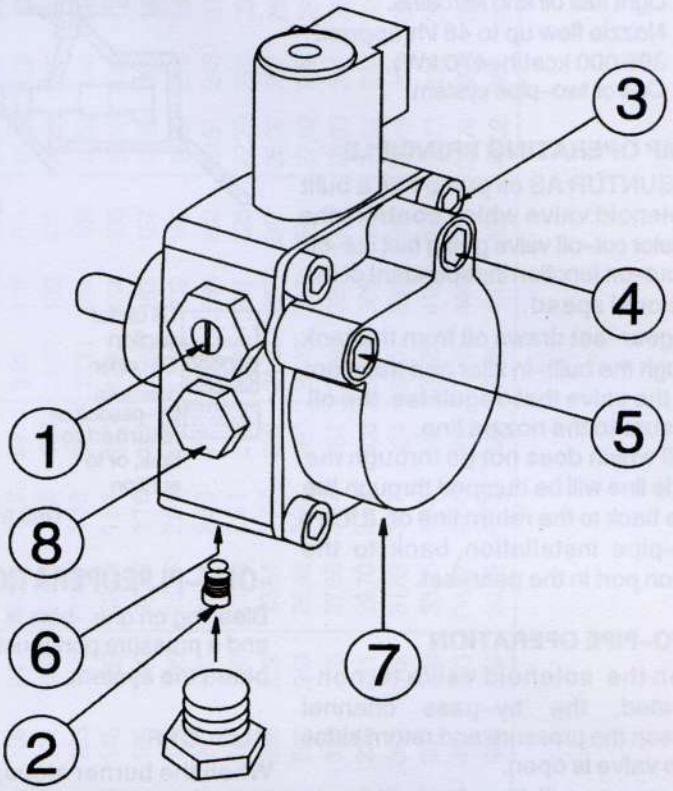

COMPONENTS

1. Pressure adjustment
2. By–pass plug
3. Nozzle outlet G1/8 "
4. Pressure gauge port G1/8 "
5. Vacuum gauge port G1/8 "
6. Return line G1/4 " and internal by–pass plug
7. Suction line G1/4 "
8. Pressure gauge port G 1/8 "

SUCTION LINE TABLES

The suction line tables consist of theoretically calculated values where the pipe dimensions and oil velocity have been matched so that turbulences will not occur.Such turbulences will result in increased pressure losses and in acoustic noise in the pipe system. In addition to drawn copper piping a pipe system usually comprises 4 elbows, a non–return valve, a cut–off valve and an external oil filter.

The sum of these individual resistances is so insignificant that they can be disregarded.The tables do not include any lengths exceeding 100 m as experience shows that longer lengths are not needed.

The tables apply to a standard fuel oil of normal commercial quality according to current standards.On commissioning with an empty tube system the oil pump should not be run without oil for more than 5 min.(a condition is that the pump is being lubricated during operation).

The tables state the total suction line length in metres at a nozzle capacity of 2,1kg/h.Max. permissible pressure at the suction and pressure side is 2,0 bar.For two–pipe systemQ_{max}46 l/h pump capacity at 0 bar.

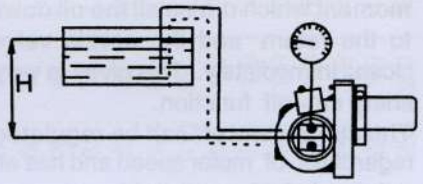

1–pipe system

Height H m	Pipe diameter Ø4mm m
4,0	100
3,0	100
2,0	100
1,0	91
0,5	82
0,0	74

Two–pipe system

Height H m	Pipe diameter ø 6mm m
4,0	29
3,0	25
2,0	22
1,0	18
0,5	16
0,0	14

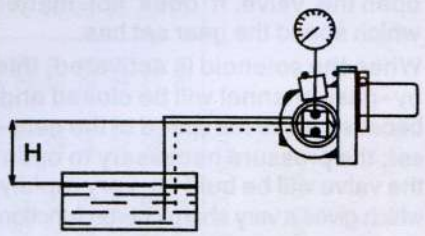

1–pipe system

Height H m	Pipe diameter Ø4mm m

With an underlying tank a 1–pipe–system is not recommended

Two–pipe system

Height H m	Pipe diameter ø 6mm m
0,0	14
–0,5	12
–1,0	10
–2,0	7
–3,0	3
–4,0	0

APPLICATIONS FOR SUNTUR AS47C

- Light fuel oil and kerosine.
- Nozzle flow up to 46 l/h(approx. 395 000 kcal/h–470 kW).
- One or two–pipe system.

PUMP OPERATING PRINCIPLE

The SUNTUR AS oil pump has a built in solenoid valve which controls the regulator cut–off valve giving fast cut–off and cut–on function independent of the rotational speed.

The gear–set draws oil from the tank through the built–in filter and transfers it to the valve that regulates the oil pressure to the nozzle line.

All oil which does not go through the nozzle line will be dumped through the valve back to the return line or, if it is a one–pipe installation, back to the suction port in the gear–set.

–TWO–PIPE OPERATION

When the solenoid valve is non–activated, the by–pass channel between the pressure and return sides of the valve is open.

No pressure will then be built up to open the valve. It does not matter which speed the gear set has.

When the solenoid is activated, this by–pass channel will be closed and because of the full speed of the gear–set, the pressure necessary to open the valve will be built up very rapidly which gives a very sharp cut–on function.

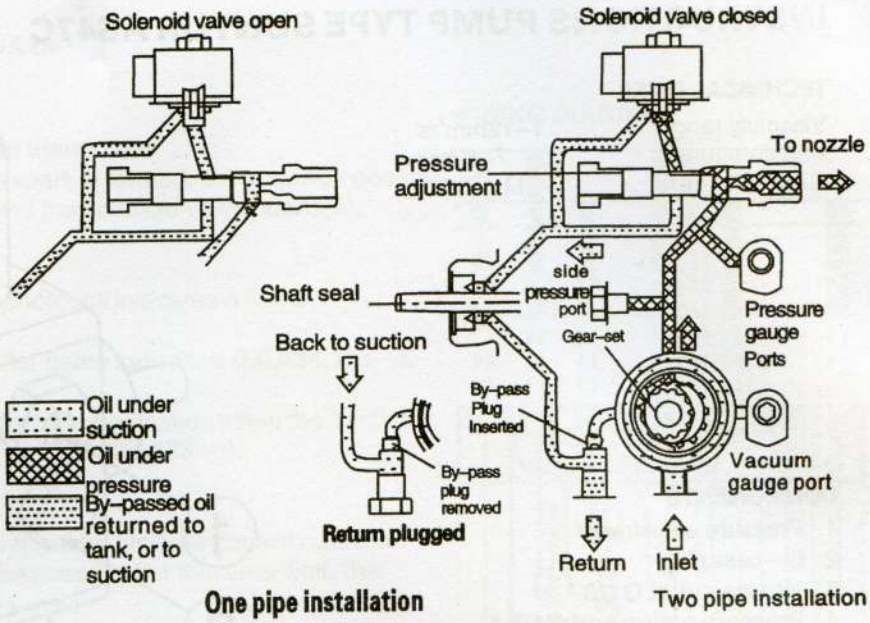

–ONE–PLPEOPERATION

Bleeding on one –pipe is not automatic, and a pressure port must be opened to bleed the system.

CUT–OFF

When the burner stops, the solenoid opens the by–pass at the same moment which drains all the oil down to the return and the nozzle valve closes immediately. This gives a very sharp cut–off function.

The cut–on and off can be regulated regardless of motor speed and has an extremely fast response.

When the solenoid is non activated, the torque requirement is low up to full motor speed.

Shaft rotation and nozzle location
C: Anti–clock. rotation/ Left hand nozzle(seen from Shaft end)

Gear set capacity (see pump capacity curves)

AS:Solenoid valve with cut–off

AS 47 C

EXCHANGE OF FILTER

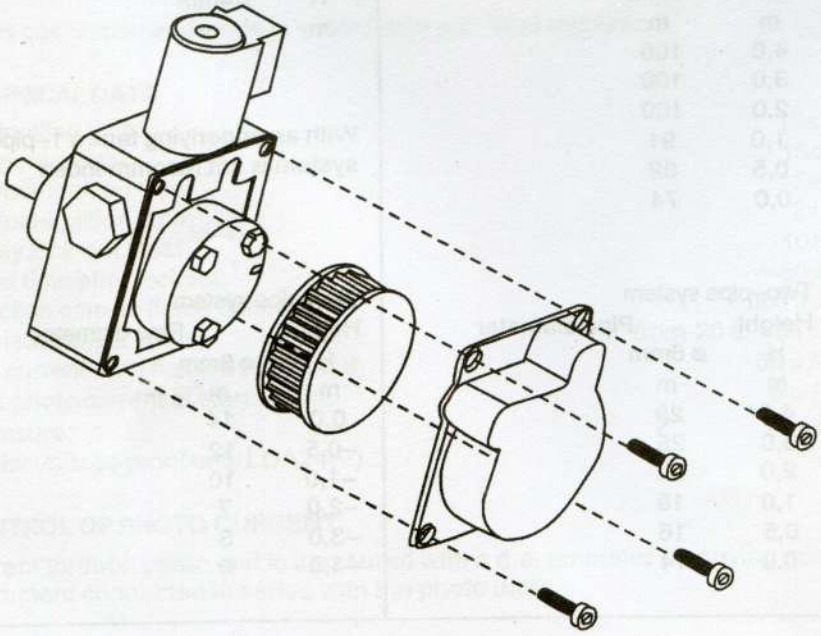

MOUNTING/DISMOUNTING RETURN PLUG

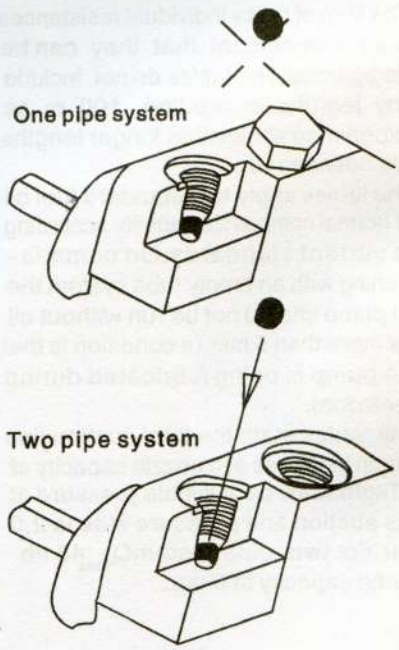

NOZZLETABLE

Pump pressure bar

Gph	8			9			10			11			12			13			14			15		
	kg/h	kW	Mcal/h	kg/h	kW	Mcal/h	kg/h	kW	Mcal/h	kg/h	kW	Mcal/h	kg/h	kW	Mcal/h	kg/h	kW	Mcal/h	kg/h	kW	Mcal/h	kg/h	kW	Mcal/h
0,40	1,33	16	13	1,41	17	14	1,49	18	15	1,56	18	16	1,63	19	17	1,70	20	17	1,76	21	18	1,82	21	18
0,50	1,66	20	17	1,76	21	18	1,86	22	19	1,95	23	20	2,04	24	21	2,12	25	22	2,20	26	22	2,28	27	23
0,60	2,00	24	20	2,12	25	22	2,23	26	23	2,34	28	24	2,45	29	25	2,55	30	26	2,64	31	27	2,73	32	28
0,65	2,16	26	22	2,29	27	23	2,42	29	25	2,54	30	26	2,65	31	27	2,75	33	28	2,86	34	29	2,96	35	30
0,75	2,49	29	25	2,65	31	27	2,79	33	28	2,93	35	30	3,08	36	31	3,18	38	32	3,30	39	34	3,42	40	35
0,85	2,83	33	29	3,00	36	31	3,16	37	32	3,32	39	34	3,47	41	35	3,61	43	37	3,74	44	38	3,87	46	39
1,00	3,33	39	34	3,53	42	36	3,72	44	38	3,90	46	40	4,08	48	42	4,24	50	43	4,40	52	45	4,56	54	46
1,10	3,66	43	37	3,88	46	39	4,09	48	42	4,29	51	44	4,48	53	46	4,67	55	48	4,84	57	49	5,01	59	51
1,20	3,99	47	41	4,24	50	43	4,47	53	46	4,68	55	48	4,89	58	50	5,09	60	52	5,29	63	54	5,47	65	56
1,25	4,16	49	42	4,40	52	45	4,65	55	47	4,88	58	50	5,10	60	52	5,30	63	54	5,51	65	56	5,70	68	58
1,35	4,49	53	46	4,76	56	48	5,02	59	51	5,27	62	54	5,50	65	56	5,73	68	58	5,95	70	61	6,15	73	63
1,50	4,98	59	51	5,29	63	54	5,58	66	57	5,85	69	60	6,11	72	62	6,36	75	65	6,60	78	67	6,83	81	70
1,65	5,49	65	56	5,82	69	59	6,14	73	63	6,44	76	66	6,73	80	69	7,00	83	71	7,27	86	74	7,52	89	77
1,75	5,82	69	59	6,18	73	63	6,51	77	66	6,83	81	70	7,14	85	73	7,42	88	76	7,71	91	79	7,97	94	81
2,00	6,65	79	68	7,06	84	72	7,45	88	76	7,81	93	80	8,18	97	83	8,49	101	86	8,81	104	90	9,12	108	93
2,25	7,49	89	76	7,94	94	81	8,38	99	85	8,78	104	89	9,18	109	94	9,55	113	97	9,91	117	101	10,26	122	105
2,50	8,32	99	85	8,82	105	90	9,31	110	95	9,76	116	99	10,19	121	104	10,61	126	108	11,01	130	112	11,39	135	116
2,75	9,15	108	93	9,71	115	99	10,24	121	104	10,73	127	109	11,21	133	114	11,67	138	119	12,11	144	123	12,53	148	128
3,00	9,98	116	102	10,59	126	108	11,16	132	114	11,71	139	119	12,23	145	125	12,73	151	130	13,21	157	135	13,67	162	139
3,50	11,65	138	119	12,35	146	126	13,03	154	133	13,66	162	139	14,27	169	145	14,85	176	151	15,42	183	157	15,95	189	163
4,00	13,31	158	136	14,12	167	144	14,89	176	152	15,62	185	159	16,31	193	166	16,97	201	173	17,62	209	180	18,23	216	186
4,50	14,97	177	153	15,88	188	162	16,75	198	171	17,57	208	179	18,35	217	187	19,10	226	195	19,82	235	202	20,51	243	209
5,00	16,64	197	170	17,65	209	180	18,62	221	190	19,52	231	199	20,39	242	208	21,22	251	216	22,03	261	225	22,79	270	232
5,50	18,30	217	187	19,42	230	198	20,48	243	209	21,47	255	219	22,43	266	229	23,34	277	238	24,23	287	247	25,07	297	256
6,00	19,97	237	204	21,18	251	216	22,34	265	228	23,42	278	239	24,47	290	249	25,46	302	260	26,43	313	269	27,49	326	280
6,50	21,63	256	220	22,94	272	234	24,20	287	247	25,37	301	259	26,51	314	270	27,58	327	281	28,63	339	292	29,63	351	302
7,00	23,29	276	237	24,71	293	252	26,06	309	266	27,33	324	279	28,55	338	291	29,70	352	303	30,84	366	314	31,91	378	325
7,50	24,96	296	254	26,47	314	270	27,92	331	285	29,28	347	298	30,59	363	312	31,83	377	324	33,04	392	337	34,19	405	349
8,00	26,62	316	271	28,24	335	288	29,79	353	304	31,23	370	318	32,63	387	333	33,95	403	346	35,25	418	359	36,47	432	372
8,50	28,28	335	288	30,00	356	306	31,65	375	323	33,18	393	338	34,66	411	353	36,07	428	368	37,45	444	382	38,74	459	395
9,00	29,95	355	305	31,77	377	324	33,59	398	342	35,14	417	358	34,71	435	374	38,19	453	389	39,65	470	404	41,02	486	418

The table applies to oil with a viscosity of 4,4 mm^2/s(cSt)with density 830 kg/m^3.

BURNER WITH PREHEATER

Consider that on preheating the oil quantity is reduced by 5–20% depending on.

- Rise in temperature at the nozzle
- Design of nozzle
- Capacity (high capacity–small difference)

FAULT LOCATION

BURNER FAILS TO START

Situation	Possible causes	Remedies
Motor runs Burner pre-purges Flame occurs Burner locks out	Flame instability	
	Incorrect head settings	Check nozzle to burner head dimension and electrode position
	Low oil pressure	Check oil pressure
	Excess air	Adjust air damper
	Photocell not seeing light	Check that photocell is clean and unobstructed
	Photocell failed	Confirm with new photocell
	Control faulty	Confirn with new control.(NB.it is advisable to change the photocell if also changing control)
Motor runs Burner pre-purges No flame occurs Burner locks out	False light	Check that photocell is not seeing ambient light
	No spark	Check that H.T. leads are sound and are not arcing other than at electrode gap
	No oil	Check oil supply to burner-check that pump is not airlocked Check operation of magnetic valve

BURNER FAILS TO START AFTER NORMAL OPERATION

Burner fails to start Lamp not lit	Fuse has blown	Check or replace fuse if necessary. Check reason for failure
	Appliance thermostat has not reset	Adjust thermostat
	Appliance overheat device has operated	Reset overheat device. Find reason for is operation and rectify
	Control relay or photocell defective	Check by replacement
Motor runs Burner runs to lockout	No oil being delivered	Check that tank,oil lines,fire valve, pump and nozzle are all in good order
	Excessive flue draught is preventing flame establishment	Rectify condition
	No spark	Check ignition transformer.Check electrode gap and porecelains

DELAYED IGNTION, BURNERS STARTS VIOLENTLY

Burner pulsates on start-up only with hot flue	Excessive draught	Recommission burner
Burner pulsates on start-up	Nozzle partly blocked	Replace nozzle
	Oil pressure too low	Check and recommission
	Flue blocked or damaged	Check and rectify
	Fan slipping on shaft	Check and retighten
	Pump coupling loose or worn	Check and replace
Burner starts violently	Delayed ignition	Check the electrode adjustment, see diagram Check electrodes for damage Check H.T. leads for damage and disconnection

OIL BURNERS
MAINTENANCE INSTRUCTIONS

GENERAL INFORMATION

Keep the boiler room clean. Ensure that the boiler room has permanent fresh air intake. Swith off before dismantling the oil burner.
At hinged mounting, make sure that an automatic safety switch is fitted, so that the burner cannot start when the swing door is open.
Don't use the oil fired boiler to burn paper or rubbish, unless the boiler is especially fitted with a hinged door to make this possible.
Don't fill tank while burner is working.

STARTING PRECAUTIONS

Make sure that the oil tank is not empty
Make sure that the valves on oil and water supply pipes are open.
Make sure that the boiler flue damper is open.
Make sure that the boiler thermostat is set at the correct temperature.
Switch on the current. Most relay systems have a delayed action so that the burner will not start for perhaps 20 seconds.
With heavy oil the delay will be longer as the burner will not start until the oil in the preheater reaches the required temperature.

IF THE BURNER WILL NOT START

Press the reset button on the relay. Check that the thermostats are correctly adjusted.
Don't forget the room thermostat, check that any fuses are intact and main switch is on.

IF THE BURNER STARTS BUT DOES NOT IGNITE

Make an attempt to start the burner.
Never make close repeated start attempts.
Don't restart the burner until the boiler is free from oil gases.
If the burner still does not ignite send for the service engineer.

WHEN SWITCHING OFF DURING SUMMER

Aways use the main switch to cut out the burner even when adjusting the burner or cutting off the heating for a short time. For longer periods of shut down, close all valves and the oil supply stop-cock.
Clean the filter and nozzle by washing in petrol or paraffin.
Make sure the filter medium is not damaged or defective.
Protect electrical gear from damp.

WARNING

Never stand too near or put your face to the inspection or fire door, when the burner is about to start.
Never use a naked flame to ignite oil if the electrical ignition fails.
Always wait for about 10 minutes for the unburnt gases to disperse before restarting the oil burner if it has failed to ignite previously.

Installed by:

.....

Tel: .....

bairan