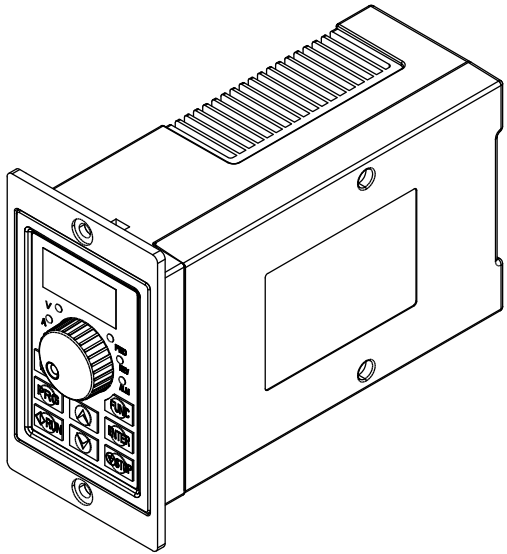

US-2

FREQUENCY CONVERTER
PRODUCT INSTRUCTIONS

THE FIRST CHOICE FOR HIGH-END BRAND COOPERATION
WE HAVE BEEN WORKING HARD!

PREFACE

First of all, thank you for purchasing US series frequency converters of our company!

US-2 series frequency converter is a simple and smart frequency converter, which can control AC asynchronous motor by V/F, and is suitable for simple places such as assembly line and fan. US-2 Series This manual introducesthe configuration function and usage of US-2 series frequency converters.

Please understand the safety precautions before using this product. When using US-2 for the first time (installation, operation, maintenance, inspection, etc.)

Please read this manual before series frequency converters. Equipment supporting manufacturers please send this manual to the end user along with it for subsequent reference.

Notes:

- In order to illustrate the details of the product, the legends in this manual sometimes show the state of removing the housing or safety cover.
- When using this product, please be sure to install the shell or cover as required, and operate according to the instructions.
- The legend in this instruction manual is for illustration only and may differ from the product you ordered.
- Due to product upgrade or specification change, and in order to improve the convenience and accuracy of the manual, the contents of this manual will be changed in time.
- If you need to order the instruction manual due to damage or loss, please contact our regional agents or contact our customer service center directly

CONTENTS

Chapter 1 Introduction of Frequency Conversion 1-2
1.1 Name of each part of frequency converter 1
1.2 Inverter Model and Technical Data 2
1.3 Technical Features of Frequency Converter 2
1.4 Installation Dimensions of Frequency Converter 2
Chapter 2 Description of Control Loop 3-4
2.1 Control Loop Wiring Diagram 3
2.2 Control Terminals and Function Description 4
2.3 Terminal Screen Printing 4
2.3.1 Screen printing of external control terminals 4
2.3.2 Screen printing of power board terminals 4
Chapter 3 Key Description 5-6
3.1 Introduction to Operation and Display Interface 5
3.2 Description of Function Indicator 5
3.3 Key Function Description 6
Chapter 4 Function Parameter Table 7-16
Chapter 5 Error Codes 17
Chapter 6 Communication Protocol (the following data are all hexadecimal) 18-21
6.1 RTU Mode and Format 18
6.1. 1 Format per byte in RTU mode 18
6.1. 2 RTU data frame sequence diagram 18
6.2 Description of Read-Write Function Code 18
6.3 Description of parameter address of communication protocol 18-21
6.4 03Read Function Mode 20-21
6.5 Write Function Mode 21
Chapter 7 Warranty Agreement 22
Chapter 8 Product Warranty Card 23

Chapter 1 Introduction of Frequency Conversion

1.1 Name of each part of frequency converter

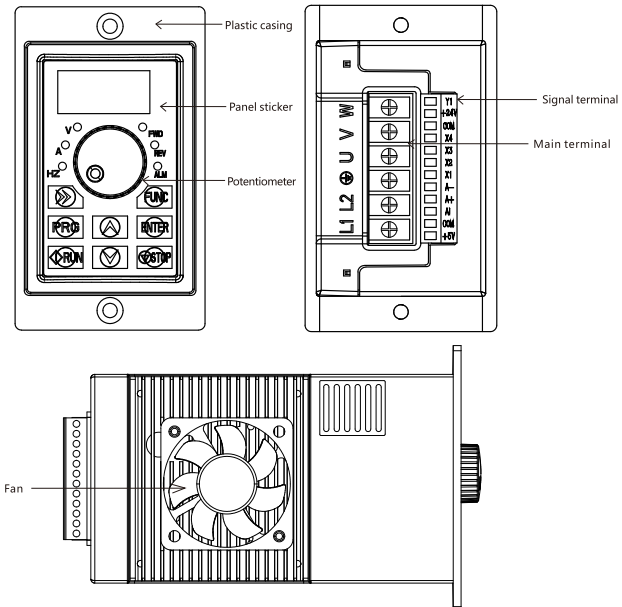

Figure1-1

Table 1-1 Frequency Converter Model and Technical Data

Inverter Model	Power supply capacity KVA	Input Current A	Output Current A	Adaptive motor KW
Single phase power supply : 200~240VAC , 50/60Hz				
US2-0-0.2KW	3.0	2.3	1.6	0.2
US2-0-0.4KW	3.8	3.2	2.1	0.4
US2-0-0.75KW	5.6	4.0	3.7	0.75
US2-0-1.1KW	9.9	8.3	5.5	1.1

1.2 Inverter Model and Technical Data

US-2 series frequency converter has convenient speed regulation, good hand feeling of potentiometer knob, optimized structure, forced air cooling, strong electromagnetic compatibility, complete parameter functions, instrument installation, external operation panel, large low frequency torque, optimized P W M complete protection function and fast response.

1.3 Technical Features of Frequency Converter

- The output frequency range is 0-300 Hz;
- The operation panel has its own speed regulating potentiometer;
- Built-in P I D regulator can realize closed-loop regulation;
- Built-in P I D regulator can realize closed-loop regulation;
- Multifunctional open collector output;
- Support analog input 0-5 V;
- The V/F curve function can be set arbitrarily to meet the requirements of special occasions;
- Use the Shift key to view real-time parameters,
- Adopt a new generation I P M module with complete protection functions;

1.4 Installation Dimensions of Frequency Converter

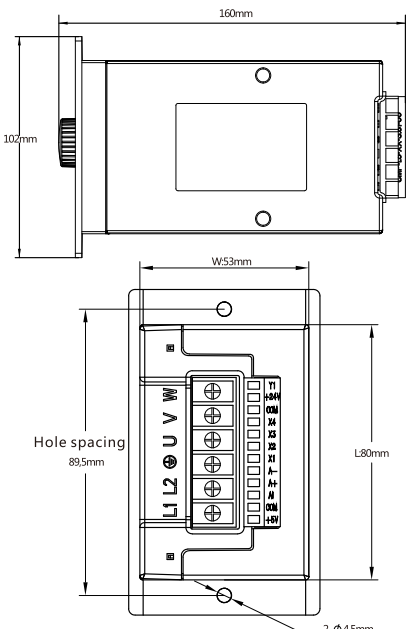

Chapter 2 Description of Control Loop

2.1 Control Loop Wiring Diagram

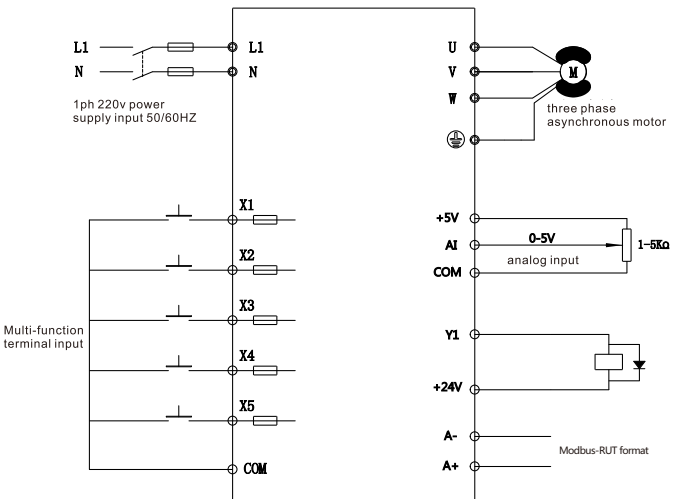

Figure2-1

Table 2-1 Inverter Main Circuit Description

Terminal marking	Name	Description
L1、N	Single-phase power supply input	Single phase2 2 0 VAC power connection point
U、V、W	Frequency converter output	Connect three-phase AC motor
⏚	Grounding terminal	Grounding terminal

2.2 Control Terminals and Function Description

Table2-1 -2 Control Loop Terminal Description

Category	Terminal Symbol	Function Description	Specifications
Power interface	+ 2 4 V	+ 2 4 VDigital signal input terminal power supply	Maximum output 100mA
	+ 5 V	+ 5V Analog Input Terminal Power Supply	Maximum output 20mA
	C O M	Analog, Digital, + 5V and + 24V Ground Reference	Analog quantity and digital quantity share land
Analog Input	A I	AI only receives voltage quantity input (reference ground: COM)	INPUT, input voltage range: 0 ~ 5V
Multifunction Input	X 1	X (X1, X2, X3, X4, X5) to COM Active when intermittent shorting (Common side: COM)	INPUT, 0-10V level signal, Active low, 5mA.
	X 2		
	X 3		
	X 4		
	X 5		
Digital Output	Y 1	Multifunctional programmable open collector output, programmable The process is defined as a switching value output terminal with multiple functions, Common side: COM	OUTPUT, maximum load currentNo more than 50mA.
Communication Interface	A +	Rs485 Signal + Terminal	Standard Rs485 communication interface
	A -	Rs485 Signal-Terminal	

2.3 Terminal Screen Printing

2.3.1 Screen printing of external control terminals

+5V	COM	AI	A+	A-	X1	X2	X3	X4	COM	+24V	Y1

2.3.2 Screen printing of power board terminals

L1	L2	G	U	V	W

Chapter 3 Key Description

3.1 Introduction to Operation and Display Interface

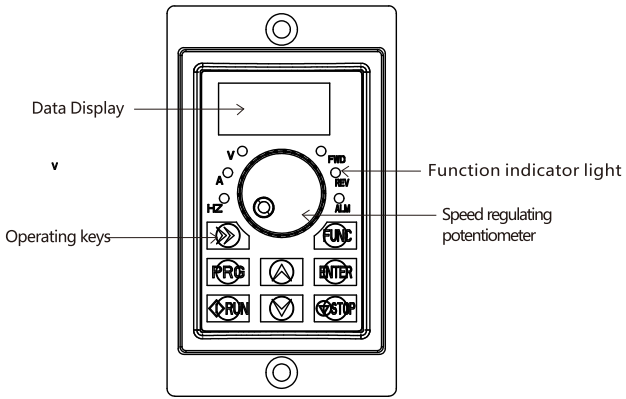

图3-1

3.2 Description of Function Indicator

Table 3-1 indicator function list

Name	escription	
Status indicator	FWD	Forward rotation operation indicator The light is on to indicat that the frequency converter is in a forward running state
	REV	Reverse running indicator The light is on to indicate that the frequency converter is in reverse operation
	ALM	Fault indicator lamp When the frequency converter is in a fault state, the lamp lights up and goes out in a normal state
Unit indicator	Hz	Frequency unit
	A	Unit of current
	V	Voltage unit
Digital tube display	8Paragraph4BitsLEDDisplay, display frequency, current, voltage and other information	
Analog potentiometer	Panel potentiometer regulates frequency	

3.3 Key Function Description

Table 3-1 Key Function Description

Name	Description
PRG	Function Settings Enter Key, Exit Key
FUNC	Ink key
ENTER	Setting Parameter Confirmation
》》	Under the shutdown display interface and the operation display interface, you can move right to cycle and select display parameters; When modifying parameters,You can select the modification bit of the parameter
△	Up key, data setting up key
▽	Down key, data setting down key
RUN	In keyboard operation mode, used for patrol operation
STOP	When running, this key can be used to stop the running operation; In case of fault alarm state, the control mode can be used in many control modes Press the key to reset the operation

Chapter 4 Function Parameter Table

The symbols in the menu are described as follows

×: Indicates the parameter that can be modified in any state;
○: Indicates the parameter that cannot be modified in the running state;
◆: Indicates that the parameter is actually detected and cannot be modified;
◇: Indicates that the parameter is "Manufacturer Parameter" and can only be modified by the manufacturer. Modification is prohibited by the user.

Function Code	Name	Content	Set Range	Factory Settings	Change
F 0 Group-Basic Operating Parameters					
F0.00	Motor control mode	0: vector control 1: Reserved 2: V/F Control Note: This parameter cannot be initialized please modify it manually	0 ~ 2	2	×
F0.01	Command Source Selection	0: Operation Panel Run Command Channel 1: Terminal Operation Command Channel 2: communication run command channel	0 ~ 2	0	○
F0.02	Main Frequency Source X Selection	0: given number 1 (preset frequency F0.03, operation panel key ▲、▼can be modified) 1: The number is given 2 (preset frequency F0.03, terminal UP/DOWN can be modified) 2: AI1 analog (0 ~ 20mA/0 ~ 5V) 3: Reservation : panel potentiometer 5: Reserved 6: Multi-speed 7: Reserved 8: PID 9: given communication	0 ~ 9	4	○
F0.03	Preset frequency	The set value is a given initial value of the frequency number	0.00 ~ upper limit frequency	50.00	○
F0.04	Running direction	0: In the same direction 1: Opposite direction	0 ~ 1	0	×
F0.05	Maximum Frequency	The maximum output frequency is the highest frequency allowed by the frequency converter and is the reference for acceleration and deceleration setting.	MAX { 50.00, F0.06】} ~ 300.00	50	×
F0.06	Upper limit frequency	The operating frequency cannot exceed this frequency	Lower limit frequency "F0.07" ~ Maximum frequency "F0.05"	50.00	×
F0.07	Lower limit frequency	The operating frequency cannot be lower than this frequency	0.00 ~ upper limit frequency "F0.06"	0.00	×

Function Code	Name	Content	Set Range	Factory Settings	Change
F0.08	Carrier frequency	For occasions requiring silent operation, appropriate mention can be made The high carrier frequency meets the requirements, but the carrier frequency is increased The rate will increase the calorific value of the frequency converter.	2.0 ~ 16.0KHz 0.05 ~ 4.0KW 6.0KHz 5.5 ~ 11.0KW 4.5KHz 15.0 ~ 30.0KW 3.0KHz	Model Setting	○
F0.09	Acceleration time	The frequency converter accelerates from zero frequency to the maximum output frequency Take time	0.1 ~ 6000.0S 0.05 ~ 4.0KW 7.5S 5.5 ~ 11.0KW 15.0S 15.0 ~ 30.0KW 30.0S	Model Setting	○
F0.10	Deceleration time	The frequency converter decelerates from the maximum output frequency to the zero frequency station Take time		Model Setting	○
F0.11	Runtime frequency instruction UP/DOWN Benchmar	0:Operating Frequency 1:Set Frequency	0 ~ 1	0	×
F 1Group-Motor Parameters					
F1.00	Motor rated power	Setting motor parameters	0.05 ~ 99.99KW	Model Setting	×
F1.01	Rated voltage of motor		0 ~ 999V	Model Setting	×
F1.02	Motor rated current		0.1 ~ 600.00A	Model Setting	×
F1.03	Motor rated frequency		0.01Hz ~ maximum frequency	50.00	×
F1.04	Rated speed of motor		0 ~ 60000RFM	Model Setting	×
F1.05	Stator resistance of asynchronous motor	Setting stator resistance of asynchronous motor	0.001 ~ 20.000Ω	Model Setting	×
F1.06	No-load current of asynchronous motor	Setting no-load current of asynchronous motor	0.1 ~ rated current of motor	Model Setting	×
F 2 Group Auxiliary Operation Parameters					
F2.00	Inching operation frequency setting	Set inching forward rotation operating frequency	0.00 ~ upper limit frequency	10.00	○
F2.01	Inching acceleration time setting	Set inching acceleration time	0.1 ~ 6000.0S 0.05 ~ 4.0KW 7.5S 5.5 ~ 11.0KW 15.0S 15.0 ~ 30.0KW 30.0S	Model Setting	○
F2.02	Setting of inching deceleration time	Set inching deceleration time		Model Setting	○
F2.03	Shutdown mode	0: Slow down and stop 1: Free shutdown	0 ~ 1	0	×
F2.04	Start frequency of shutdown DC braking	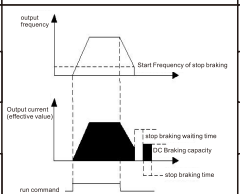	0.00 ~ upper limit frequency	0.00	○
F2.05	Stop DC Braking Waiting Time		0.0 ~ 6000.0s	0.0	○
F2.06	Stop DC brake voltage		0.0 ~ 50.0% * motorRated voltage	0.0	○
F2.07	Stop DC braking time		0.0 ~ 100.0s	0.0%	○

Function Code	Name	Content	Set Range	Factory Settings	Change
F2.08	Hopping frequency	Set hopping frequency, hopping frequency range	0.00~Upper limit frequency	0.00	○
F2.09	Hop frequency range		0.00~Upper limit frequency	0.00	○
F2.10	Torque lift setting	The amount of manual torque increase, which is set relative to the Percentage of motor rated voltage.	0.0～30.0%	Model Settings	×
F2.11	Torque lift cutoff frequency	0.00~Motor rated frequency.	0.00~Motor rated frequency.	15.00	×
F2.12	The set frequency is below the lower limit frequency Rate-time action	0: Operate at the lower frequency limit 1:Zero frequency operation 2: Shutdown	0～2	0	×
F2.13	FDTHorizontal Setting	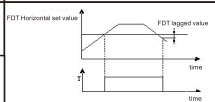	0.00 Hz~Upper limit frequency	10.00	○
F2.14	FDTHysteresis value		0.00 Hz~Upper limit frequency	1.00	○
F2.15	Frequency arrival FARDetectionWidth	Positive and negative detection width of output frequency at set frequency Internal and Terminal Output Valid Signal (Low level).	0.00~Upper limit frequency	5.00	○
F2.16	Multi-speed frequency 0	Set multi-speed frequency 0	-Upper limit frequency ~ up Limited frequency	5.00	○
F2.17	Multi-speed frequency 1	Set multi-speed frequency 1	-Upper limit frequency ~ up Limited frequency	10.00	○
F2.18	Multi-speed frequency 2	Set multi-speed frequency 2	-Upper limit frequency ~ up Limited frequency	15.00	○
F2.19	Multi-speed frequency 3	Set multi-speed frequency 3	-Upper limit frequency ~ up Limited frequency	20.00	○
F2.20	Multi-speed frequency 4	Set multi-speed frequency 4	-Upper limit frequency ~ up Limited frequency	25.00	○
F2.21	Multi-speed frequency 5	Set multi-speed frequency 5	-Upper limit frequency ~ up Limited frequency	37.50	○
F2.22	Multi-speed frequency 6	Set multi-speed frequency 6	-Upper limit frequency ~ up Limited frequency	50.00	○
F2.23	Multi-speed frequency 7	Set multi-speed frequency 7	-Upper limit frequency ~ up Limited frequency	0.00	○
F2.24	Operation Monitoring Parameter Item Selection	By changing the setting value of the function code, it can be changed Monitoring items in the main monitoring interface, such as setting4, I.e., select the output currentD-04The default display item n the main monitoring interface is the current output current value	0～31	0	○
F2.25	Shutdown Monitoring Parameter Item Selection		0～31	1	○
F2.26	Display Mode	LED Bits: Adjust the frequency, PID Display selection for given amount 0: Display frequency, PID Quantity given 1: Show only status monitoring parameters LED Ten: Reserved LED Hundred: Reserved LED Thousands: Reserved	0-0001H	0	○
F2.27	Oscillation suppression selection	0: Invalid 1: Effective	0～1	0	○

Function Code	Name	Content	Set Range	Factory Settings	Change
F2.28	Oscillation suppression coefficient	In case of motor oscillation, set F2.28 to select effective, turn on the oscillation suppression function, and then adjust by setting the oscillation suppression coefficient. Generally, The oscillation amplitude is large, and the oscillation suppression coefficient is increased by F2.29	0～1000	100	○
F2.29	Cooling Fan Control	0: Automatic control mode 1: The power-on process runs all the time 2. Fan action with temperature higher than 50 ℃The fan does not operate below 45 ℃.	0～2	0	○
F2.30	PWM Mode Selection	0: full frequency seven segments 1: Full-frequency five-band 2: 7 to 5	0～2	0	×
F2.31	AVR Functions	0: Invalid 1: The whole process is effective 2: Invalid only when decelerating	0～2	2	×
F2.32	Parameter Initialization	0: No action 1: All user parameters are restored to factory settings 2: clear fault record	0～2	0	×
F Group 3-Input/Output Terminals					
F3.00	Input Terminal X1 Function	0: The control end is idle 1: Forward Rotation Control (FWD) 2: Inversion Control (REV) 3: Three-wire operation control 4: Forward rotation inching control 5: Reverse inching control 6: frequency increment instruction (UP) 7: Frequency Decrease Command (DOWN) 8: Free shutdown control 9: External Reset Signal Input (RST) 10: Reserved 11: External Fault Normally Open Input : Multi-speed selection S1 : multi-speed selection S2 : multi-speed selection S3 15-17: retain : frequency source switch 19: UP/DOWN frequency clear 20: run command channel force to terminal 21: Acceleration and deceleration are prohibited 22: to 47: retain 48: external shutdown signal input (STOP) 49: Stop DC Brake Command 50: Reserved 51: run command channel force to communication 52-61: retain	0 ~ 51	1	×
F3-01	Input Terminal X2 Function		0 ~ 51	2	×
F3.02	Input Terminal X3 Function		0 ~ 51	0	×
F3.03	Input Terminal X3 Function		0 ~ 51	0	×
F3.04 ~ F3.05	Reservation	—	—	—	◆
F3.06	FWD/REV Terminal Control Mode	0: 2-wire control mode 1 1: 2-wire control mode 2 2: 3-wire control mode 1 3: 3-wire control mode 2	0 ~ 3	0	×

Function Code	Name	Content	Set Range	Factory Settings	Change
F3.07	Terminal function detection selection at power-up	0: Terminal Run command invalid on power-up 1: Terminal Run Command Valid on Power-on	0 ~ 1	0	○
F3.08	UF/DOWN Terminal Frequency Modification Rate	This function code is to set the frequency modification rate when the UP/DOWN terminal sets the frequency, that is, the UP/DOWN terminal is shorted to the COM terminal by 1The magnitude of the frequency change in seconds.	0.01 ~ 50.00Hz/S	1.00	○
F3.09	Input Terminal Valid Logic Setting (X1-X4)	LED bits: X1 logic select LED ten bits: X2 logic select LED hundred bits: X3 logic select LED thousand bits: X4 logic select 0 indicates positive logic, i.e. the connection between the Xi terminal and the common terminal is valid, and the disconnection is invalid 1: Indicates inverse logic, that is, the communication between the Xi terminal and the common terminal is invalid, and the disconnection is valid	0000 ~ 1111	0	○
F3.10	Reservation	—	—	—	◆
F3.11	Ai1 Input Lower Limit	Set AI1 Lower Limit	0.00V/0.00mA～5.00V/20.00mA	0.00	○
F3.12	Ai1 Lower Limit Corresponding Setting	The lower limit of AI1 is set to correspond to the setting, which corresponds to Percentage of upper limit frequency	-100.0%～100.0%	0.0%	○
F3.13	Ai1 Input Upper Limit	Set AI1 upper limit	0.00V/0.00mA～5.00V/20.00mA	5.00	○
F3.14	Ai1 Upper Limit Corresponding Setting	Set the AI1 upper limit corresponding setting, which corresponds to Percentage of upper limit frequency	-100.0%～100.0%	100.0%	○
F3.15	Ai1 Analog Input Signal FilteringWave time constant	This parameter is used where the AI1 input signal is filtered Reason, in order to eliminate the influence of interference.	0.1～5.0s	0.1s	○
F3.16 ~ F3.20	Reservation	—	—	—	◆
F3.21	Open Collector Output Terminal Y Setting	0: Idle 1: Frequency converter in operation 2: Frequency Converter Fault 3: Frequency/Speed Level Detection Signal (FDT) 4: Frequency/Speed Arrival Signal (FAR) 5: The frequency converter is running at zero speed 6: Frequency converter overload pre-alarm 7: The frequency converter is ready for operation 8: Output frequency reaches upper limit 9: Output frequency reaches lower limit 10: Communication Settings 11: Alarm Output (Continue) 12: external failure shutdown 12 to 18: retain	0 ~ 18	2	×
F3.22	Reservation		—	—	◆
F3.23	Reservation		—	—	◆
F3.24	Y Output Delay Time	Delay from the change of the state of the switching value output terminal Y to the change of the output	0.0 ~ 255.0s	0.0	×
F3.25	Y OFF Delay Time		0.0 ~ 255.0s	0.0	×
F3.16 ~ F3.20	Reservation	—	—	—	◆

Function Code	Name	Content	Set Range	Factory Settings	Change
F 4 Group-Protection Parameters					
F4.00	Voltage limiting factor	This parameter is used to adjust the ability of the frequency converter to suppress overvoltage during deceleration. Encountered the motor coefficient setting 101 with large inertia	0: off, 1 to 101	20	×
F4.01	Overvoltage limit level	The overvoltage limit level defines the time of overvoltage stall protection Operating voltage of	350 ~ 600/400 ~ 850V	370/700V	×
F4.02	Accelerating current limiting coefficient	This parameter is used to adjust the frequency converter during acceleration Ability to suppress overcurrent	0: off, 1-100	20	×
F4.03	Accelerating current clipping level	The current limiting level defines the current threshold for automatic current limiting, and its set value is the percentage relative to the rated current of the frequency converter.	50% ~ 250%	160%	×
F4.04	Fault automatic reset times	When the number of obstacle resets is set to 0, there is no automatic reset function, only manual reset, and 10 means that the number of times is not limited, i.e. countless times.	0 ~ 10	0	×
F4.05	Automatic fault reset interval Time	Set Automatic Failure Reset Interval	0.5 ~ 25.0s	3.0s	×
F4.06	Output phase-out protection coefficient	Setting Input Phase Default Protection Factor	0.0 ~ 20.00	10.00	○
F4.07	Constant speed current limiting coefficient	This parameter is used to adjust the ability of frequency converter to suppress overcurrent in constant speed process.	0 : off , 1 ~ 5000	0	×
F4.08	Undervoltage protection level	This function code specifies the allowable lower limit voltage of DC bus when the frequency converter works normally.	50 ~ 280/50 ~ 480V	180/360V	×
F4.09	Overload pre-alarm level of frequency converter	The current threshold of overload pre-alarm action of frequency converter is set as a percentage relative to the rated current of frequency converter.	0 ~ 150%	0 ~ 150%	○
F4.10	Overload Prealarm Delay of Frequency Converter	The delay time between the output current of the frequency converter continuously exceeding the amplitude of the overload pre-alarm level (F4.09) and the output of the overload pre-alarm signal.	0.0 ~ 15.0s	5.0s	×
Group F 5-P I D control parameters					
F5.00	PID given quantity input channel	0: given by number The PID assign amount is given by a number and set by that function code F5.01 1: AI1 2-6: retain 7: given pressure (MPa, Kg) 8: panel potentiometer	0 ~ 8	7	○
F5.01	Set a given number	Use the operating keyboard to set the given amount of PID control. This function is valid only when the PID given channel selection number is given (F5.00 is 0 or 8). If F5.00 is 8, use as pressureGiven the force, this parameter is consistent with the unit of F5.04.	0.0 ~ 100.0%	50.0%	○
F5.02	PID Feedback Input Channel	0□AI1 1:Reserved	0 ~ 1	0	○

Function Code	Name	Content	Set Range	Factory Settings	Change
F5.03	PIDRegulation characteristic	0: Positive effect When the feedback signal is greater thanPIDThe given quantity and requirement of Inverter Output Frequency Decreases (i. e., reduce that feedback signal). 1Negative effects When the feedback signal is greater than PIDThe given quantity and requirement of Inverter Output Frequency Rise (i. e., reduce that feedback signal).	0 ~ 1	0	○
F5.04	Sensor range	0.0 ~ 6000.0 (MPa、Kg)	0.0 ~ 6000.0 (MPa、Kg)	10.0	○
F5.05	Proportional gainKp1	PIDThe speed of adjustment is increased by proportion The two parameters of benefit and integration time should be set to For fast adjustment speed, it is necessary to increase proportional gain and decrease Small integration time requires slow adjustment speed and needs to be reduced Small proportional gain increases integration time. General sentiment In this case, the differential time is not set.	0.01 ~ 10.00	2.00	○
F5.06	Integration timeTi1		0.00 ~ 10.00s	0.10s	○
F5.07	PIDSleep selection	0: Invalid 1: Normal sleep This method needs to be setF5.08~F5. 11Such as specific Parameters.	0 ~ 1	1	○
F5.08	Sleep threshold coefficient	If the actual feedback value is greater than the set value, and And the frequency output by the frequency converter reaches the lower limit frequency When the frequency converter passes byF5.10Defined After delaying the waiting time, enter the sleep state (i.e. running at zero speed); The value isPID Percentage of the setpoint.	0.0 ~ 150.0%	100.0%	○
F5.09	Allen Su threshold coefficient	If the actual feedback value is less than the set value Inverter PassF5.11After the defined delay waiting time, get out of sleep and start working; The value isPIDPercentage of the setpoint	0.0 ~ 150.0%	90.0%	○
F5.10	Sleep delay time	Set sleep delay time	0.0 ~ 6000.0s	100.0s	○
F5.11	Allen Su delay time	Set awakening delay time	0.0 ~ 6000.0s	1.0s	○
F5.12	PIDSleep frequency	SettingsPIDSleep frequency	0.00 Hz~ Upper limit frequency	20.00	×
F5.13	PIDPressure given	F5.00=7Time asPIDSetting quantity	0 ~ 10.0	5.0	○
F 6Group-R S 4 8 5 Communication Parameters					
F6.00	Protocol Selection	0:CompatibleMD380Agreement 1: Compatible with DeltaMAgreement	0 ~ 1	1	○
F6.01	Communication baud rate setting	0~4:Reservation 5:9600BPS 6: Reserved7: Reserved	0 ~ 7	5	×
F6.02	Data Format	0: No verification (N,8,2)For RTU 1: even check (E,8,1)For RTU 2: odd check (0,8,1)For RTU	0 ~ 2	0	×
F6.03	Local Address	Set the local address 0Is the broadcast address	0 ~ 247	1	×

Function Code	Name	Content	Set Range	Factory Settings	Change
F6.04	Communication Timeout Detection Time	If this machine exceeds the time defined by this function code During the interval, the correct data signal was not received, Then the machine thinks that the communication is out of order, and the frequency converter It will be determined according to the setting of communication failure action mode Whether to protect or maintain the current operation; This value setting For0.0When, don't do itRS485 Communication timeout detected.。	0.1 ~ 100.0s	10.0s	×
F6.05	Proportional linkage coefficient	This function code is used to set the frequency converter as a slave PassRS485Weight of frequency instruction received by Interface Coefficient, the actual operating frequency of this machine is equal to the local work Energy code value multiplied byPassRS485Received by the interface Frequency setting command value. In linkage control, this The function code can set the operating frequency of multiple frequency convertersThe proportion of.	0.01 ~ 10.00	1.00	○

Monitoring Parameters

Function Code	Name	Set Range	Minimum unit	Factory Settings	Change
Group D-Monitoring Parameter Group and Fault Record					
d-00	Output Frequency	0.00 ~ Max Output Frequency	0.01Hz	0	◆
d-01	Set Frequency	0.00 ~ Max Output Frequency	0.01Hz	0	◆
d-02	Output Voltage	0 ~ 999V	1V	0	◆
d-03	Bus Voltage (V)	0 ~ 999V	1V	0	◆
d-04	Output Current	0.0 ~ 6000.0A	0.1A	0	◆
d-05	Motor speed (RPM/min)	0 ~ 36000 (RPM/min)	1	0	◆
d-06	Analog Input AI1 (V/mA)	0.00V/0.00mA ~ 10.00V/20.00mA	0.01	0	◆
d-07	Analog Input AI2 (V) (Reserved)	0.00 ~ 10.00V	0.01V	0	◆
d-08	Analog Output AO1 (V/ MA) (Reserved)	0.00 ~ 10.00V	0.01V	0	◆
d-09	Pulse Input Frequency (Khz) (Reserved)	0 ~ 60.00KHz	0.01KHz	0KHz	◆
d-10	PID Setpoint (V)	0.00 ~ 10.00V	0.01V	0.00	◆
d-11	PID Feedback (V)	0.00 ~ 10.00V	0.01V	0.00	◆
d-12	Current Count Value (Reserved)	0 ~ 65535	1	0	◆
d-13	Current Timing Value (S) (Reserved)	0 ~ 65535S	1S	0	◆
d-14	Input Terminal Status	0 ~ FH Note: When expanded into binary, it means from high to low Sub-X4/X3/X2/X	1	0	◆
d-15	Output Terminal Status	0 ~ 1H Note: 1 indicates that output terminal Y is active	1	0	◆
d-16	Module temperature ℃	0.0℃ ~ +110.0℃	0.1℃	0	◆
d-17	Operating state of frequency converter	0 ~ FFFFH BIT0: Run/Stop BIT1: Forward/Reverse BIT2: Inching BIT3: DC braking BIT4: Reserved BIT5: Overvoltage Limit BIT6: Constant Speed Down BIT7: Overcurrent Limit BIT8 ~ 9: 00-Zero Speed/01-Acceleration/10 -Deceleration/11-Uniform BIT10: Overload Prealarm BIT11: Reserved BIT12 ~ 13 Operation Command Channel: 00-Panel/01-Terminal /10-Reserved BIT14 ~ 15 Bus Voltage Status: 00-Normal /01-Low Voltage Protection/ 10-Overpressure Protection	1	0	◆
d-18	Accumulation of inverter operation Time (h)	0 ~ 65535h	1	0	◆
d-19	Software Upgrade Date (Year)	2019 ~ 2039	1	0	◆

Function Code	Name	Set Range	Minimum unit	Factory Settings	Change
d-20	Software Upgrade Date(Month,Day)	0 ~ 1231	1	0	◆
d-21	Reservation	—	—	0	◆
d-22	Type of third failure	0～21	1	0	◆
d-23	Second Failure Type	0～21	1	0	◆
d-24	Latest Failure Type	0～21	1	0	◆
d-25	Operating Frequency at Current Failure	0.00～Upper limit frequency	0.01Hz	0	◆
d-26	Output Current at Current Fault	0.0～6553.5A	0.1A	0	◆
d-27	Bus voltage at current fault	0～999V	1V	0	◆
d-28	Module temperature at current faultC℃	0.0℃～+110.0℃	0.1℃	0	◆
d-29	Inverter status at current fault	Inverter status at current fault0~FFFFH BIT0: Run/Shutdown BIT1: Forward rotation/Reverse BIT2: inching BIT3: DC brake BIT4: Reserved BIT5: PassVoltage limit BIT6: Constant speed frequency reduction BIT7Overcurrent Limit BIT8 ~ 9:00-Zero speed/01-Accelerate/ 10-Deceleration/11-Uniform velocity BIT10: Overload pre-alarm BIT11: Reserved BIT 12 ~ 13Run command channel:00-Panel/01-Terminal/10-Reservation BIT 14 ~ 15Bus voltage state:00-Normal/01-Low voltage protection/10-Overpressure protection normal/01-Low voltage protection /10-Overpressure protection	1	0	◆
d-30	PIDPressure setting	0.0 ~ 100.0 (bar/Kg)	0.1	0	◆
d-31	PIDPressure feedback	0.0 ~ 100.0 (bar/Kg)	0.1	0	◆

Chapter 5 Error Codes

Fault code	Name
Fault Code	
Err01	Power Module Failure
Err02	Overcurrent in accelerated operation
Err03	Overcurrent in deceleration operation
Err04	Overcurrent in uniform operation
Err05	Overvoltage in accelerated operation
Err06	Overvoltage in deceleration operation
Err07	Overvoltage in uniform operatio
Err08	Overvoltage during shutdown
Err09	Undervoltage in operation
Err10	Frequency converter overload
Err11	Motor overload
Err12	Reservation
Err13	Out-of-phase on output side
Err14	Radiator overheating
Err15	External Device Failure
Err16	R S 4 8 5 Communication failure
Err17	Reservation
Err18	Current Sense Fault
Err19	C P U Failure
Err21	E E P R O M Reading and writing errors

Chapter 6 Communication Protocol (the following data are all hexadecimal)

6.1 RTU Mode and Format

When the controller communicates on Modbus bus in RTU mode, every 8-bit byte in the information is divided into 2 4-bit hexadecimal characters. The main advantage of this mode is that the density of characters transmitted is higher than that of ASCII mode at the same baud rate, and each information must be continuously transmitted.

6.1. 1 Format per byte in RTU mode

Coding system: 8-bit binary, hexadecimal 0-9, A-F.
Data bit: 1 bit start bit, 8 bits of data (low bit first sent),
stop bit occupies 1 bit, parity bit can be selected.
(Refer to RTU data frame as sequence diagram)
Error Check Area: Cyclic Redundancy Check (CRC)

6.1. 2 RTU data frame sequence diagram

with parity

Start	1	2	3	4	5	6	7	8	Par	Stop

without parity

Start	1	2	3	4	5	6	7	8	Stop

6.2 Description of Read-Write Function Code

Function Code	Function Description
03	Read Register
06	Write register

6.3 Description of parameter address of communication protocol

function instruction	address definition	data meaning instruction	R/W
Communication Control Command	2000H	0001H：Shutdown	W
		0012H：Forward rotation operation	
		0013H：Forward rotation inching operation	
		0022H：Reverse operation	
		0023H：Reverse inching operation	
Communication set frequency address	2001H	The set frequency range of communication is-10000 ~10000. Note: The communication set frequency is relative to the most Percentage of large frequencies, ranging from-100. 00%~ 100.00%).	W
Communication Control Command	2002H	0001H: External fault input	W
		0002H: Fault reset	
Read Run/Shutdown Parameter Description	2102H	Set frequency (two decimal places)	R
	2103H	Output Frequency (2 Decimal)	R
	2104H	Output Current (1 Decimal)	R
	2105H	Bus Voltage (1 Decimal)	R

function instruction	address definition	data meaning instruction	R/W
Read Run/Shutdown Parameter Description	2106H	Output Voltage (1 Decimal)	R
	2107H	Analog InputAI(two decimal places)	R
	2108H	Reservation	R
	2109H	Reservation	R
	210AH	Motor speed	R
	210BH	Reservation	R
	210CH	Reservation	R
	210DH	Inverter Temperature (1 Decimal)	R
	210EH	PIDFeedback value (two decimal places)	R
	210FH	PIDSet value (two decimal places)	R
	2110H	Reservation	R
	2111H	Reservation	R
	2112H	Current Failure	R
	2113H	Reservation	R
	2114H	Input Terminal Status	R
	2115H	Input Terminal Status	R
	2116H	BIT0: Run/Shutdown BIT1: Forward rotation/Reverse BIT2: inchingBIT3: DC brake BIT4: ReservedBIT5: Overvoltage Limit BIT6: Constant speed frequency reduction BIT7Overcurrent Limit BIT8 ~ 9:00-Zero speed/01-Accelerate /10-Deceleration/11-Uniform velocity BIT10: Overload pre-alarmBIT11: Reserved BIT 12 ~ 13Run command channel:00-Panel /01-Terminal/10-Communication BIT 14 ~ 15Bus voltage state:00-Normal /01-Low voltage protection /10-Overpressure protection	R
	2101H	BIT0: RunBIT1: Shutdown BIT2: inching BIT3: Forward rotation BIT4: Reverse BIT5~BIT7: Reserved BIT8: given communication BIT9: Analog Signal Input BIT10: Communication Run Command Channel BIT11: Parameter Lock BIT12: Running BIT13: a little move command BIT14~BIT15: Reserved	R

function instruction	address definition	data meaning instruction	R/W
Read out trouble code description	2100H	00: No exception 01: Module Failure 02: overvoltage 03: Temperature fault 04: Frequency converter overload 05: Motor overload 06: External fault 07 ~ 09: Reserved 10: overcurrent dure acceleration 11: overcurrent dure deceleration 12: over-current in constant speed 13: Reserved 14: undervoltage	R

6.4 03Read Function Mode

Inquiry information frame format:

Address	01H
Function	03H
Starting data address	21H
	02H
Data(2Byte)	00H
	02H
CRC CHK Low	6FH
CRC CHK High	F7H

Data analysis of this section: 01H is the address of the frequency converter
03H is read function code
2102H is the start address
0002H is the number of read addresses, and 2102H and 2103H F76FH are 16-bit CRC validation codes

Response information frame format:

Address	01H
Function	03H
DataNum*2	04H
Data1[2Byte]	17H
	70H
Data2[2Byte]	00H
	00H
CRC CHK Low	FEH
CRC CHK High	5CH

Analysis of this data:
01H is the address of the inverter
03H is read function code
04H is the product of read entries * 2
1770H is read 2102H (set frequency) data
0000H is reading data of 2103H (output frequency
5CFEH is a 16-bit CRC check code

6.5 Write Function Mode

Inquiry information frame format:

Address	01H
Function	06H
Starting data address	20H
	00H
Data(2Byte)	00H
	01H
CRC CHK Low	43H
CRC CHK High	CAH

Analysis of this data:
01H is the address of the inverter
06H is write function code
2000H is the control command address
0001H is the shutdown command
43CAH is a 16-bit CRC validation code

Response information frame format:

Address	01H
Function	06H
Starting data address	20H
	00H
Number of Data(Byte)	00H
	01H
CRC CHK Low	43H
CRC CHK High	CAH

Analysis of this data: If the setting is correct, the same input data will be returned.

Chapter 7 Warranty Agreement

1. This product will be guaranteed for 18 months (except for exported/non-standard machine products) under normal use environment (without moisture and dust) from the date of purchase by the user from the manufacturer.
2. This product will enjoy paid lifelong service from the date when the user purchases it from the manufacturer.
3. During the warranty period, a certain maintenance fee will be charged for damage caused by the following reasons:
a. Machine damage caused by errors in use and unauthorized maintenance and renovation;
b. Do not operate correctly according to the procedures listed in the "Product Manual" provided by our company;
c. Product damage caused by force majeure such as earthquake, fire, feng shui disaster, lightning strike, abnormal voltage or other natural disasters;
d. Product damage caused by improper selection of transportation mode or invasion of other external forces during transportation after the user purchases the product;
e. Failures and damages caused by obstacles other than machines (such as external equipment factors);
4. The manufacturer has the right not to provide warranty service under the following circumstances: a. When the user fails to pay off the purchase price according to the Purchase and Sale Contract signed by both parties;
b. The user intentionally conceals the bad use of the product during installation, wiring, operation, maintenance or other processes from the manufacturer's after-sales service provider.
5. If you have any problems during use, please contact our agent or our company in time.

Chapter 8 Product Warranty Card

<table>
<tr><td rowspan="3">Customer Name</td><td colspan="2">Unit Address:</td></tr>
<tr><td>Company Name:</td><td>Contact:</td></tr>
<tr><td>Postal Code:</td><td>Contact number:</td></tr>
<tr><td rowspan="3">Product Information</td><td colspan="2">Part No.:</td></tr>
<tr><td colspan="2">Body bar code (pasted here):</td></tr>
<tr><td colspan="2">Dealer Name:</td></tr>
<tr><td>Fault Information</td><td colspan="2">Maintenance time and content:

Repairman:</td></tr>
</table>