???	????????? ?????? ?? 3/4 ????? F ? ?????? ????? 50
32420335	***???????? ??324??*** *????????? ??????? ? ????????? ??????????? G ?? 1/2 ????? ? G ?? 3/4 ?????*

ARAG® A Nordson Company SPARE PARTS

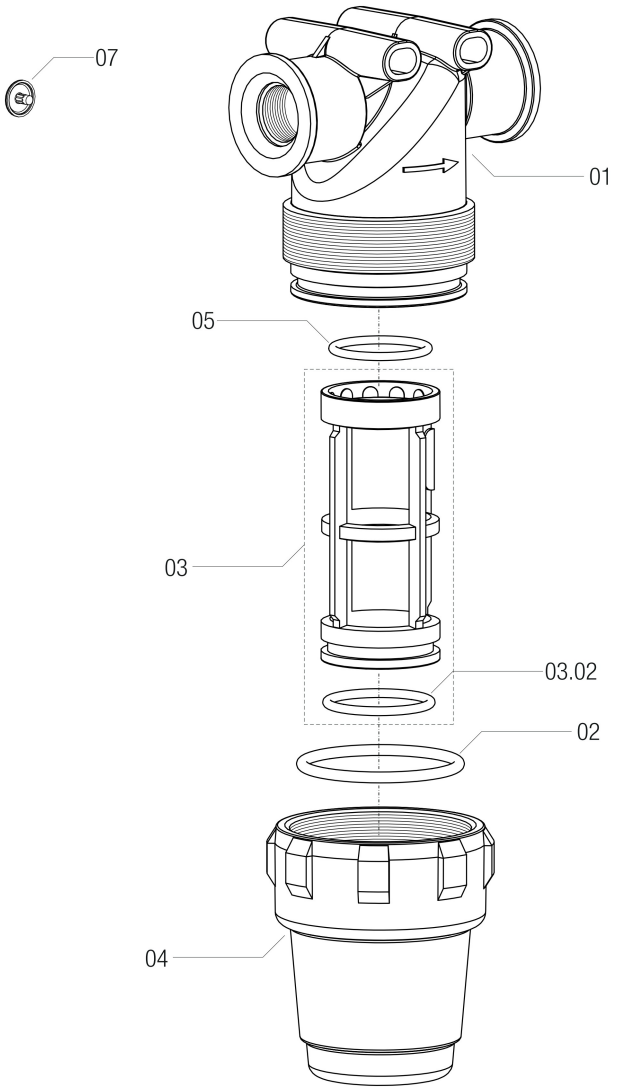

???????	???	????????
01	**3242030.010**	CORPO FIL.LINEA PICCOLO 3/4"F.
02	**G10062**	OR 3,53X 47,22 4187 EPDM
03	**32220035.030**	CARTUCCIA 38X89 GIALLO (80MESH)
03.02	**322000.050**	OR 2,62X 28,25 3112 EPDM

???????	???	????????
04	**322000.020**	COPERCHIO FILTRO LINEA PICCOLO
05	**322000.050**	OR 2,62X 28,25 3112 EPDM
07	**31020035.012**	TAPPO INDICAZIONE D.12 GIALLO