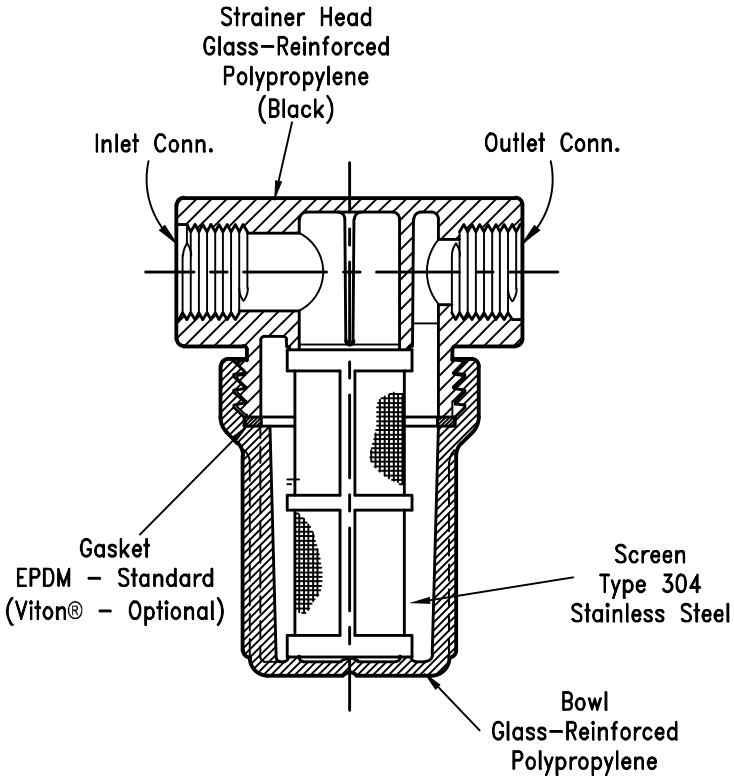

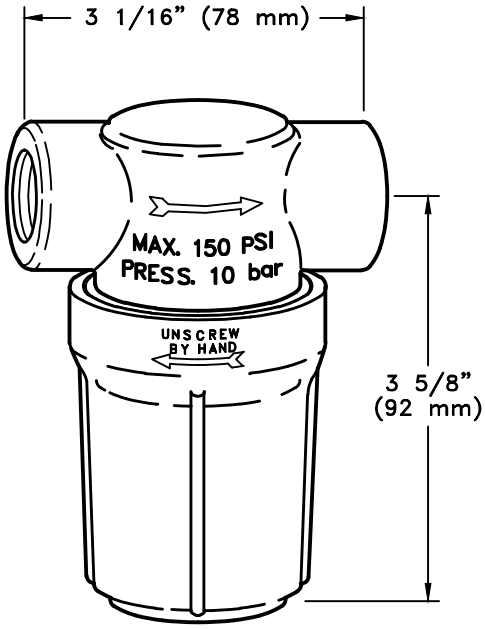

Note: Screen can be easily removed for cleaning by unscrewing bowl from head by hand.

Maximum Recommended Pressure: 150 PSI (10 bar) @ 100°F (38°C) Max.

Strainer No.	Pipe Conn. (F)	Screens*				Net Weight	Approx. Flow Rate With 5 PSI (0.35 Bar) Pressure Drop
		Mesh Size	Opening	Color Code	Full Area		
AA122–1/2–PP	1/2" NPT	16	.045" (1.1 mm)	None	7.7 Sq. In. (49.7 cm²)	3 1/2 oz. (0.1 kg)	12 GPM (45 1/min.)
AAB122–1/2–PP	1/2" BSPT	30	.021" (.053 mm)	None			
AA122–3/4–PP	3/4" NPT	50	.011" (0.28 mm)	Gentian Blue			16 GPM (60 1/min.)
AAB122–3/4–PP	3/4" BSPT	80	.007" (0.18 mm)	Zinc Yellow			
		100	.006" (.015 mm)	Traffic Green			

* 50, 80, and 100 mesh screens reinforced with polypropylene ribs.

Description:

No. AA_122–1/2–PP &
No. AA_122–3/4–PP
Liquid Strainers

Spraying Systems Co.®
Spray Nozzles and Accessories
P.O. Box 7900 - Wheaton, Il. 60187-7901

Rev. No. 4

Ref.

Data Sheet No.
122–PP
Sheet Of

© Spraying Systems Co.