86452T50

??????? ??????? 464???????

????. ?????? ?????????? ? ??????. ?????????????? ???????? ? ???????? ?????????? T5

ARAG® A Nordson Company SPARE PARTS

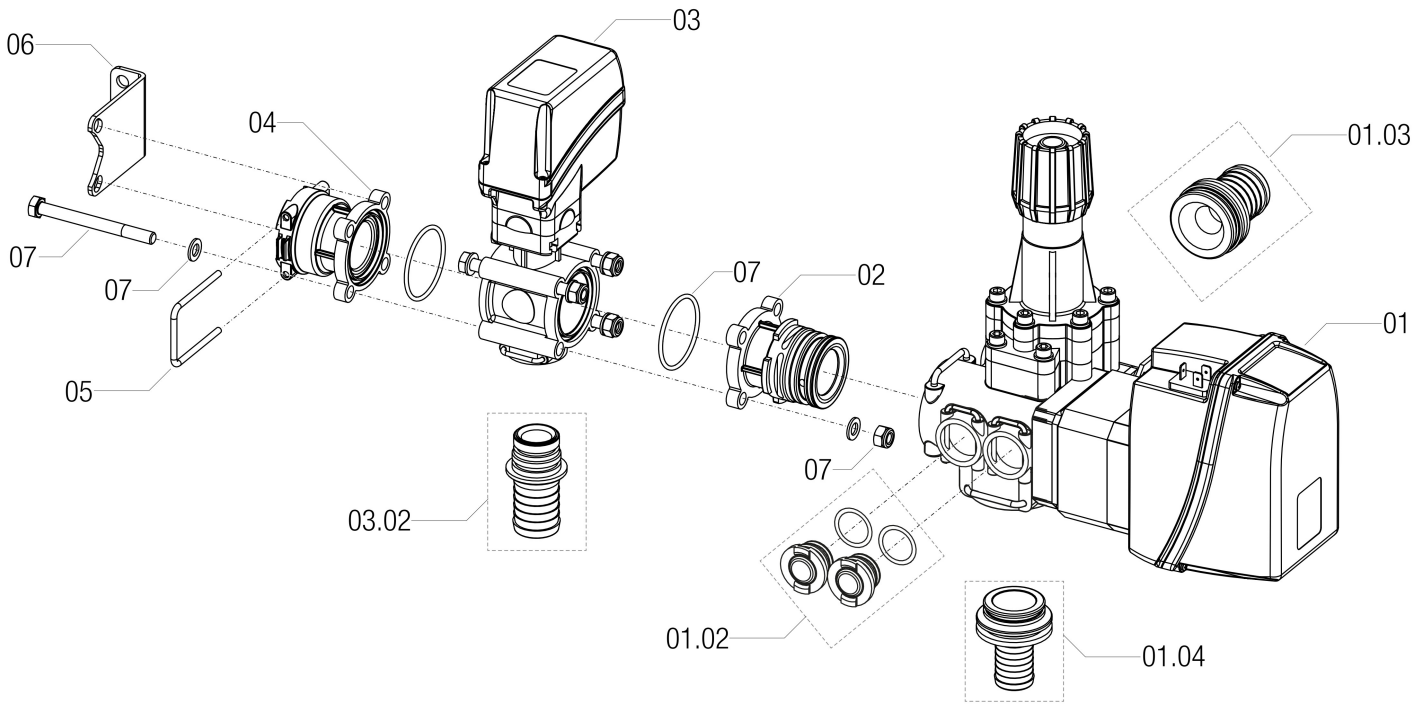

???????	???	????????
01	**8640502**	VALV.COMANDO C/VALV.MAX PR.20B
	464202.150	KIT 2 TAPPI + OR PER VALV. 464
	464402.A42	PTG.SCAR.464 D.35 ROSSO 180L/M C/OR
	464402.A90	PORTAG. DRITTO D.25 PER 464 C/OR
02	**464400.028**	FLANGIA ACCOP.CON OR VALV.464/473
03	**8730020S**	EL.VALVOLA PROP.240L/MIN VELOCE

???????	???	????????
03	**473001.A30C**	RACCORDO PTG D.30 X 8730011 C/OR
04	**473000.157**	FLANGIA TIPO F VALV.473 T5F
05	**010005**	FORCHETTA FILO T5 D=4 INTER.42
06	**463911.100**	PIASTRA SOSTEGNO 463-473 H=65 INOX
07	**473900.916**	KIT ASSEMB.473 1 POSTO INOX S/STAFF