???
8730011

ELECTRO VALVE 873 C/W METER.BY-PASS

?????????? ??? 873 ???

Electric boom section valve

ARAG A Nordson Company SPARE PARTS

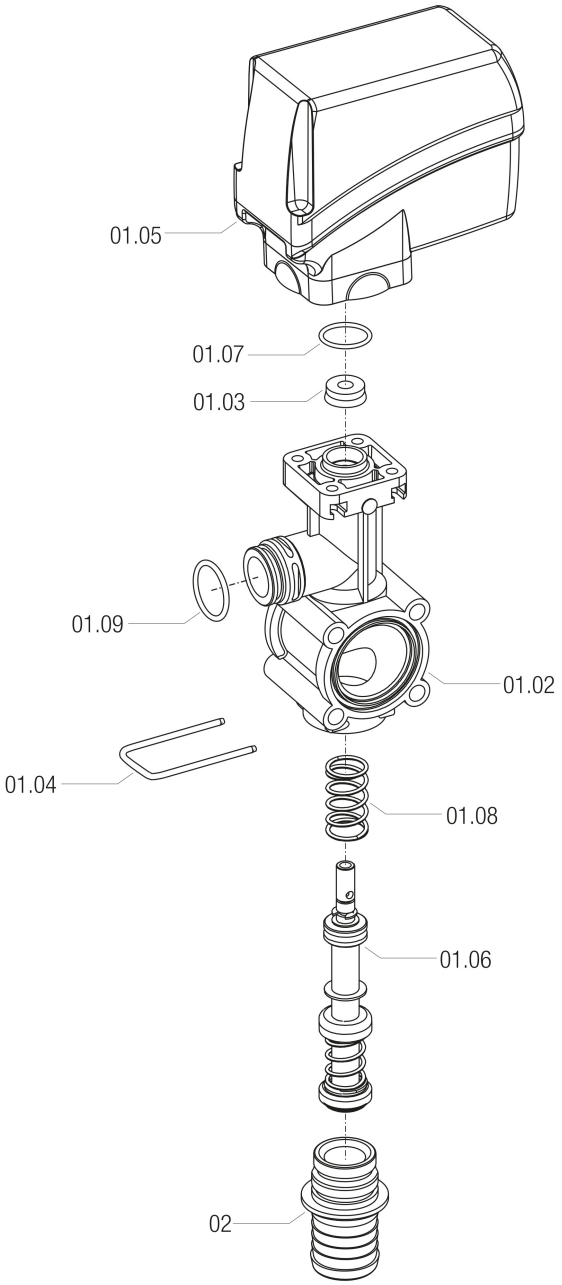

???????	???	????????
01.02	**4730011.510**	CORPO VALV.RIT.CAL.473 C/DADI
01.03	**465900.180**	GUARNIZ.LABBRO D.4X18,7X6,6 VITON
01.04	**010003**	FORCHETTA FILO T3 D=3 INTER.29
01.05	**8650900**	MOTORIDUTTORE R=1:24 12W 5,5MM
01.06	**473011.551**	PERNO OTTUR.COMPL.473011 DOPPIO OR

???????	???	????????
01.07	**465900.060**	OR 1,78X 18,77 70SH 2075 VITON
01.08	**473001.051**	MOLLA DE 18.0X 32.0 F=2.2 INOX
01.09	**G11058V**	OR 2,62X 25,07 3100 VITON
02	**473001.A25C**	RACCORDO PTG D.25 X 8730011 C/OR
02.01	**G11058V**	OR 2,62X 25,07 3100 VITON