HIWIN®

BALLSCREWS

& Accessories

BALLSCREWS

Ballscrews & Accessories

Ballscrews consist of a shaft, a nut into which the balls are integrated and the ball recirculation system. Ballscrews are the type of threaded shaft most commonly used in industrial and precision machines. They are used to convert rotary motion into longitudinal motion and vice versa. They display great accuracy and are highly efficient. HIWIN provides a large selection of ballscrews suitable for all your applications.

HIWIN ballscrews are distinguished by their low-friction and precise running, require little drive torque and offer good rigidity with smooth operation. HIWIN ballscrews are available in rolled, peeled and ground versions making them the optimum product for any application.

DOWNLOADS AND **APPLICATIONS**

Assembly instructions

Sizing tool

CAD configurator

Contents

1 Product overview 7

2 General information 8
2.1 Properties 8

3 Structural properties and selection of HIWIN ballscrews 10
3.1 Design information 10
3.2 Procedure for selecting a ballscrew 12
3.3 Ballscrew shafts 13
3.4 Ball recirculation systems 13
3.5 Wiper variants 14
3.6 Accuracy of the HIWIN ballscrews 15
3.7 Preload and play 22
3.8 Calculations 25
3.9 Material and heat treatment 33
3.10 Lubrication 33

4 Rolled ballscrews 34
4.1 Properties 34
4.2 Tolerance classes 34
4.3 HIWIN order code for rolled ballscrews 35
4.4 Nuts for rolled ballscrews 36

5 Peeled ballscrews 39
5.1 Properties 39
5.2 Tolerance classes 39
5.3 HIWIN order code for peeled ballscrews 40
5.4 Nuts for peeled ballscrews 41

6 Ground ballscrews 48
6.1 Properties 48
6.2 Tolerance classes 48
6.3 HIWIN order code for ground ballscrews 49
6.4 Nuts for ground ballscrews 50

7 Ballscrews for special requirements 60
7.1 Driven nut unit AME 60
7.2 Ballscrews for heavy-duty operation 61

8 Shaft ends and accessories 62
8.1 Shaft ends and bearing configuration 62
8.2 WBK bearing series 66
8.3 SFA/SLA bearing series 68
8.4 Housing for flange nuts (DIN 69051 Part 5) 71
8.5 EK/EF bearing series 72
8.6 BK/BF bearing series 74
8.7 FK/FF bearing series 76
8.8 Axial angular contact ball bearing 79
8.9 HIR lock nuts – radial clamping 86
8.10 HIA lock nuts – axial clamping 87

1. Product overview

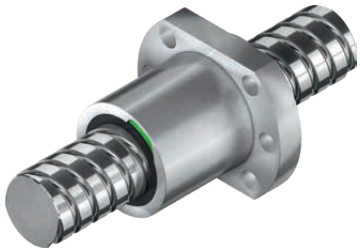

Rolled ballscrews Page 34

- Flange nuts and cylindrical nuts
- Reduced axial play available
- Nominal diameter 8 – 63 mm
- Standardised end machining

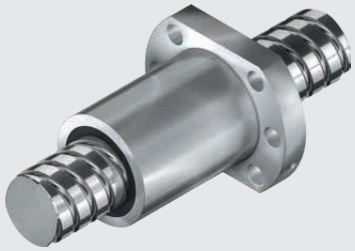

Peeled ballscrews Page 39

- Flange nuts and cylindrical nuts
- Single and double nuts
- Nominal diameter 16 – 80 mm
- Standardised end machining
- Safety nuts

Ground ballscrews Page 48

- Flange nuts and cylindrical nuts
- Single and double nuts
- Nominal diameter 6 – 100 mm
- Preloaded or minimum axial play

Ballscrews for special requirements Page 60

- Driven nut unit
- Ballscrews for heavy-duty operation

Shaft ends and accessories Page 62

- Standard end machining
- Standard spindle bearings
- Nut housing

2. General information

2.1 Properties

There are many benefits associated with HIWIN ballscrews including high efficiency, freedom from axial play, high rigidity and high lead accuracy. The characteristic properties and benefits of HIWIN ballscrews are described in detail below.

2.1.1 High efficiency in both directions

Thanks to the rolling contact between the shaft and nut, ballscrews can achieve an efficiency of up to 90 %.
The special surface treatment used on the ball tracks in HIWIN ballscrews reduces the frictional resistance between the ball and track.
The rolling motion of the balls only requires a low drive torque thanks to the high level of efficiency. Operating costs are therefore cut since less drive output is needed.

1 Linear to rotary motion
2 Ballscrews Rotary to linear motion
3 Ballscrews
μ Efficiency [%]
φ Lead angle [°]
φ_N Lead angle for common transmission [°]
φ_U Lead angle for reverse transmission [°]

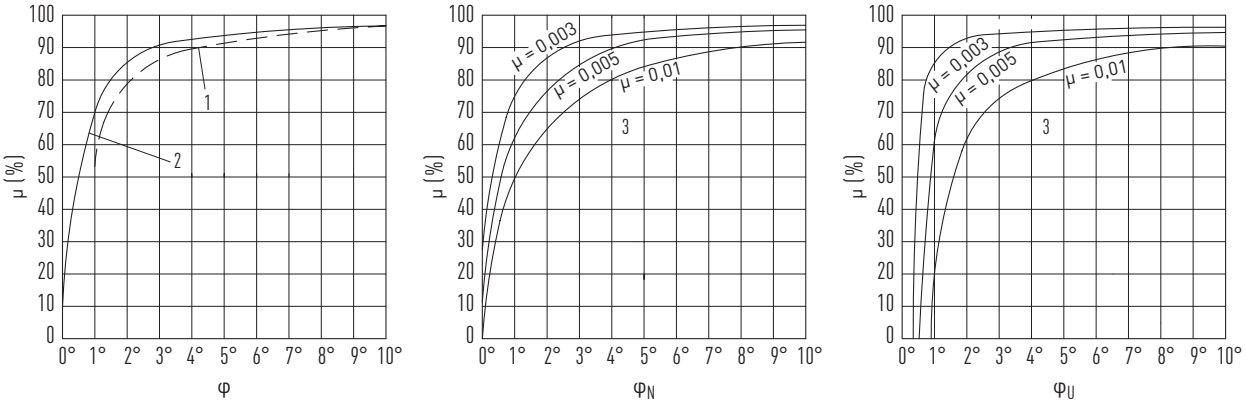

Fig. 2.1 **Mechanical efficiency of threaded shafts**

2.1.2 Zero play and high rigidity

The pointed profile HIWIN uses for ballscrew shafts and nuts allows the ballscrew nuts to be assembled without any axial play. A preload is usually used to achieve the good overall rigidity and repeatability.

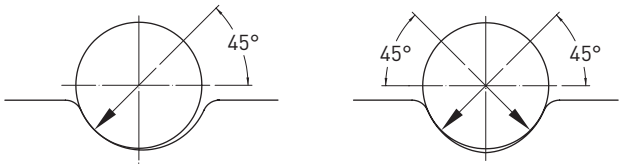

Semi circular profile Pointed profile (Gothic type)

Fig. 2.2 **Typical types of contact in ballscrews (semi circular type, Gothic type)**

2.1.3 High lead accuracy

For applications requiring very high levels of accuracy, our production meets the requirements of ISO and JIS standards; but we manufacture to customer specifications too.
Accuracy is guaranteed by testing with our laser measurement systems and documented for the customer.

2.1.4 Reliable service life

Whereas the life of standard screw drives is determined by wear on the contact surfaces, HIWIN ballscrews can be used virtually up until the end of the metal's fatigue life. Great care is exercised in development, choice of material, heat treatment and manufacturing, as is demonstrated by the reliability and resilience of HIWIN ballscrews over their nominal service life. With every kind of ballscrew, the service life depends on several influencing factors including design aspects, material quality, maintenance and most importantly the dynamic load rating (C_{dyn}).
Profile accuracy, material properties and surface hardness are the fundamental factors affecting the dynamic load rating.

2.1.5 Low starting torque with smooth operation

The rolling friction of the balls in ballscrews only requires a very low starting torque. To achieve precise ball tracks, HIWIN uses a special design (adaptation factor) and special production procedures. This guarantees that the motor's drive torque remains in the range required.
In one particular step of manufacturing, HIWIN can check the profile of every single ball track. A sample report of this test is shown in Fig. 2.3.

Using computer-based measuring systems, the friction torque of every ballscrew is recorded and documented with great accuracy at HIWIN. Fig. 2.4 shows typical torque progress over travel.

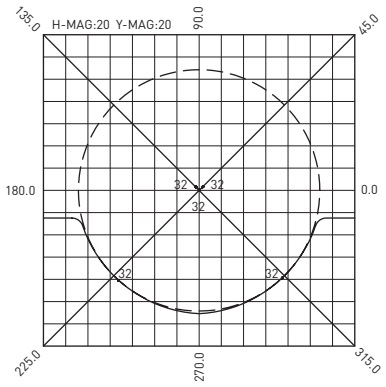

Work name:	SH	Measuring method:	X lead
		Pick up radius:	0.0256 mm
Model No.:	001H-2-3	Horizontal mag:	20.0000
Lot No.:	201536	Vertical mag:	20.0000
Operator:	L. J. F.	Measuring path:	7.0000 mm
Comment:		A:	0.0030 mm

No. of current code symbol

32	292 X:	0.1816 mm	Z:	0.1980 mm	RC:	3.4438 mm
32	292 X:	−0.1911 mm	Z:	0.2022 mm	RC:	3.4532 mm
32	292 X:	−2.1464 mm	Z:	−2.3399 mm	RC:	−42.5259 mm
32	292 X:	2.1799 mm	Z:	−2.3084 mm	RC:	43.3615 mm
32	292 X:	−0.0000 mm	Z:	−0.0000 mm	RC:	3.1750 mm

Fig. 2.3 **Ball arch profile testing at HIWIN**

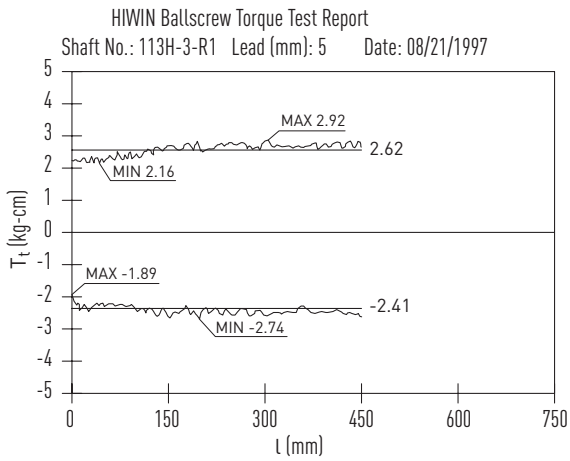

L Distance [mm]
T_C Torque [kg-cm]

Fig. 2.4 **Preload testing at HIWIN**

2.1.6 Special solutions

HIWIN manufactures ballscrews in line with customer drawings or with HIWIN standard end machining. For the ballscrew definition the requirements on the project planning sheet must be documented and checked. This ensures that the ballscrew is ideally adapted to the requirements in place.

3. Structural properties and selection of HIWIN ballscrews

3.1 Design information

a) Select a suitable ballscrew for your application (see Table 3.6). The relevant requirements must be noted for installation. For precision-ground ballscrews with CNC machines, this means careful alignment and the corresponding type of installation; for applications requiring less precision, we recommend rolled ballscrews, which require less work when designing the type of installation and bearings.

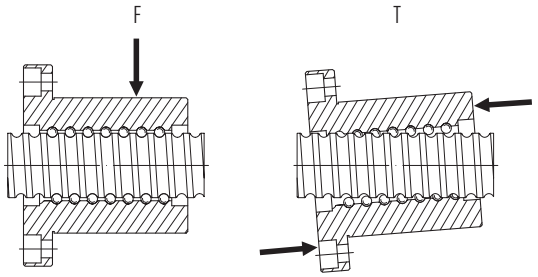

F Radial load
T Moment load

Fig. 3.1 **Uneven load distribution,** caused by insufficient alignment of support bearing and ballscrew nut, incorrect configuration of mounting surface, incorrect angle or error in aligning the nut flange

b) It is particularly important that the bearing housing and ballscrew nut are assembled axially parallel; otherwise uneven load distribution would result. Radial and torque loads are also among the factors which result in uneven load distribution (see Fig. 3.1). This can cause functional limitations and shorten the service life (see Fig. 3.2).

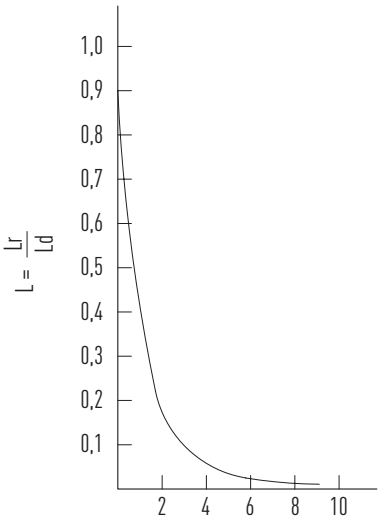

Ball nut – FSWXB2

Specifications:
Shaft diameter: 40 mm
Lead: 10 mm
Ball diameter: 6.35 mm
Radial play: 0.05 mm

Conditions:
Axial force Fa: 3000 N
Radial displacement: 0 mm

L Service life ratio
Lr Real service life
Ld Desired service life
$\delta\alpha$ Assembly inclination

Fig. 3.2 **Impacts on life expectancy** of radial load caused by insufficient alignment

c) Select the right type of bearing for the ballscrew shaft. When used in CNC machines, we recommend angular ball bearings (angle = 60°) because of their higher axial load capacity and the fact that they permit zero-backlash or pre-loaded installation.
A selection of possible end machining processes and suitable floating and fixed bearings are listed in Chapter 8 onwards.

d) Precautionary measures must be taken to stop the ballscrew nut once the useful path has been exceeded (see Fig. 3.3). Travel against an axial fixed stop results in damage.

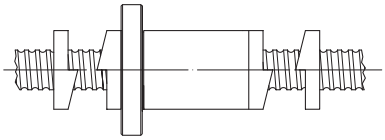

Fig. 3.3 **Mechanical stop which prevents the travel distance from being exceeded**

e) In environments with high levels of dust or metal debris, ballscrews should be provided with a telescopic or bellows shaft protection (see Fig. 3.4).

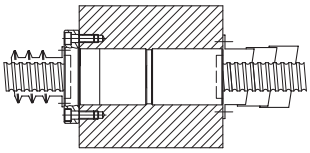

Fig. 3.4 **Telescopic or bellows shaft protection**

f) When using an internal or end cap ball recirculation system, the ball thread must be cut to the end of the shaft. The diameter of the adjacent bearing journal must be around 0.5 –1.0 mm less than the core diameter of the ball tracks dr (see Fig. 3.5).

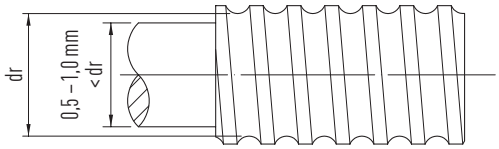

Fig. 3.5 **Special requirement of bearing journal with internal recirculation system**

g) While surface-hardening the shafts, 2 to 3 thread turns are left unhardened on the two ends adjacent to the bearings so that connection modifications are possible. These areas are marked with the symbol in HIWIN drawings (see Fig. 3.6). Please contact HIWIN if you have special requirements for these areas.

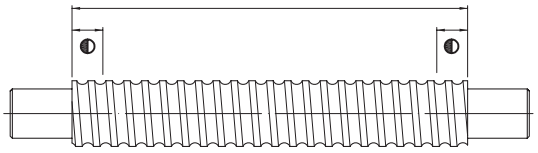

Fig. 3.6 **Area of surface hardening on a ballscrew shaft**

h) Excess preload results in increased friction torque which in turn causes heating and therefore a reduced service life. On the other hand, insufficient preload reduces rigidity and increases the risk of backlash. For details, see Sections 3.7 and 3.8.7.

3.2 Procedure for selecting a ballscrew

Table 3.1 shows the procedure for selecting a ballscrew. The usage requirements (A) can be used to determine the necessary ballscrew parameters (B). The ballscrew suited to the application can therefore be determined one step at a time following the information provided (C).

Table 3.1 **Procedure for selecting a ballscrew**

Step	Usage requirement (A)	Ballscrew parameter (B)	Reference (C)
1	Positioning accuracy	Lead accuracy	Table 4.1, Table 5.1, Table 6.1
2	Speed	Lead of screw drive	$p = \frac{v_{max}}{n_{max}}$
3	Total length of travel distance	Total length of thread	Total length = thread length + length of end machining Thread length = travel distance + length of nut + distance which cannot be used due to connection design (e.g. nut housing, bearing housing etc.)
4	1 Load conditions [%] 2 Speed conditions [%] ($\leq$ 1/5 C recommended)	Average axial load Average speed	Formulas F 3.4 – F 3.9
5	Average axial force	Preload	Formula F 3.5
6	1 Nominal service life 2 Average axial load 3 Average speed	Dynamic load rating	Section 3.8.2, "Service life"
7	1 Dynamic load rating 2 Lead of ballscrew 3 Critical speed 4 Speed limitation by D_N value	Shaft diameter and nut type	Section 3.8.2, "Service life"
8	1 Diameter of ballscrew 2 Nut type 3 Preload 4 Dynamic load rating	Rigidity	Section 3.8.7, "Rigidity"
9	1 Ambient temperature 2 Length of ballscrew	Thermal deformation and final value of cumulative lead (T)	Section 3.8.8, "Thermal expansion"
10	1 Shaft rigidity 2 Thermal deformation	Preload	Section 3.8.8, "Thermal expansion"
11	1 Max. table speed 2 Max. start-up time 3 Configuration of ballscrew	Motor drive torque and configuration of motor	Section 3.8.3, "Drive torque and drive output of motor"

3.3 Ballscrew shafts

HIWIN offers rolled, peeled and ground ballscrews – depending on the application requirements. For the selection of the appropriate shaft the individual characteristics are listed in Table 3.2.

Table 3.2 **Procedure for the selection of a ballscrew**

	Rolled	Peeled	Ground
Profile		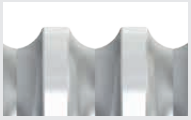	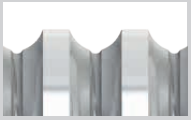
Manufacturing process	Forming process	Cutting process	Grinding process
Typical applications	Transportation	Transportation and positioning	Positioning
Tolerance classes	T5 – T10	T5 + T7	T0 – T5
Nominal diameter [mm]	8 – 63	16 – 80	6 – 100
Max. shaft length [1] [mm]	500 – 5,600	3,300 – 6,500	110 – 10,000
Nut shapes	Flange nut Cylindrical nut	Flange nut Cylindrical nut Double nut	Flange nut Cylindrical nut Double nut
Availability	From stock	From stock	Upon request

[1] Depends on the diameter and the tolerance class

3.4 Ball recirculation systems

HIWIN ballscrews are available with three different recirculation systems.

The external recirculation system consists of the return tubes and the clamping plate. The balls are placed in the ball track between the ballscrew shaft and nut. At the end of the nut, they are guided out of the ball track and back to the start via a return tube; ball circulation is therefore a closed circuit (see Fig. 3.7).

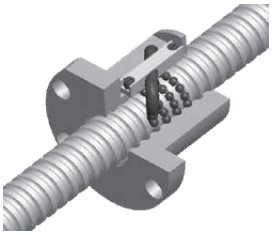

Fig. 3.7 **External recirculation type nut**

In the case of the internal single recirculation, the balls are each fed back to the beginning of a thread turn with the help of the deflecting parts. The balls undertake just one circuit around the shaft. The circuit is closed by a deflecting part in the ballscrew nut and allows the balls to return to the start via the rear of the thread. The position of the ball deflection in the nut gives the internal single recirculation system its name (see Fig. 3.8).

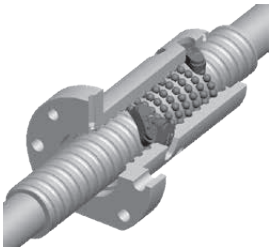

Fig. 3.8 **Internal single recirculation type nut**

The third type of return is the cassette recirculation system shown in Fig. 3.9. It has the same basic principle as the external return, however, the balls are returned via a channel in the ballscrew nut. The balls perform one complete cycle in the ballscrew nut. The cassette return is also called "internal total recirculation".

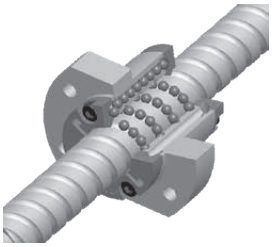

Fig. 3.9 **Cassette recirculation type nut**

3.5 Wiper variants

NBR wiper (N): the allrounder
The nitrile rubber wiper offers excellent sealing and wiping properties for most environmental conditions and is therefore used in almost all applications.

NBR-finger wiper (K): the one for the rough stuff
Wherever stubborn dirt prevails, it really cleans up. The finger wiper with its hard plastic fingers should not be missing in environments with coarse dirt particles.

Felt wiper (F): the most absorbent among the wipers
Felt has the property of absorbing liquids, storing them and releasing them again. This gives the felt wiper an ideal wiping effect and provides additional lubrication.

Felt-finger wiper (V): the duo
With our duo, consisting of a felt wiper and a finger wiper, dirt – whether coarse or fine – has no chance.

Table 3.3 **Wiper properties**

	NBR (N)	Felt (F)	NBR-finger (K)	Felt-finger (V)
Temperature resistance		+ +		+
Soiling	+		+ +	+
Friction reduction	+ +		+	
Tightness	+ +		+ +	
Emergency running		+ +		+ +
Chemical resistance	+ +	+	+	+

3.6 Accuracy of the HIWIN ballscrews

3.6.1 Tolerance class

HIWIN ballscrews are produced in various tolerance classes depending on the application's accuracy requirements.

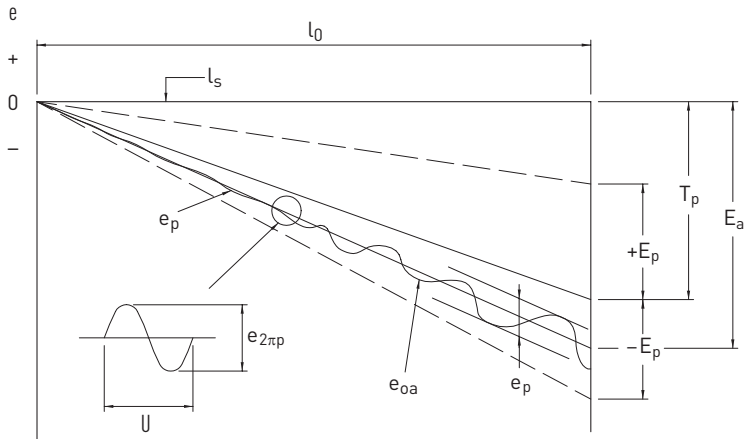

T_p	Difference between nominal and actual path. This value is determined by the various requirements of the customer's application.
e	Path deviation
E_p	Maximum actual path deviation from nominal path over complete distance.
$e_{2\pi p}$	Path deviation within one revolution
E_a	Actual path, determined using laser measurement
e_p	Actual path deviation. Maximum deviation of total actual path from actual total nominal path in the corresponding area
e_{oa}	Average actual path deviation
l_0	Useful path
l_s	Nominal path

Fig. 3.10 **HIWIN measurement curve of lead of precision ballscrews**

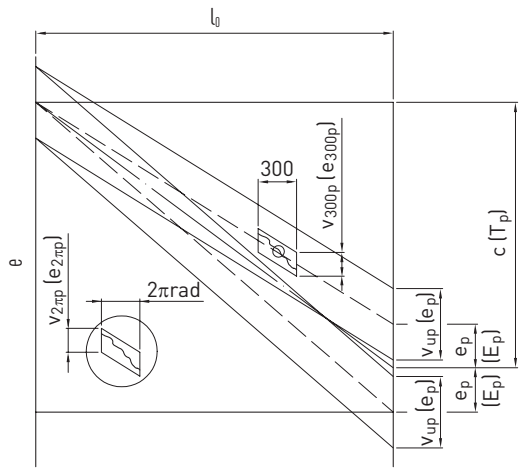

l_0	Useful path
e	Path deviation
e_{300p}	Actual path deviation at 300 mm. Actual path deviation over 300 mm at any thread position
e_{oa} (E_a)	Average actual path deviation over useful path l_0
C (T_p)	Path compensation over useful path l_0
e_p (E_p)	Limit deviation of nominal path
v_{up} (e_p)	Permissible path deviation over useful path l_0
v_{300p} (e_{300p})	Permissible path deviation over 300 mm
$v_{2\pi p}$ ($e_{2\pi p}$)	Permissible path deviation over one revolution

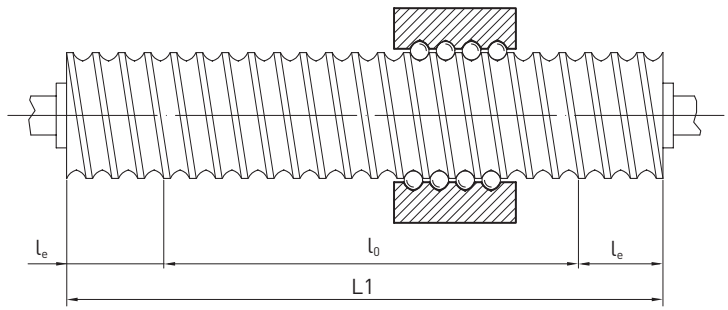

l_0	Useful path
l_e	Path outside of the nominal path
L1	Total thread length

Fig. 3.11 **DIN ISO measurement curve of lead of ballscrews**

3.6.2 Travel fluctuation over 300 mm travel distance

As an international company, HIWIN produces ballscrews on the basis of DIN ISO 3408 in tolerance classes 0, 1, 3, 5, 7 and 10 and in accordance with the Japanese standard JIS in classes 0, 2 and 4. The tolerance classes as well as the permissible travel fluctuation v_{300p} over 300 mm path are listed in Table 3.4.

Table 3.4 **International standards for tolerance classes of ballscrews**

HIWIN tolerance class		T0	T1	T2	T3	T4	T5	T7	T10
v_{300p}	DIN ISO	3.5	6	–	12	–	23	52	210
	JIS	3.5	–	8	–	18	–	–	–

Unit: [µm]

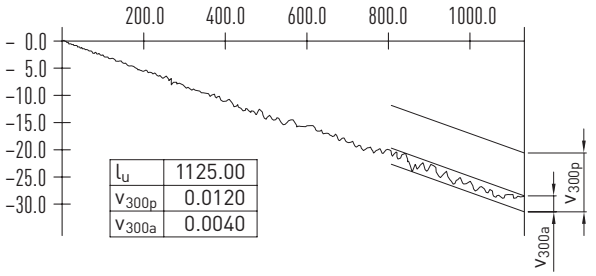

v_{300a} Travel fluctuation over 300 mm at any position (measurement in accordance with DIN standard 69051-3-3)

Fig. 3.12 **Travel fluctuation over 300 mm useful path**

3.6.3 Path deviation and travel fluctuation over useful path

Positioning ballscrews

For positioning ballscrews (peeled and ground) the permissible path deviations over the useful path l_u are listed in Table 3.5.

Table 3.5 **Tolerance classes of peeled and ground ballscrews**

HIWIN tolerance class		T0		T1		T2		T3		T4		T5	
Useful path l_u		e_p	v_{up}	e_p	v_{up}	e_p	v_{up}	e_p	v_{up}	e_p	v_{up}	e_p	v_{up}
above	below												
–	315	4	3.5	6	6	12	8	12	12	23	18	23	23
315	400	5	3.5	7	6	13	10	13	12	25	20	25	25
400	500	6	4.0	8	7	15	10	15	13	27	20	27	26
500	630	6	4.0	9	7	16	12	16	14	30	23	32	29
630	800	7	5.0	10	8	18	13	18	16	35	25	36	31
800	1,000	8	6.0	11	9	21	15	21	17	40	27	40	34
1,000	1,250	9	6.0	13	10	24	16	24	19	46	30	47	39
1,250	1,600	11	7.0	15	11	29	18	29	22	54	35	55	44
1,600	2,000	13		18	13	35	21	35	25	65	40	65	51
2,000	2,500	15		22	15	41	24	41	29	77	46	78	59
2,500	3,150	18		26	17	50	29	50	34	93	54	96	69
3,150	4,000			32	21	60	35	62	41	115	65	115	82
4,000	5,000			39		72	41	76	49	140	77	140	99
5,000	6,300			48		90	50	92		170	93	170	119
6,300	8,000					110	60					210	130
8,000	10,000											260	145
10,000	12,000											320	180

e_p [µm] Path deviation: Limit deviation of nominal path
v_{up} [µm] Travel fluctuation over useful path

Transportation ballscrews

For transportation ballscrews (rolled) the permissible path deviation over the useful path (tolerance for desired path) can be calculated with Formula F 3.1.

F 3.1

$$e_p = \pm \frac{l_u}{300} \times v_{300p}$$

e_p Path deviation: Limit deviation of nominal path
l_u Useful path
v_{300p} Permissible travel fluctuation over 300 mm path

Curves of lead accuracy when measuring on a laser measuring device according to DIN ISO 3408

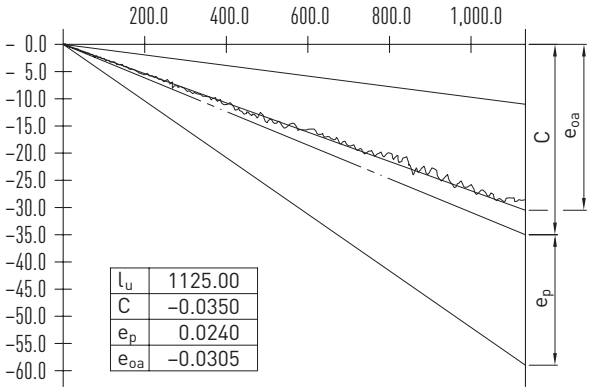

Fig. 3.13 **Average path deviation over useful path l_u**

l_u Useful path
C Travel compensation
e_p Path deviation: Limit deviation of nominal path
e_{oa} Average deviation of actual path

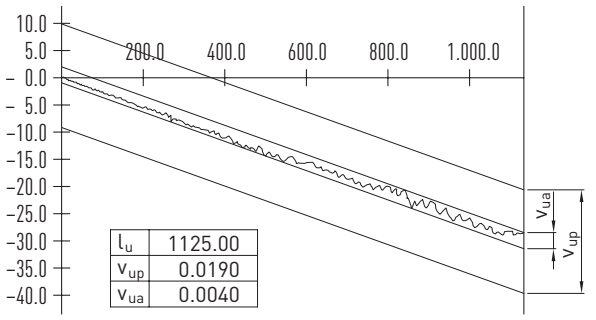

Fig. 3.14 **Travel fluctuation over useful path l_u**

l_u Useful path
v_{up} Permissible travel fluctuation over useful path
v_{ua} Actual travel fluctuation over useful path

Table 3.6 **Recommended tolerance classes for various applications**

	Application	Axis	Tolerance class						
			T0	T1	T2	T3	T4	T5	T7
CNC machine tools	Turning	X	○	○	○	○			
		Z				○	○	○	
	Milling Bore milling	X		○	○	○	○	○	
		Y		○	○	○	○	○	
		Z			○	○	○	○	
	Machining centres	X		○	○	○	○		
		Y		○	○	○	○		
		Z			○	○	○		
	Coordinate drilling	X	○	○					
		Y	○	○					
		Z	○	○					
	Drilling	X				○	○	○	
		Y				○	○	○	
		Z					○	○	○
	Grinding	X	○	○	○				
		Y		○	○	○			
	Die sinking	X		○	○	○			
		Y		○	○	○			
		Z			○	○	○	○	
	Wire eroding	X		○	○	○			
		Y		○	○	○			
		U		○	○	○	○		
		V		○	○	○	○		
	Laser cutting	X			○	○	○		
		Y			○	○	○		
		Z			○	○	○		
Other machines	Punching machine	X				○	○	○	
		Y				○	○	○	
	Wood processing machines								○
	Precision industrial robots			○	○	○	○		
	Industrial robots							○	○
	Coordinate measuring device		○	○	○				
	Non-CNC machines					○	○	○	
	Transport units						○	○	○
	X-Y tables			○	○	○	○	○	
	Linear electric lifting cylinders							○	○
	Aircraft landing gear							○	○
	Wing control							○	○
	Gate valves								○
	Power-assisted steering systems								○
	Glass grinders				○	○	○	○	○
	Surface grinders						○	○	
	Induction hardening machine								○
	Electric machines			○	○	○	○	○	○

3.6.4 Tolerance details and measuring methods for HIWIN ballscrews

Table 3.7 **Radial runout t5 of ballscrew shaft outer diameter related to AA' per length l5 (measurement in accordance with DIN ISO 3408)**

Nominal Ø d_0 [mm]		Reference length [mm]	Tolerance class l_{5p} [µm] for l_5							
above	**up to**	l_5	**T0**	**T1**	**T2**	**T3**	**T4**	**T5**	**T7**	**T10**
6	**12**	80	16	20	23	25	25	32	40	80
12	**25**	160	16	20	23	25	25	32	40	80
25	**50**	315	16	20	23	25	25	32	40	80
50	**100**	630	16	20	23	25	25	32	40	80
100	**200**	1,250	16	20	23	25	25	32	40	80
l_1 / d_0			Tolerance class l_{5maxp} [µm] for $l_1 > 4l_5$							
above		**up to**	**T0**	**T1**	**T2**	**T3**	**T4**	**T5**	**T7**	**T10**
—		**40**	32	40	45	50	50	64	80	160
40		**60**	48	60	70	75	75	96	120	240
60		**80**	80	100	115	125	125	160	200	400
80		**100**	128	160	180	200	200	256	320	640

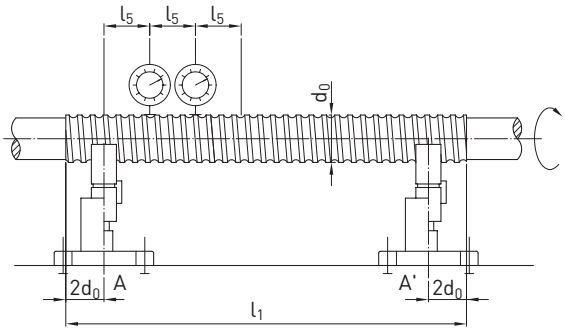

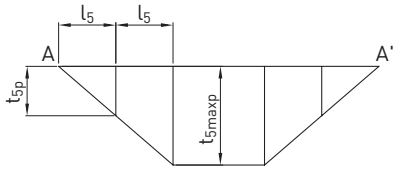

Table 3.8 **Radial runout $t_{6.1}$ of bearing seat related to AA' per unit length l (measurement in accordance with DIN ISO 3408)**

Nominal Ø d_0 [mm]		Reference length [mm]	Tolerance class $t_{6.1p}$ [µm] for l							
above	**up to**	**l**	**T0**	**T1**	**T2**	**T3**	**T4**	**T5**	**T7**	**T10**
6	**20**	80	6	10	11	12	12	20	40	63
20	**50**	125	8	12	14	16	16	25	50	80
50	**125**	200	10	16	18	20	20	32	63	100
125	**200**	315	—	—	20	25	25	40	80	125

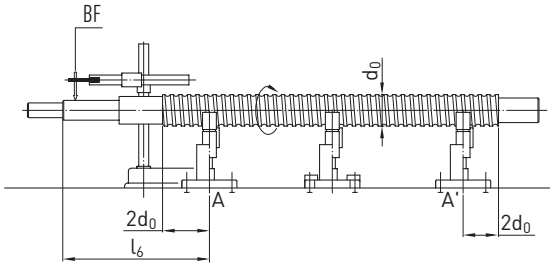

BF Bearing seat

Table 3.9 **Radial runout $t_{6.2}$ of bearing seat related to the centre line of the screw part (measurement in accordance with DIN ISO 3408)**

Nominal Ø d_0 [mm]		Tolerance class $t_{6.2p}$ [µm]			
above	**up to**	**T0**	**T1**	**T3**	**T5**
—	**8**	3	5	8	10
8	**12**	4	5	8	11
12	**20**	4	6	9	12
20	**32**	5	7	10	13
32	**50**	6	8	12	15
50	**80**	7	9	13	17
80	**125**	—	10	15	20

Table 3.10 **Radial runout $t_{7.1}$ of journal diameter related to the bearing seat (measurement in accordance with DIN ISO 3408)**

Nominal Ø d_0 [mm]		Reference length [mm]	Tolerance class $t_{7.1p}$ [µm] for l							
above	**up to**	**l**	**T0**	**T1**	**T2**	**T3**	**T4**	**T5**	**T7**	**T10**
6	**20**	80	4	5	6	6	6	8	12	16
20	**50**	125	5	6	7	8	8	10	16	20
50	**125**	200	6	8	8	10	10	12	20	25
125	**200**	315	—	—	10	12	12	16	25	32

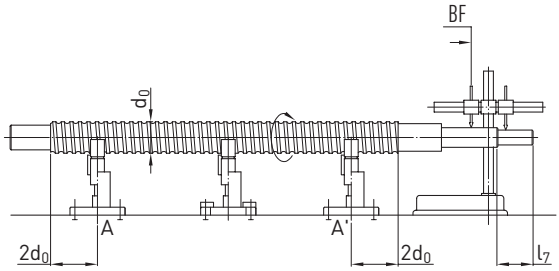

Table 3.11 **Radial runout $t_{7.2}$ of the journal diameter related to the centre line of the bearing seat (measurement in accordance with DIN ISO 3408)**

Nominal Ø d_0 [mm]		Tolerance class $t_{7.2p}$ [µm]			
above	**up to**	**T0**	**T1**	**T3**	**T5**
—	**8**	3	5	8	10
8	**12**	4	5	8	11
12	**20**	4	6	9	12
20	**32**	5	7	10	13
32	**50**	6	8	12	15
50	**80**	7	9	13	17
80	**125**	—	10	15	20

Table 3.12 **Axial runout $t_{8.1}$ of shaft (bearing) faces related to AA' (measurement in accordance with DIN ISO 3408)**

Nominal Ø d_0 [mm]		Tolerance class $t_{8.1p}$ [µm]							
above	**up to**	**T0**	**T1**	**T2**	**T3**	**T4**	**T5**	**T7**	**T10**
6	**63**	3	3	3	4	4	5	6	10
63	**125**	3	4	4	5	5	6	8	12
125	**200**	—	—	6	6	6	8	10	16

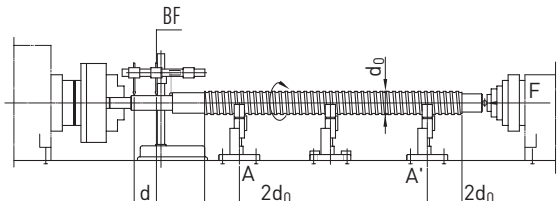

Table 3.13 **Axial runout $t_{8.2}$ of the shaft faces related to the centre line of the screw shaft (measurement in accordance with DIN ISO 3408)**

Nominal Ø d_0 [mm]		Tolerance class $t_{8.2p}$ [µm]			
above	**up to**	**T0**	**T1**	**T3**	**T5**
—	**8**	2	3	4	5
8	**12**	2	3	4	5
12	**20**	2	3	4	5
20	**32**	2	3	4	5
32	**50**	2	3	4	5
50	**80**	3	4	5	7
80	**125**	—	4	6	8

Table 3.14 **Axial runout t_9 of ballscrew nut location face related to AA' (for preloaded ballscrew nuts only) (measurement in accordance with DIN ISO 3408)**

Flange diameter D_2 [mm]		Tolerance class t_{9p} [µm]							
above	**up to**	**T0**	**T1**	**T2**	**T3**	**T4**	**T5**	**T7**	**T10**
16	**32**	8	10	10	12	12	16	20	–
32	**63**	10	12	12	16	16	20	25	–
63	**125**	12	16	16	20	20	25	32	–
125	**250**	16	20	20	25	25	32	40	–
250	**500**	–	–	15	32	32	40	50	–

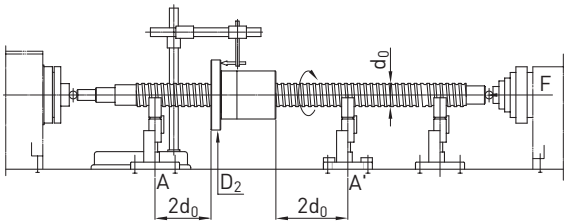

Table 3.15 **Radial runout t_{10} of ballscrew nut location diameter related to AA' (for preloaded and rotating ballscrew nuts only) (measurement in accordance with DIN ISO 3408)**

Outer diameter D_1 of ballscrew nut [mm]		Tolerance class t_{10p} [µm]							
above	**up to**	**T0**	**T1**	**T2**	**T3**	**T4**	**T5**	**T7**	**T10**
16	**32**	8	10	10	12	12	16	20	–
32	**63**	10	12	12	16	16	20	25	–
63	**125**	12	16	16	20	20	25	32	–
125	**250**	16	20	20	25	25	32	40	–
250	**500**	–	–	–	32	32	40	50	–

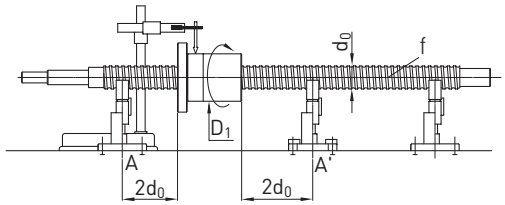

Table 3.16 **Parallelism deviation t_{11} of rectangular ballscrew nut related to AA' (for preloaded ballscrew nuts only) (measurement in accordance with ISO 3408)**

Tolerance class t_{11p} [µm] / 100 mm, cumulative							
T0	**T1**	**T2**	**T3**	**T4**	**T5**	**T7**	**T10**
14	16	16	20	20	25	32	–

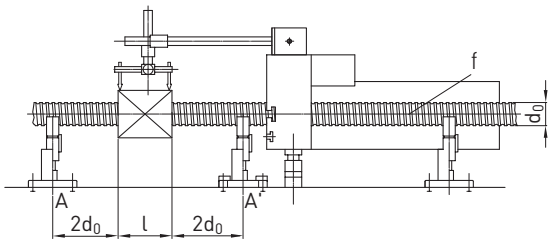

f fixed

3.7 Preload and play

The axial force F_a, caused by outer drive forces or inner preload forces, produces two kinds of axial play. Firstly, axial play S_a, that originates from the air between the ball and ball track. Secondly, the spring compression play $\Delta\ell$, caused by the force F_n, which acts vertically on the point of contact.
By default, rolled and peeled ballscrews are delivered with slight play. This is sufficient for most applications, and has the advantage that the ballscrews run smoothly and a low starting torque is required.
If increased demands are placed on the positioning accuracy and rigidity, the ballscrew should be used with no axial play or preloaded. For preloading, different methods are available, which are explained below.

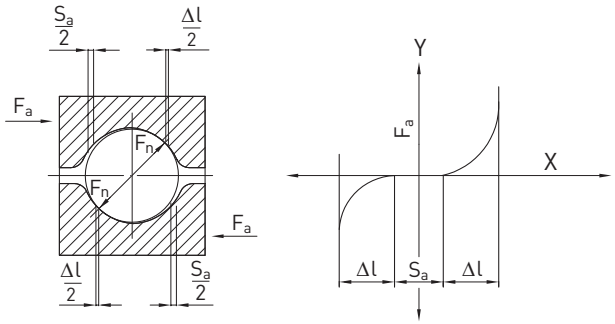

F_a Axial load
X Deviation

Fig. 3.15 **Gothic arch profile and preload**

3.7.1 HIWIN types of preload

Preload can be generated either with double nuts, or single nuts with lead offset or in the case of preloaded single nuts by adjusting the ball size.

Preloaded single nuts

There are two kinds of preload for the single nuts. One of these is the "preload method with oversized balls". This involves balls which are slightly larger than the space in the ball tracks between spindle and nut; the ball therefore makes contact at four points (see Fig. 3.16).

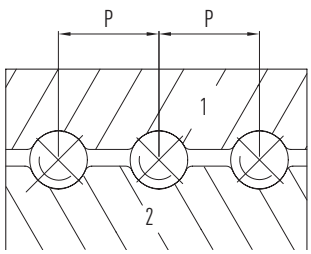

P Lead
1 Nut
2 Screw shaft

Fig. 3.16 **Preload from ball size**

The other method is known as "preload from lead offset" (see Fig. 3.17). The nut is ground such that it is offset from the central lead. This type of preload takes the place of the classic double nut preload and offers the benefit that a compact single nut with good rigidity can be used with low preload forces. This method is not, however, suited to use with high preloads and high leads. The recommend preload force is less than 5 % of the dynamic load rating (C).

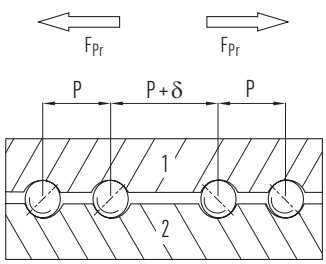

F_{Pr} Preload force
P Lead
1 Nut
2 Shaft

Fig. 3.17 **Preload from lead offset**

Preloaded double nuts
The preload is generated by inserting a spacer between the nuts (see Fig. 3.18). The O preload results from fitting an oversized spacer which pushes the halves of the nut apart. The X preload is generated with an undersized spacer which pulls the nuts together.

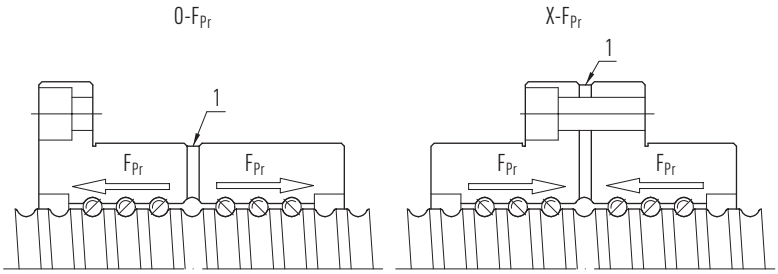

F_{Pr} Preload force
1 Spacer

Fig. 3.18 **Preload from spacer**

3.7.2 Effects of preload
Preload increases the thread's friction torque and therefore causes increases in temperature during operation. To ensure a long service life and low increase in temperature, the maximum preload should not exceed 5 % of the dynamic load rating for single nuts and 10 % for double nuts.
Furthermore preload has an effect on the running characteristics. Besides an increase in idle torque it leads to fluctuations in idle torque, especially with ballscrews with high tolerance classes. (see Section 3.7.3).

Basically, ballscrews should only be preloaded when it is absolutely necessary to avoid axial play.

3.7.3 Idle torque fluctuation

(1) Measuring method
Preload produces a friction torque between nut and threaded shaft. This is measured by moving the threaded shaft at constant speed while holding the nut with a special locking device (see Fig. 3.19).
The force F_{Pr} measured by the force sensor is used to calculate the idle torque of the threaded shaft.

F 3.2

$$T_d = \frac{K_p \times F_{pr} \times P}{2000 \times \pi}$$

T_d Idle torque of preloaded nut
F_{Pr} Preload force
P Lead
K_P Preload friction coefficient
$K_P = \frac{1}{\eta_1} - \eta_2$ (between 0.1 and 0.3)
η_1, η_2 are the mechanical efficiencies of the ballscrew

(2) Measurement conditions
1. Without wiper
2. Speed: 100 rpm
3. Dynamic viscosity of lubricant 61.2 – 74.8 cSt [mm/s] at 40 °C, complying with ISO VG 68 or JIS K2001

(3) The result of the measurement is displayed using standard depiction of idle torque; the nomenclature is shown in Fig. 3.19.

(4) Fluctuations in idle torque (incorporated in the tolerance class definition) are listed in Table 3.17.

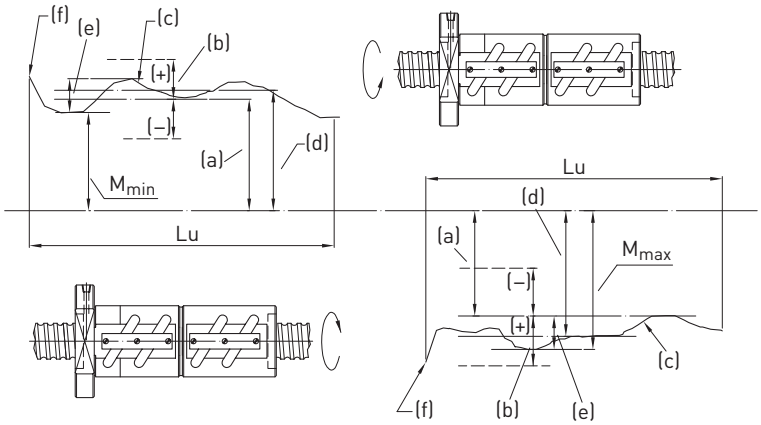

(a) Idle torque
(b) Fluctuations in idle torque
(c) Friction torque currently measured
(d) Average measured friction torque
(e) Measured starting torque
Lu Useful path of nut
M_{min} Minimum torque
M_{max} Maximum torque

Fig. 3.19 **Nomenclature for measuring idle torques**

Table 3.17 **Fluctuation range of idle torque with preload in % (in accordance with DIN ISO 3408)**

Basic friction torque T_{p0} [Nm]		Length of useful path of thread [mm]																			
		4,000 mm maximum														over 4,000 mm					
		Slenderness ratio ≤ 40 Tolerance class							40 < Slenderness ratio < 60 Tolerance class							Tolerance class					
Above	**Up to**	**T0**	**T1**	**T2**	**T3**	**T4**	**T5**	**T7**	**T0**	**T1**	**T2**	**T3**	**T4**	**T5**	**T7**	**T0**	**T1**	**T2**	**T3**	**T4**	**T5**	**T7**
0.2	**0.4**	30	35	40	40	45	50	—	40	40	50	50	60	60	—	—	—	—	—	—	—	—
0.4	**0.6**	25	30	35	35	40	40	—	35	35	40	40	45	45	—	—	—	—	—	—	—	—
0.6	**1.0**	20	25	30	30	35	35	40	30	30	35	35	40	40	45	—	—	—	40	43	45	50
1.0	**2.5**	15	20	25	25	30	30	35	25	25	30	30	35	35	40	—	—	—	35	38	40	45
2.5	**6.3**	10	15	20	20	25	25	30	20	20	25	25	30	30	35	—	—	—	30	33	35	40
6.3	**10.0**	—	—	15	15	20	20	30	—	—	20	20	25	25	35	—	—	—	25	23	30	35

Note:
1. Slenderness ratio = thread length of shaft/nominal diameter of shaft [mm]
2. To calculate the idle torque, see Formula F 3.2
3. For more information, please contact HIWIN

3.8 Calculations

Bases of calculations in accordance with DIN ISO 3408.

3.8.1 Load ratings

Dynamic load rating C_{dyn} (theoretical)

The dynamic load rating describes the load at which 90 % of all ballscrews reach a life expectancy of 1×10^6 revolutions (C). The reliability factor can be taken into account in accordance with Table 3.18. The dynamic load rating is listed in the dimensions tables for the nuts.

Static load rating C_0

The static load rating describes the load which causes permanent deformation of the ball track of more than 0.0001 of the ball diameter. In order to calculate the maximum static load rating, the static structural safety S_0 of the application conditions must be taken into account.

F 3.3

$$S_0 \times F_{amax} < C_0$$

S_0 Static structural safety
C_0 Static load rating (dimensions table for nut)
F_{amax} Max. static axial load

3.8.2 Service life

a) Average speed n_m

F 3.4

$$n_m = n_1 \times \frac{t_1}{100} + n_2 \times \frac{t_2}{100} + n_3 \times \frac{t_3}{100} + \ldots$$

n_m Average speed, total [rpm]
n_n Average speed in phase n [rpm]
t_n Amount of time in phase n [%]

b) Preload

F 3.5

$$F_{pr} = \frac{f_{pr}}{100\,\%} \times C_{dyn}$$

F_{pr} Preload force
C_{dyn} Dynamic load rating
f_{pr} Preload factor in %
Single nut $f_{pr} \leq 5\,\%$
Double nut $f_{pr} \leq 10\,\%$

F 3.6

$$F_{lim} = 2^{3/2} \times F_{pr}$$

F_{lim} Disengagement force

Distinction of cases:

$F_n > F_{lim}$ No influence from preload: $F_{bn} = F_n$
$F_n < F_{lim}$ Influence from preload: Formula F 3.7

F 3.7

$$F_{bn} = \left(1 + \frac{F_n}{2^{3/2} \times F_{pr}}\right)^{3/2} \times F_{pr}$$

F_n Axial loading in phase n
F_{bn} Operating axial loading in phase n

F_n must be calculated for all phases and used in Formula F 3.7.

c) Average operating load F_{bm}

– With alternating load and constant speed

F 3.8

$$F_{bm} = \sqrt[3]{F_{b1}^3 \times \frac{t_1}{100} \times f_{p1}^3 + F_{b2}^3 \times \frac{t_2}{100} \times f_{p2}^3 + F_{b3}^3 \times \frac{t_3}{100} \times f_{p3}^3 \ldots}$$

F_{bm} Average operating load [N]
F_{bn} Operating axial loading in phase n
f_p Operating condition factor
f_p 1.1 – 1.2 operation without impact
1.3 – 1.8 operation under normal conditions
2.0 – 3.0 operation with high impact and with vibrations
3.0 – 5.0 short-stroke applications < 3 × nut length

– With alternating load and alternating speed:

F 3.9

$$F_{bm} = \sqrt[3]{F_{b1}^3 \times \frac{n_1}{n_m} \times \frac{t_1}{100} \times f_{p1}^3 + F_{b2}^3 \times \frac{n_2}{n_m} \times \frac{t_2}{100} \times f_{p2}^3 + F_{b3}^3 \times \frac{n_3}{n_m} \times \frac{t_3}{100} \times f_{p3}^3 \ldots}$$

d) Axial loading on both sides:

– Service life in revolutions

F 3.10

$$L_1 = \left(\frac{C_{dyn}}{F_{bm1}}\right)^3 \times 10^6 \qquad L_2 = \left(\frac{C_{dyn}}{F_{bm2}}\right)^3 \times 10^6$$

F 3.11

$$L = \left(L_1^{-10/9} + L_2^{-10/9}\right)^{-9/10}$$

L_1 Service life in revolutions, forward motion
L_2 Service life in revolutions, backward motion
C_{dyn} Dynamic load rating [N]
F_{bm1} Average operating load, forward motion
F_{bm2} Average operating load, backward motion
L Service life in revolutions

– Conversion of service life into operating hours

F 3.12

$$L_h = \frac{L}{n_m \times 60}$$

L_h Service life in operating hours
n_m Average speed [rpm], see Formula F 3.4

– Conversion of distance travelled [km] into operating hours:

F 3.13

$$L_h = \left(\frac{L_{km} \times 10^6}{P}\right) \times \frac{1}{n_m \times 60}$$

L_h Service life in operating hours
L_{km} Service life in distance travelled [km]
P Lead [mm]
n_m Average speed [rpm]

– The modified service life with different reliability factors is calculated using

F 3.14

$$L_m = L \times f_r \qquad L_{hm} = L_h \times f_r$$

f_r Reliability factor (see Table 3.18)

Table 3.18 **Reliability factor for calculating service life**

Resilience %	Reliability factor f_r
90	1.00
95	0.63
96	0.53
97	0.44
98	0.33
99	0.21

Flow chart for calculating service life

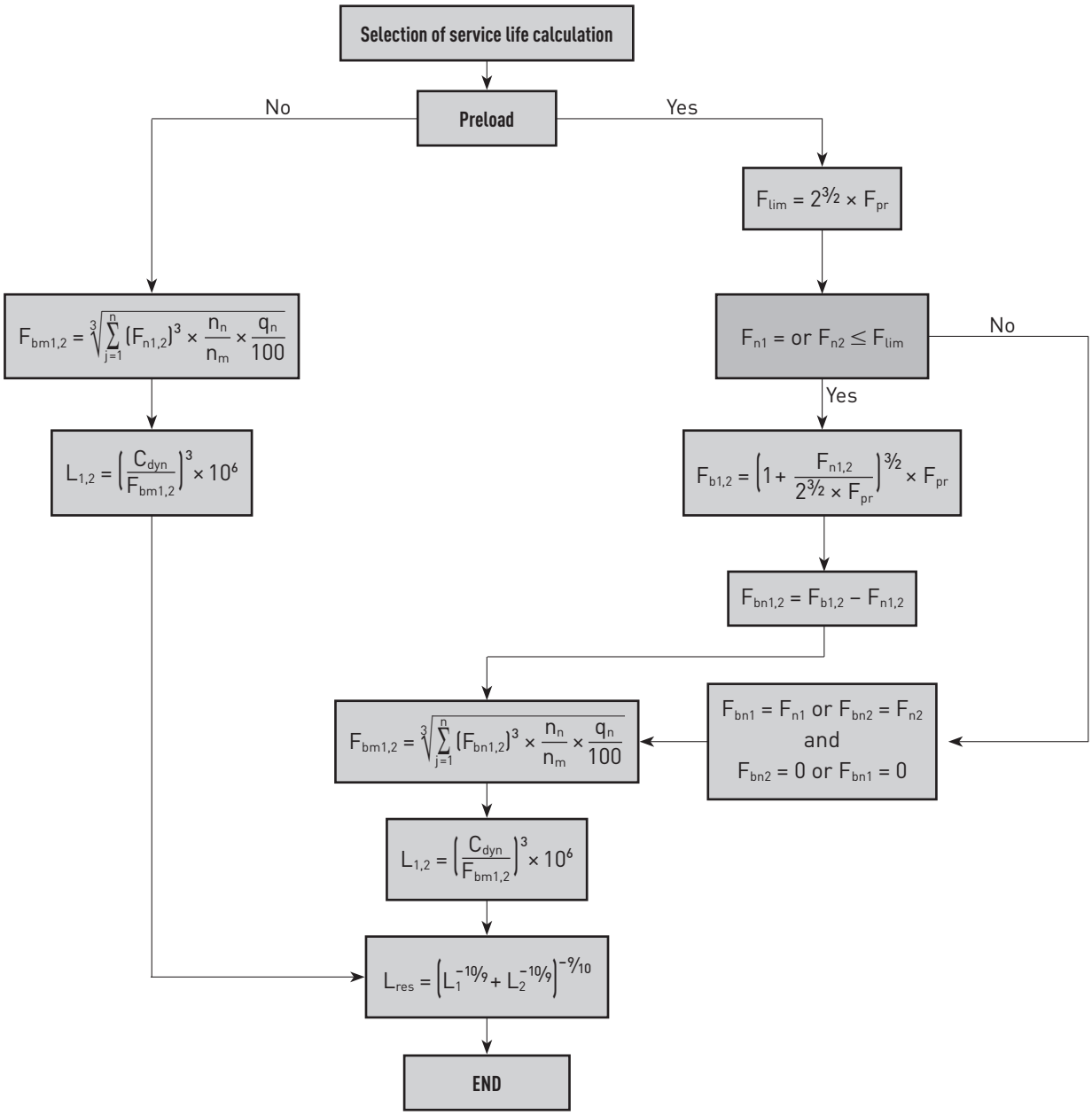

3.8.3 Drive torque and drive output of motor

Fig. 3.20 shows the influencing parameters of a feed system with ballscrew.
Below you will find the formula for calculating the drive torque required of the motor:

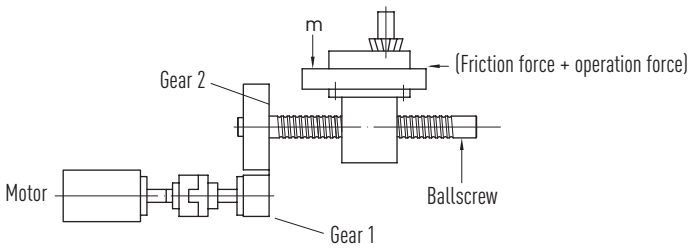

(1) Motor, (2) Gear 1, (3) Gear 2, (4) (Friction force + operation force),
(5) Ballscrew

Fig. 3.20 **Load trend of a system with ballscrew**

– Normal operation (conversion of rotary motion into linear motion)

F 3.15

$$T_a = \frac{F_w \times P}{2{,}000 \times \pi \times \eta_1}$$

T_a Drive torque for normal operation [Nm]
T_c Drive torque for reverse operation [Nm]
F_w Effective axial load [N], friction force + operating force
P Lead [mm]
η_1 Mechanical efficiency (0.85 – 0.95), normal operation
η_2 Mechanical efficiency (0.75 – 0.85), reverse operation

– Reverse operation (conversion of linear motion into rotary motion)

F 3.16

$$T_c = \frac{F_w \times P \times \eta_2}{2{,}000 \times \pi}$$

– Drive torque of motor
For normal operation:

F 3.17

$$T_M = (T_a + T_b + T_d)\,\frac{N_1}{N_2}$$

T_M Motor drive torque [Nm]
T_b Friction torque of support bearing [Nm]
T_d Idle torque [Nm]
N_1 Number of teeth on driving gear wheel
N_2 Number of teeth on driven gear wheel

For acceleration:

F 3.18

$$T'_a = J \times \alpha$$

F 3.19

$$\alpha = \frac{2\pi \times \Delta n}{60 \times t_a}$$

T'_a Motor drive torque during acceleration [Nm]
J Inertia torque of system [Nm²]
α Angular acceleration [rad/s²]
t_a Acceleration start-up time [s]
n_1 Initial speed [rpm]
n_2 Final speed [rpm]

F 3.20

$$\Delta n = n_2 - n_1$$

F 3.21

$$J = J_M + J_{G1} + J_{G2} \times \left(\frac{N_1}{N_2}\right)^2 + \frac{1}{2} m_r \times \left(\frac{d_n}{2000}\right)^2 \times \left(\frac{N_1}{N_2}\right)^2 + m_l \times \left(\frac{P}{2000\pi}\right)^2 \times \left(\frac{N_1}{N_2}\right)^2$$

= motor inertia + equivalent gear inertia + inertia of ballscrew (see Fig. 3.20)

m_r Mass of rotating parts [kg]
m_l Mass of components moved in linear fashion [kg]
d_n Nominal diameter of ballscrew [mm]
J_M Motor inertia [kgm²]
J_{G1} Inertia of drive gear [kgm²]
J_{G2} Inertia of driven gear[kgm²]

Total drive torque:

F 3.22

$$T_{Ma} = T_M + T'_a$$

T_{Ma} Total drive torque [Nm]

– Drive output

F 3.23

$$P_A = \frac{T_{pmax} \times n_{max}}{9{,}550}$$

P_A Maximum reliable drive output [kW]
T_{pmax} Maximum drive torque (safety factor × T_{max}) [Nm]
n_{max} Maximum speed [rpm]
t_a Acceleration start-up time [s]
J Total inertia torque [kgm²]
T_{M1} Nominal torque of motor [Nm]
T_L Drive torque at nominal speed [Nm]
f Safety factor = 1.5

– Acceleration time check

F 3.24

$$t_a = \frac{J}{T_{M1} - T_L} \times \frac{2\pi \times n_{max}}{60} \times f$$

3.8.4 Buckling load

F 3.25

$$F_k = 4.072 \times 10^5 \left(\frac{f_k \times d_k^4}{l_s^2} \right)$$

F 3.26

$$F_{kmax} = 0.5 \times F_k$$

F_k Permissible load [N]
F_{kmax} Max. permissible load [N]
d_k Core diameter of threaded shaft [mm]
l_s Unsupported shaft length [mm] (see Fig. 3.21)
f_k Factor for different types of assembly (buckling load)

Fixed bearing – fixed bearing	$f_k = 1.0$
Fixed bearing – supported bearing	$f_k = 0.5$
Supported bearing – supported bearing	$f_k = 0.25$
Fixed bearing – no bearing	$f_k = 0.0625$

3.8.5 Critical speed

F 3.27

$$n_k = 2.71 \times 10^8 \left(\frac{f_n \times d_k}{l_s^2} \right)$$

F 3.28

$$n_{kmax} = 0.8 \times n_k$$

n_k Critical speed [rpm]
n_{kmax} Max. permissible speed [rpm]
d_k Core diameter of threaded shaft [mm]
l_s Unsupported shaft length [mm] (see Fig. 3.21)
f_n Factor for different types of assembly (critical speed)

Fixed bearing – fixed bearing	$f_n = 1.0$
Fixed bearing – supported bearing	$f_n = 0.692$
Supported bearing – supported bearing	$f_n = 0.446$
Fixed bearing – no bearing	$f_n = 0.147$

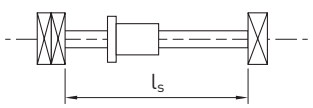

Fig. 3.21 **Definition of "Unsupported shaft length"**

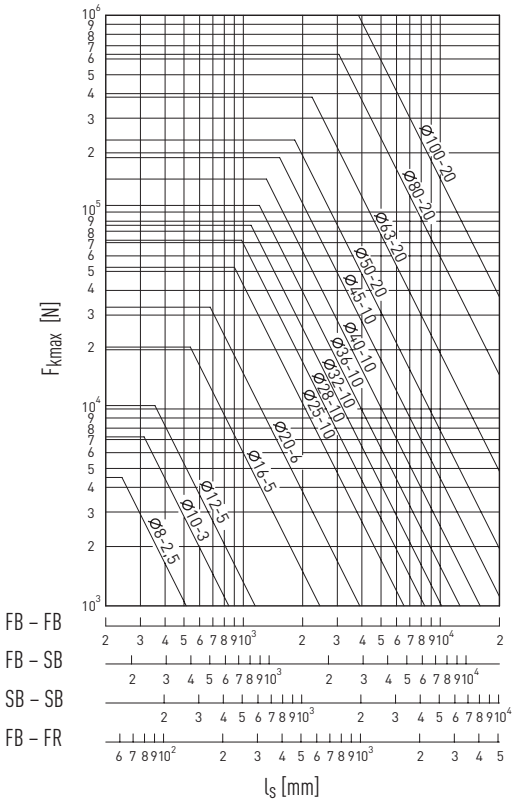

Fig. 3.22 **Buckling load for different diameters and lengths of threaded shafts**

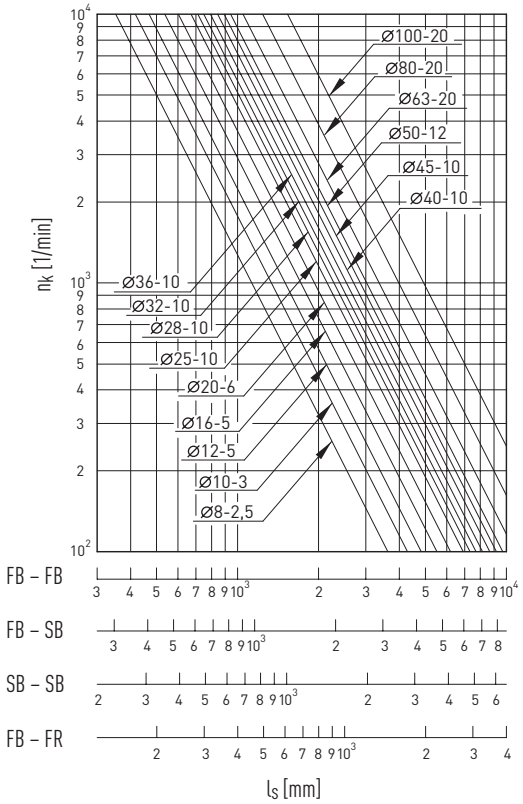

Fig. 3.23 **Critical speed for different diameters and lengths of threaded shafts**

l_s	Unsupported shaft length [mm]
F_{kmax}	Critical axial load [N]
n_k	Critical speed [rpm]
FB	Fixed bearing
FR	Free
SB	Support bearing
d_s	Shaft diameter [mm]
n_{max}	Max. speed [rpm]

3.8.6 D_N value for working speed of a ballscrew

The specific speed value D_N has a huge influence on the behaviour of the ballscrew in terms of noise and heat development and service life of the recirculation system.

For HIWIN ballscrews

F 3.29 $$D_N = d_s \times n_{max}$$

$D_N \leq 90{,}000$ for ballscrews with cassette recirculation
$D_N \leq 120{,}000$ for ballscrews with cassette recirculation and no axial play
$D_N \leq 150{,}000$ for high-speed ballscrews (upon request)

3.8.7 Rigidity

Rigidity describes the flexibility of a machine element. The overall rigidity of a ballscrew is determined by the axial rigidity of the nut/shaft system, the contact rigidity of the ball track and the rigidity of the threaded shaft. The following factors should also be taken into account when fitting the ballscrew in a machine: rigidity of support bearings, assembly conditions of nuts with table etc.
The rigidity of the nut/shaft unit and the ball and ball track can be combined to produce the rigidity of the nut Rn, which is listed in the dimensions tables for the different types of nuts.

– Rigidity of a ballscrew

F 3.30 $$\frac{1}{R_{bs}} = \frac{1}{R_s} + \frac{1}{R_n}$$

R_{bs}	Overall rigidity of a ballscrew [N/µm]
R_s	Rigidity of threaded shaft [N/µm]
R_n	Rigidity of nut [N/µm]

– Rigidity of threaded shaft

F 3.31

$$R_{s1} = \frac{\pi \times d_c^2 \times E}{4 \times l_1 \times 10^3}$$

fixed – floating/unsupported

F 3.32

$$R_{s2} = \frac{\pi \times d_c^2 \times E}{4 \times l_1 \times 10^3} \times \frac{l_2}{l_2 - l_1}$$

fixed – fixed

F 3.33

$$d_c = PCD - D_k \times \cos\alpha$$

R_s Rigidity of threaded shaft [N/µm]
d_c Diameter on which the force acts on the ballscrew shaft
E Elasticity module [N/mm²]
α Contact angle between ball and track [°]
PCD Ball centre diameter of circle [mm]
D_k Nominal diameter of ball [mm]
l_1 Distance between bearing and nut [mm]
l_2 Distance between bearing and bearing [mm]

– Rigidity of nut

The nut rigidity can be checked using an axial force corresponding to the maximum possible preload of 10 % of the dynamic load rating (C_{dyn}) (this is listed in the dimensions tables for the nuts). With a lower preload, the nut rigidity can be determined by extrapolation:

F 3.34

$$R_n = 0.8 \times R \times \left(\frac{F_{pr}}{0.1 \times C_{dyn}}\right)^{1/3}$$

R_n Rigidity of nut [N/µm]
R Rigidity in accordance with dimensions table [N/µm]
F_{pr} Preload [N]
C_{dyn} Dynamic load rating from dimensions table [N]

The rigidity of a single nut with play can be calculated as follows with an external axial load of 0.28 C_{dyn}:

F 3.35

$$R_n = 0.8 \times R \times \left(\frac{F_{bm}}{0.28 \times C_{dyn}}\right)^{1/3}$$

R_n Rigidity of nut [N/µm]
R Rigidity in accordance with dimensions table [N/µm]
F_{bm} Average operating load [N]
C_{dyn} Dynamic load rating from dimensions table [N]

The axial rigidity of a feed system includes that of the support bearing and assembly table. The total rigidity should be noted with care when configuring the system.

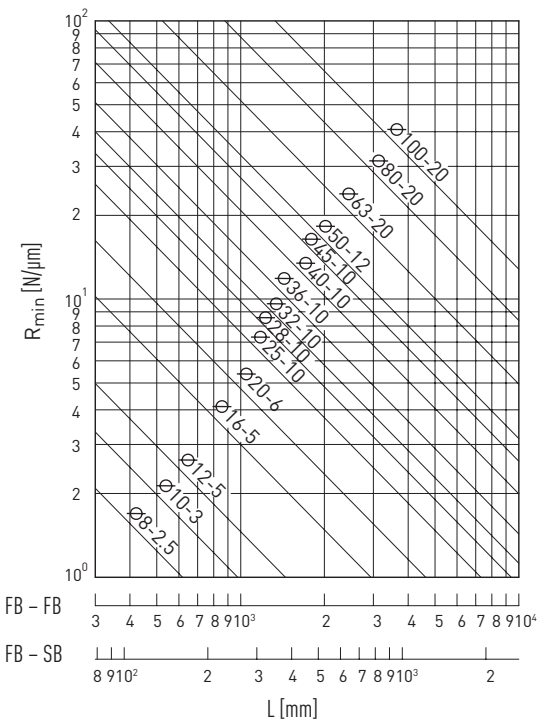

Fig. 3.24 **Rigidity diagram for ballscrews**

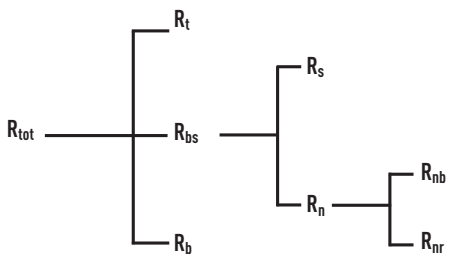

L Length of spindle [mm]
R_{min} Minimum rigidity of spindle [N/µm]
R_{tot} Total rigidity of feed system
R_t Rigidity of assembly table
R_b Rigidity of support bearing
R_{bs} Rigidity of ballscrew
R_s Rigidity of threaded shaft
R_n Rigidity of ballscrew nut
R_{nb} Rigidity of balls and ball track
R_{nr} Rigidity of nut/shaft system with radial load

Fig. 3.25 **Rigidity factors for feed systems with ballscrews**

3.8.8 Thermal expansion

An increase in temperature in ballscrew shafts during operation impacts on the accuracy of a machine's feed system, since the threaded shaft extends through the thermal stress.
The following factors affect the temperature increase in ballscrews:
1) Preload
2) Lubrication
3) Stretching of the shaft

Fig. 3.26 shows the relationship between operating speed, preload and temperature increase. Fig. 3.27 shows the temperature increase in the nut depending on idle torque.

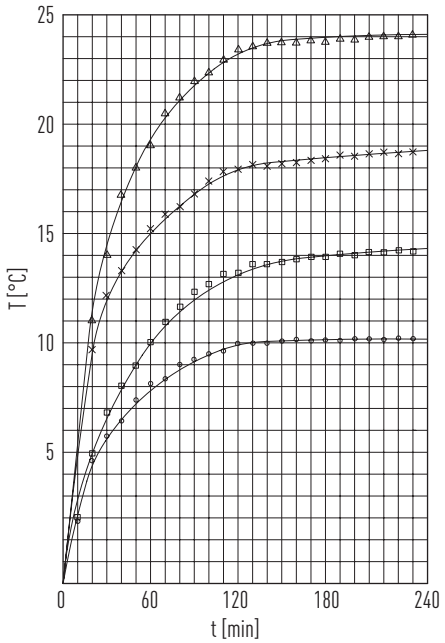

Ballscrew data R40-10-B2-FDW

Δ = 1,500 rpm with 2,000 N preload
× = 1,500 rpm with 1,000 N preload
□ = 500 rpm with 2,000 N preload
○ = 500 rpm with 1,000 N preload

Fig. 3.26 **Relationship between operating speed , preload and temperature increase**

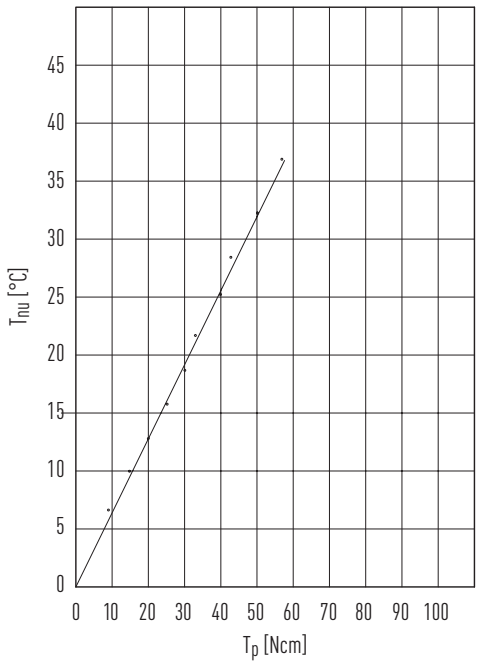

Spindle diameter	R40
Lead	10
Ball diameter	6.35
Circuits	2.5 × 2
Speed	2,000 U/min
Running time	1.5 sec
Stop time	1 sec
T_{nu}	Temperature in nut [°C]
T_p	Idle torque [Ncm]

Fig. 3.27 **Relationship between temperature increase in the ballscrew and idle torque**

The thermal expansion of the threaded shaft can be determined using formula F 3.36. The expansion can be compensated by stretching of the shaft. For further information please consult HIWIN.

F 3.36

$$\Delta L = 11.6 \times 10^{-6} \times \Delta T \times l_{s;total}$$

ΔL	Thermal expansion of threaded shaft [mm]
ΔT	Temperature increase in threaded shaft [°C]
$L_{s;total}$	Shaft length + shaft end (left/right) [mm]

3.9 Material and heat treatment

3.9.1 Materials of the components

Table 3.19 **Material overview**

	Material numbers according to DIN EN 10027		
Components	**Rolled ballscrews**	**Peeled ballscrews**	**Ground ballscrews**
Shaft	1.1213	1.1213 1.7225	1.7228
Nut [1]	1.6523 [1]		
Ball	1.3505		

[1] Special nuts 1.7131

3.9.2 Heat treatment

Table 3.20 shows the hardness of the main components used in HIWIN ballscrews. The surface hardness of the ballscrew affects both the dynamic and the static load rating. The dynamic and static load ratings listed in the dimensions tables are based on a surface hardness equivalent to HRC 60. For surface hardnesses of less than this, the load ratings can be determined using the following calculation.

F 3.37

$$C_0' = C_0 \times f_{H0} \qquad f_{H0} = \left(\frac{H_R}{60}\right)^3 \leq 1$$

With hardness levels f_H and f_{H0}
C_0' Corrected static load rating
C_0 Static load rating at 60 HRC
H_r Real hardness (HRC)

F 3.38

$$C' = C_{dyn} \times f_H \qquad f_H = \left(\frac{H_R}{60}\right)^2 \leq 1$$

C' Corrected dynamic load rating
C_{dyn} Dynamic load rating at 60 HRC
H_r Real hardness (HRC)

Table 3.20 **Hardness levels of components used for HIWIN ballscrews**

Components	Hardening method	Hardness (HRC)
Shaft	Carburizing	58 – 62
Nut	Carburizing or induction hardening	58 – 62
Ball		62 – 66

3.10 Lubrication

HIWIN ballscrews can be lubricated with grease, semi-fluid grease or oil depending on the application. They are supplied preserved as standard and must never be taken into service without initial lubrication. For information about the initial greasing, amounts of lubricant and lubrication intervals, please consult the assembly instructions "Ballscrews".

Table 3.21 **Information about checking and topping up lubricant**

Lubrication method	Information about checking
Oil	Check oil level once a week and check oil for contamination If contaminated, we recommend changing the oil
Grease	Check grease for contamination every two to three months If contaminated, replace old grease with new grease Always replace grease on an annual basis

4. Rolled ballscrews

4.1 Properties

One of the benefits of rolled ballscrews is that feed systems equipped with them have less friction and are quieter than standard threads.
HIWIN manufactures them using state-of-the-art rolling technologies where the processes of material selection, rolling, heat treatment, machining and assembly are very closely coordinated.

Rolled ballscrews from HIWIN can be flexibly used in virtually all areas of industry. Rolled ballscrew shafts with diameters of 8 mm to 63 mm are always kept in stock and can be supplied at short notice. They can be supplied with or without end machining. Complete bearing units combined with standardised shaft ends enable us to supply complete ballscrews.

4.2 Tolerance classes

Table 4.1 shows the tolerance classes of rolled ballscrews. The lead accuracy is defined using the deviation from nominal path over any 300 mm section of the entire length. The path deviation over the entire useful path is determined by formula F 3.1 on Page 17.

Table 4.1 **Tolerance classes of rolled ballscrews**

Path deviation	Tolerance class		
	T5	**T7**	**T10**
v_{300p}	0.023	0.052	0.21

Unit: mm

Table 4.2 **Overview of available rolled ballscrews**

Nominal diameter	Lead																		Max. shaft length	
	1	**1.25**	**2**	**2.5**	**3**	**4**	**5**	**5.08**	**6**	**8**	**10**	**12**	**16**	**20**	**25**	**32**	**40**	**50**	**T5**	**T7, T10**
8			O	O×	O		O												—	800
10			O	O×	O	O×	O		O		O								600	1,500
12			O	O	O	O×	O×	O		O	O×	O							600	1,500
15							O×				O			O					1,500	3,000
16	O		O	O		O	O×	O	O	O	O×	O	O×	O×		O			1,500	3,000
20				O		O	O×	O	O	O	O×			O×			O		1,500	3,000
25				O		O	O×	O	O	O	O×				O×				2,500	4,500
32						O	O×	O	O	O	O×			O×		O×	O		2,500	4,500
40							O×		O	O	O×	O	O	O×	O		O×		3,000	5,600
50							O×		O		O×	O	O	O×			O×	O	4,000	5,600
63											O×	O	O	O			O		4,000	5,600

Unit: mm

O Right-hand and left-hand thread
O Only right-hand thread
× Preferred type for right-hand thread with fast delivery in T7
× Preferred type for right-hand thread with fast delivery in T5 and T7

4.3 HIWIN order code for rolled ballscrews

In order to clearly identify the ballscrew, information about the ballscrew shaft and nut is needed.

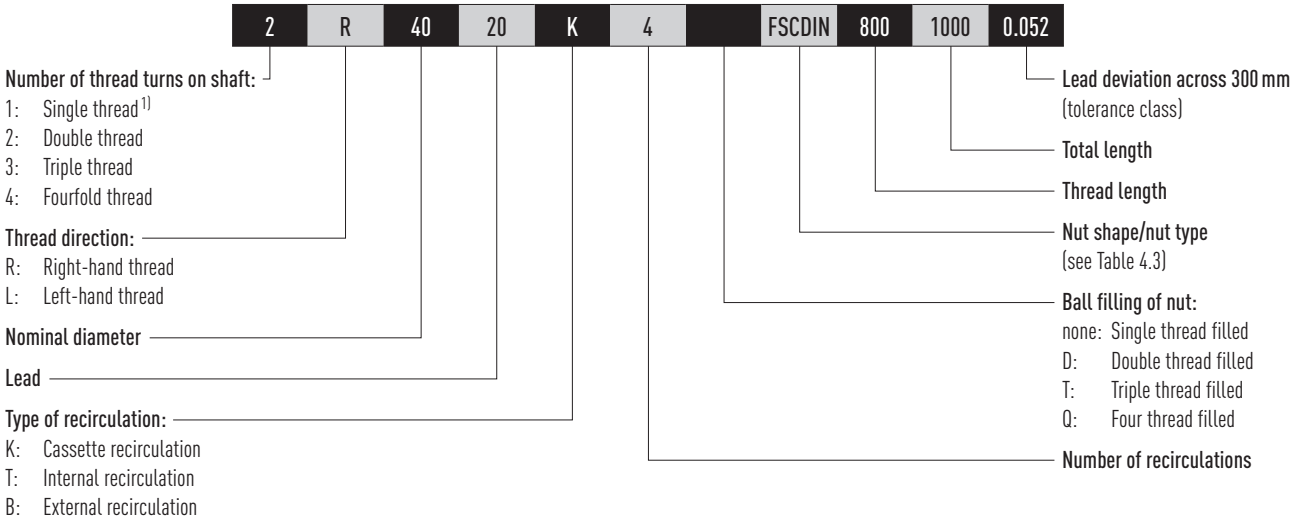

Order code for ballscrew shaft without the nut

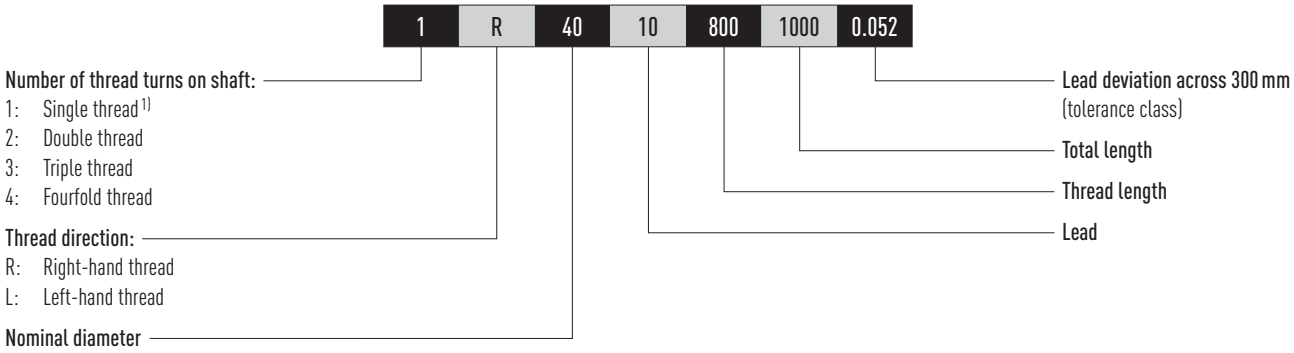

Order code for ballscrew nut without the shaft

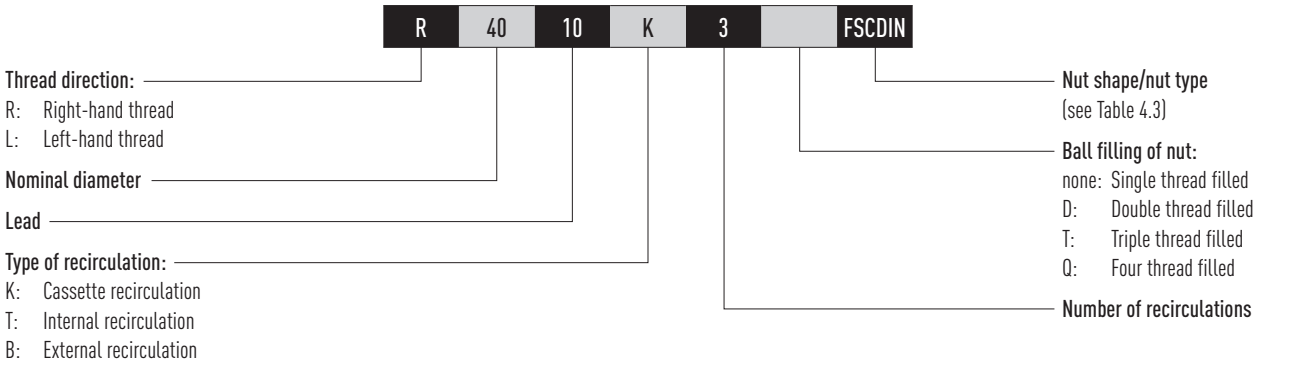

1) Standard; can be omitted with single-thread shafts

Table 4.3 **Overview of nut shapes**

Nut designation	Description
FSIDIN	Flange single nut with internal single recirculation
FSCDIN	Flange single nut with cassette recirculation
RSI	Cylindrical single nut with internal single return
RSIT	Cylindrical single nut with screw-in thread and internal single return

4.4 Nuts for rolled ballscrews

4.4.1 Flange single nut FSCDIN/FSIDIN

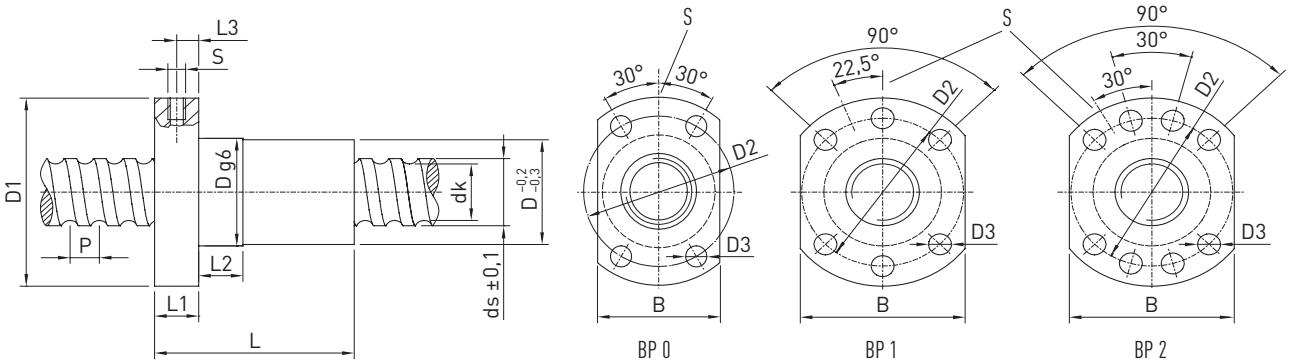

Table 4.4 **Nut dimensions**

Type	ds	P	D	D1	D2	D3	Hole pattern BP	L	L1	L2	L3	Lubrication hole S	B	dk	C_{dyn} [N]	C_0 [N]	Max. axial play [mm]	Mass [kg/piece]
R12-05K4-FSCDIN	11.7	5	24	40	32	4.5	0	33	8	8	4	M3	26	9.9	6,900	12,000	0.02	0.11
R12-10K3-FSCDIN	11.8	10	24	40	32	4.5	0	43	8	8	4	M3	26	9.6	6,400	10,100	0.02	0.13
R15-05K4-FSCDIN	13.9	5	28	48	38	5.5	1	38	10	10	5	M6	40	11.8	12,600	21,000	0.04	0.18
R16-05T3-FSIDIN	15.5	5	28	48	38	5.5	1	40	10	10	5	M6	40	12.9	8,100	11,700	0.04	0.18
R16-10K3-FSCDIN	14.7	10	28	48	38	5.5	1	45	10	10	5	M6	40	12.5	9,900	19,300	0.04	0.20
R16-16K3-FSCDIN	15.0	16	28	48	38	5.5	1	61	12	20	6	M6	40	13.0	9,900	17,000	0.04	0.26
R16-20K2-FSCDIN	14.0	20	28	48	38	5.5	1	56	10	10	5	M6	40	11.8	6,500	10,400	0.04	0.25
R20-05K4-FSCDIN	19.6	5	36	58	47	6.6	1	40	10	10	5	M6	44	16.9	16,400	32,740	0.04	0.28
R20-10K3-FSCDIN	19.3	10	36	58	47	6.6	1	48	10	10	5	M6	44	16.6	12,100	23,500	0.04	0.32
R20-20K2-FSCDIN	19.7	20	36	58	47	6.6	1	57	10	10	5	M6	44	17.1	8,400	15,300	0.04	0.37
R20-20K4-DFSCDIN	19.7	20	36	58	47	6.6	1	57	10	10	5	M6	44	17.1	15,300	30,500	0.04	0.36
R25-05K4-FSCDIN	24.9	5	40	62	51	6.6	1	43	10	12	5	M6	48	22.3	18,200	40,700	0.04	0.22
R25-10K4-FSCDIN	24.5	10	40	62	51	6.6	1	61	10	16	5	M6	48	21.8	18,100	44,900	0.04	0.43
R25-25K2-FSCDIN	24.7	25	40	62	51	6.6	1	70	10	16	5	M6	48	22.1	9,300	19,100	0.04	0.48
R25-25K4-DFSCDIN	24.7	25	40	62	51	6.6	1	70	10	16	5	M6	48	22.1	16,900	38,200	0.04	0.46
R32-05K6-FSCDIN	31.7	5	50	80	65	9	1	48	12	10	6	M6	62	29.1	29,200	81,900	0.04	0.59
R32-10K5-FSCDIN	31.8	10	50	80	65	9	1	77	12	16	6	M6	62	28.6	33,000	80,100	0.04	0.82
R32-20K3-FSCDIN	31.8	20	50	80	65	9	1	88	12	16	6	M6	62	28.6	20,900	48,500	0.04	0.91
R32-32K2-FSCDIN	31.9	32	50	80	65	9	1	88	12	20	6	M6	62	28.7	14,200	31,800	0.04	0.90

All dimensions stated without a unit are in mm

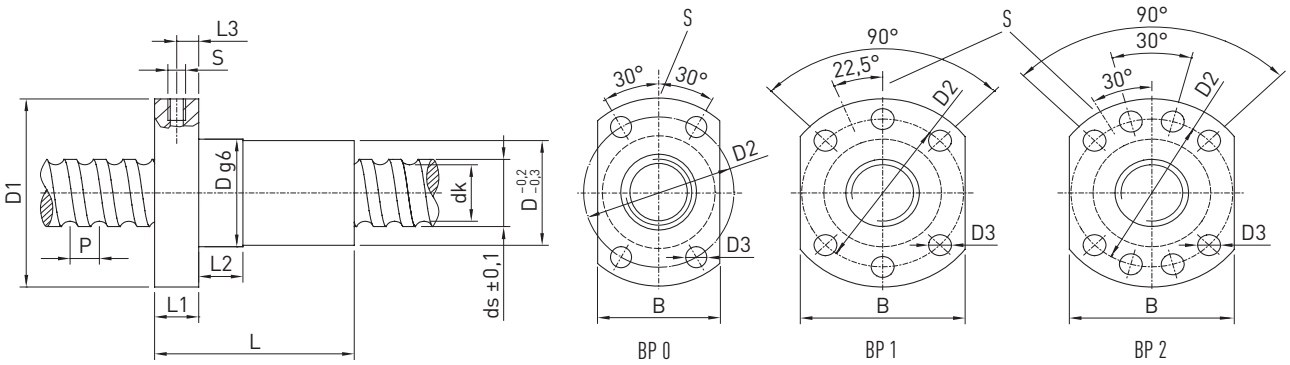

Table 4.4 **Nut dimensions**

Type	ds	P	D	D1	D2	D3	Hole pattern BP	L	L1	L2	L3	Lubrication hole S	B	dk	C_{dyn} [N]	C_0 [N]	Max. axial play [mm]	Mass [kg/piece]
R32-32K4-DFSCDIN	31.9	32	50	80	65	9	1	88	12	20	6	M6	62	28.7	25,700	62,200	0.04	0.87
R40-05K6-FSCDIN	39.4	5	63	93	78	9	2	50	14	10	7	M8 × 1	70	36.8	31,700	100,600	0.04	0.93
R40-10K4-FSCDIN	37.8	10	63	93	78	9	2	70	14	16	7	M8 × 1	70	32.8	55,700	123,000	0.04	1.19
R40-20K3-FSCDIN	37.8	20	63	93	78	9	2	88	14	16	7	M8 × 1	70	32.8	42,200	90,000	0.07	1.43
R40-40K2-FSCDIN	37.9	40	63	93	78	9	2	102	14	16	7	M8 × 1	70	32.9	28,500	58,400	0.07	1.61
R40-40K4-DFSCDIN	37.9	40	63	93	78	9	2	102	14	16	7	M8 × 1	70	32.9	51,700	115,800	0.07	1.59
R50-05K6-FSCDIN	49.4	5	75	110	93	11	2	50	16	10	8	M8 × 1	85	46.8	34,600	127,200	0.07	1.32
R50-10K6-FSCDIN	48.0	10	75	110	93	11	2	90	16	20	8	M8 × 1	85	42.9	89,800	250,000	0.07	2.05
R50-20K5-FSCDIN	47.9	20	75	110	93	11	2	132	18	25	9	M8 × 1	85	42.9	75,700	217,500	0.07	2.89
R50-40K3-FSCDIN	50.0	40	75	110	93	11	2	149	18	45	9	M8 × 1	85	45.0	48,300	123,000	0.07	2.96
R50-40K6-DFSCDIN	50.0	40	75	110	93	11	2	149	18	45	9	M8 × 1	85	45.0	87,800	242,600	0.07	2.93
R63-10T6-FSIDIN	63.1	10	90	125	108	11	2	120	18	16	9	M8 × 1	95	58.0	75,900	214,090	0.07	3.30

All dimensions stated without a unit are in mm

- Nuts with NBR wiper
- For nut housing, see Section 8.4
- No axial play on request (T5)
- FSCDIN/FSIDIN: Nut filled on one turn
- DFSCDIN: Nut filled on two turns
- R12 to R40 also available in T5

Order example:

R	25	10	K3	FSCDIN	650	730	0.052

4.4.2 Cylindrical single nut with screw-in thread RSIT

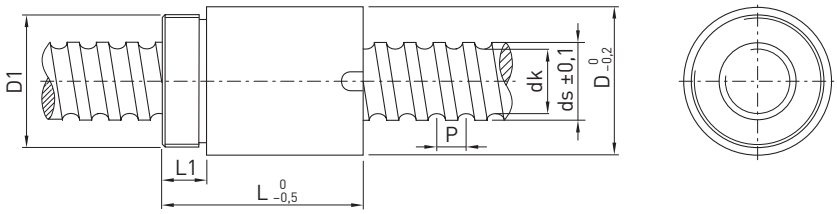

Sufficient lubricant supply to the shaft must be guaranteed via a lubricant channel in the adjacent construction.

Table 4.5 **Nut dimensions**

Type	ds	P	D	D1	L	L1	dk	Dynamic load rating C_{dyn} [N]	Static load rating C_0 [N]	Max. axial play [mm]	Mass [kg/piece]
R08-02.5T2-RSIT [1]	7.7	2.5	17.5	M15 × 1	27.5	7.5	6.1	1,600	1,750	0.04	0.03
R10-02.5T2-RSIT [2]	9.9	2.5	19.5	M17 × 1	25.0	7.5	8.1	2,100	2,630	0.04	0.04
R10-04T2-RSIT [2]	9.9	4.0	24.0	M22 × 1	32.0	10.0	7.7	2,400	2,820	0.04	0.08
R12-04B1-RSIT [1]	12.0	4.0	25.5	M20 × 1	34.0	10.0	9.5	4,200	5,700	0.04	0.08

All dimensions stated without a unit are in mm
[1] Polyamide wiper on one side
[2] Without dirt wiper

- Reduced axial play on request
- Nuts with dirt wipers

Order example:

R	12	4	B1	RSIT	350	405	0.052

4.4.3 Cylindrical single nut RSI

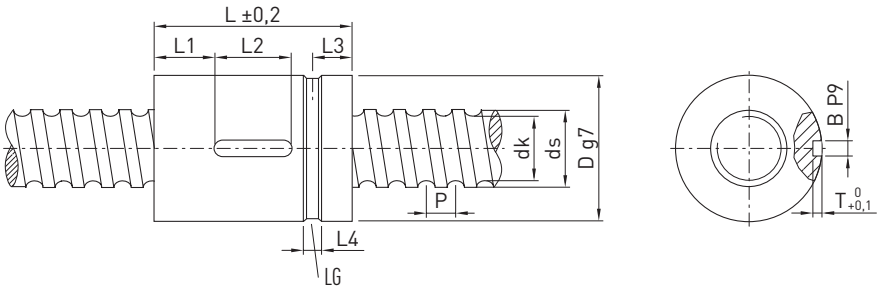

LG Groove for lubricant supply

Table 4.6 **Nut dimensions**

Type	ds	P	D	L	L1	L2	L3	L4	T	B	dk	Dynamic load rating C_{dyn} [N]	Static load rating C_0 [N]	Max. axial play [mm]	Mass [kg/piece]
R16-10T3-RSI	15.4	10	28	60	8	20	9.5	5	2.5	4	12.9	7,600	10,800	0.04	0.17
R20-10T3-RSI	19.9	10	34	60	20	20	12.0	4	2.0	5	17.5	11,300	12,600	0.04	0.35

All dimensions stated without a unit are in mm

- Reduced axial play on request
- Nuts with dirt wipers

Order example:

R	16	10	T3	RSI	350	405	0.052

5. Peeled ballscrews

5.1 Properties

In terms of quality, peeled ballscrews from HIWIN fall between rolled and ground ballscrews and can therefore be used for numerous transport or positioning applications. On request, we are happy to produce a lead measurement report for them. A number of nut shapes are available for peeled ballscrews, as both single and double nuts. Customised complete ballscrews can be produced with short lead times. Complete bearing units combined with standardised shaft ends minimise the amount of design work involved.

5.2 Tolerance classes

Table 5.1 shows the tolerance classes of peeled ballscrews. The lead accuracy is defined using the deviation from nominal path over any 300 mm section of the entire length.

Table 5.1 **Tolerance classes of peeled ballscrews**

Path deviation	Tolerance class	
	T5	**T7**
v_{300p}	0.023	0.052

Unit: mm

Table 5.2 **Overview of available peeled ballscrews**

Nominal diameter	Lead			Max. shaft length [1]	Max. thread length
	5	**10**	**20**		
16	O×			6,000	4,700
20	O×			6,000	5,100
25	O×	O×		6,000	5,100
32	O×	O×	O×	6,000	5,100
40	O×	O×	O×	6,000	5,100
50	O×	O×	O×	6,000	5,100
63		O×	O×	6,000	5,100
80		O×	O×	6,000	5,100

Unit: mm

Larger lengths are available on request

O Right-hand and left-hand thread
× Preferred type for right-hand thread with fast delivery

[1] The critical speed and max. buckling force should be taken into account for long shafts.

5.3 HIWIN order code for peeled ballscrews

In order to clearly identify the ballscrew, information about the ballscrew shaft and nut is needed..

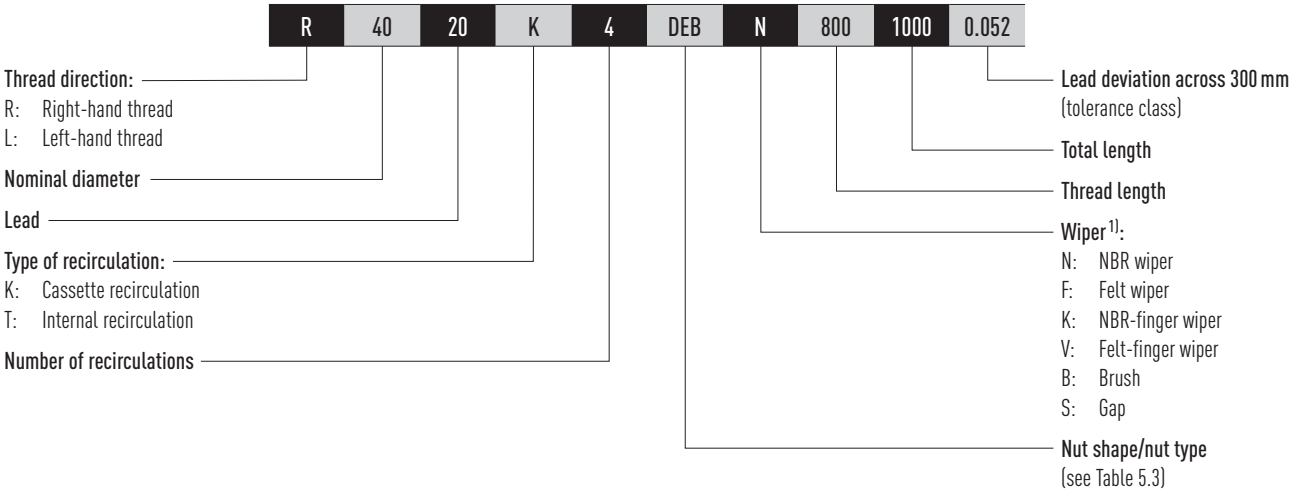

Order code for ballscrew shaft without the nut

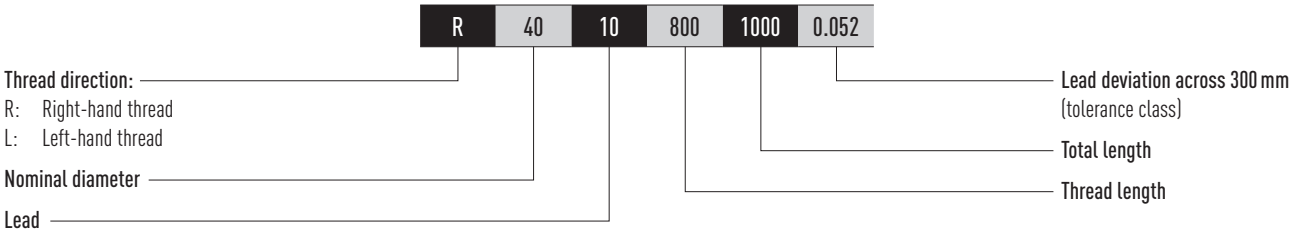

Order code for ballscrew nut without the shaft

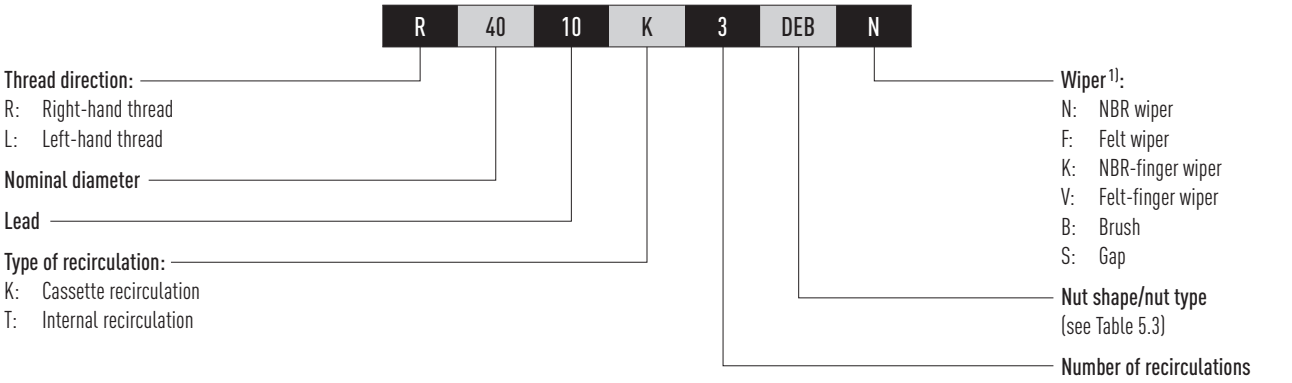

[1] The wiper used is shown in the following tables for the individual nut types. For the DEB-x and DDB-x nut types, you can choose between N, K, F or V wipers, depending on the thread pitch.

Table 5.3 **Overview of nut shapes**

Nut designation	Description
DEB-x	Flange single nut with variable wiper type
DDB-x	Flange double nut with variable wiper type
ZE	Cylindrical single nut
SE	Cylindrical single nut with screw-in thread
SEM	Flange single nut with integrated locking nut[2]

[2] Simply using a safety nut does not provide sufficient protection against a load being lowered unintentionally. The safety guidelines valid for the application must be observed. The safety nut it is not a safety component according to the Machinery Directive.

5.4 Nuts for peeled ballscrews

5.4.1 Flange single nut DEB-x

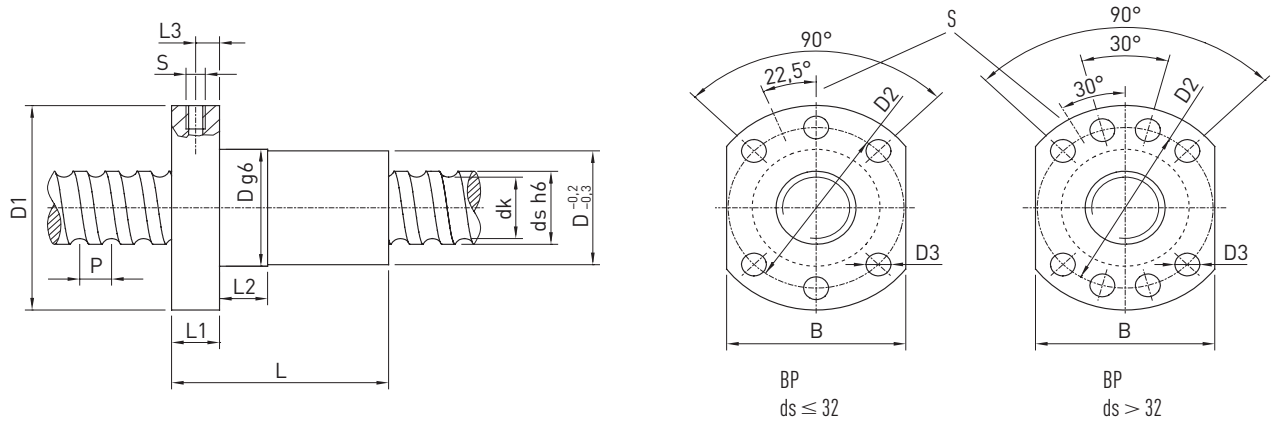

Fig. 5.1 **Flange single nut DEB-x with Wiper N and F**

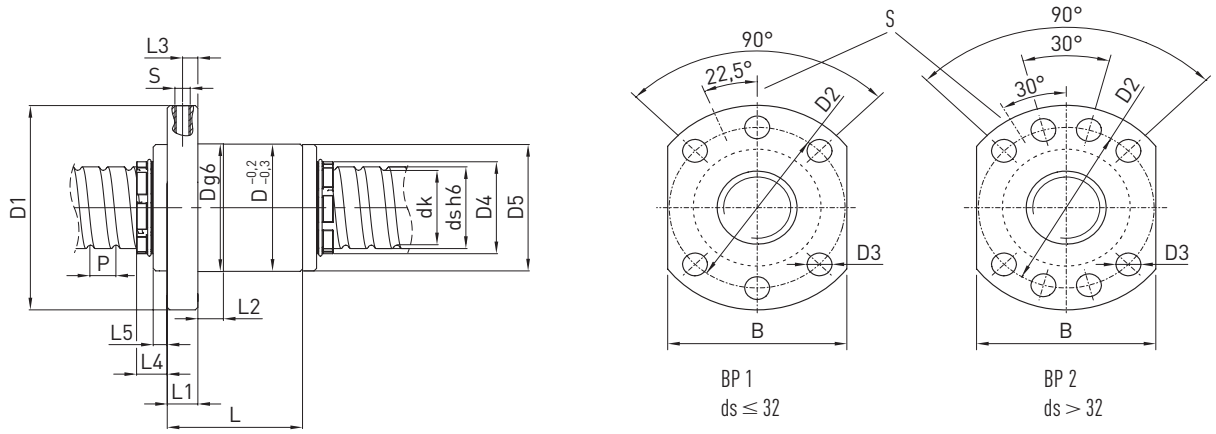

Fig. 5.2 **Flange single nut DEB-x with Wiper K and V**

BP Hole pattern

Table 5.4 **Nut dimensions (wiper variants N and F or K and V)**

Type	ds	P	D	D1	D2	D3	L	L1	L2	L3	L4 [1]	L5 [1]	Lubrication hole S	B	dk	Dynamic load rating C_{dyn} [N]	Static load rating C_0 [N]	Max. axial play [mm]	Mass [kg/piece]	N/K	F/V
R16-05K4-DEB-x [2]	15	5	28	48	38	5.5	47	10	10	5.0	14	8	M6	40	12.5	13,800	16,400	0.02	0.15	x	x
R16-10K3-DEB-x	15	10	28	48	38	5.5	53	10	10	5.0	14	8	M6	40	12.9	10,800	12,800	0.02	0.17	x	x
R16-16K2-DEB-x	15	16	28	48	38	5.5	55	10	10	5.0	14	8	M6	40	12.9	7,100	8,300	0.02	0.18	x	
R20-05K4-DEB-x [2]	20	5	36	58	47	6.6	48	10	10	5.0	10.5	5	M6	44	17.3	17,300	23,300	0.02	0.29	x	x
R20-10K3-DEB-x	20	10	36	58	47	6.6	55	10	10	5.0	10.5	5	M6	44	17.3	13,100	17,400	0.02	0.30	x	x
R20-20K2-DEB-x	20	20	36	58	47	6.6	65	10	10	5.0	12	6	M6	44	17.3	8,800	16,100	0.02	0.32	x	
R25-05K4-DEB-x [2]	25	5	40	62	51	6.6	53	10	10	5.0	11.5	6	M6	48	22.3	19,200	29,800	0.02	0.32	x	x
R25-10K4-DEB-x	25	10	40	62	51	6.6	70	10	10	5.0	12	6	M6	48	22.3	19,000	29,700	0.02	0.38	x	x
R25-25K2-DEB-x	25	25	40	62	51	6.6	79	10	10	5.0	12	6	M6	48	22.3	9,700	14,900	0.02	0.41	x	
R32-05K5-DEB-x [2]	32	5	50	80	65	9.0	53	12	10	6.0	12.5	6	M6	62	29.3	26,200	48,700	0.02	0.60	x	x

[1] Only for wiper variants K and V
[2] Left-hand nut available ex warehouse (only for wiper variant N and F)

All dimensions stated without a unit are in mm

Table 5.4 **Nut dimensions (wiper variants N and F or K and V)**

Type	ds	P	D	D1	D2	D3	L	L1	L2	L3	L4[1]	L5[1]	Lubrication hole S	B	dk	Dynamic load rating C_{dyn} [N]	Static load rating C_0 [N]	Max. axial play [mm]	Mass [kg/piece]	N/K	F/V
R32-10K5-DEB-x[2]	32	10	50	80	65	9.0	83	14	20	7.0	11	6	M6	62	28.7	35,800	72,800	0.02	0.68	x	x
R32-10K5-DEBH-x	32	10	56	86	71	9.0	87	14	20	7.0	12	6	M6	65	26.9	65,600	108,800	0.02	0.75	x	x
R32-20K2-DEB-x	32	20	56	86	71	9.0	72	14	20	7.0	11	6	M6	65	26.9	27,800	43,000	0.02	0.75	x	
R40-05K5-DEB-x[2]	40	5	63	93	78	9.0	56	14	10	7.0	11	5	M8 × 1	70	37.3	28,700	61,700	0.02	0.90	x	x
R40-10K4-DEB-x[2]	38	10	63	93	78	9.0	81	14	20	7.0	11	5	M8 × 1	70	32.9	58,700	105,800	0.02	1.13	x	x
R40-20K2-DEB-x	38	20	63	93	78	9.0	79	14	20	7.0	12	5	M8 × 1	70	32.9	30,500	52,400	0.03	1.10	x	
R40-40K2-DEB-x	38	40	63	93	78	9.0	113	14	20	7.0	11	5	M8 × 1	70	32.9	30,100	53,300	0.04	1.60	x	
R50-05K5-DEB-x	50	5	75	110	93	11.0	58	16	10	8.0	12	6	M8 × 1	85	47.3	31,400	77,900	0.02	1.20	x	x
R50-10K5-DEB-x	50	10	75	110	93	11.0	93	16	20	8.0	12	6	M8 × 1	85	44.9	82,000	179,100	0.02	1.80	x	x
R50-20K3-DEB-x	50	20	75	110	93	11.0	101	16	20	8.0	12	6	M8 × 1	85	44.9	51,200	106,900	0.03	1.95	x	
R63-10K6-DEB-x	63	10	90	125	108	11.0	103	18	10	9.0	13	7	M8 × 1	95	57.9	105,700	271,500	0.04	2.90	x	x
R63-20T5-DEB-x	63	20	95	135	115	13.5	169	20	25	10.0	15	9	M8 × 1	100	55.5	150,200	315,400	0.04	4.10	x	
R63-20K6-DEBH-x	63	20	125	165	145	13.5	185	25	25	12.5	18	10	M8 × 1	130	53.2	295,900	723,500	0.04	9.50	x	
R80-10K6-DEB-x	80	10	105	145	125	13.5	105	20	12	10.0	14	6	M8 × 1	110	74.9	118,000	355,800	0.04	3.00	x	x
R80-20K5-DEB-x	80	20	125	165	145	13.5	157	25	25	12.5	17	9	M8 × 1	130	72.5	176,400	437,400	0.05	7.80	x	
R80-20K6-DEBH-x	78	20	135	175	155	13.5	175	25	25	12.5	19	11	M8 × 1	140	68.2	336,500	931,200	0.05	13.50	x	
R80-20K7-DEBH-x	78	20	135	175	155	13.5	195	25	25	12.5	19	11	M8 × 1	140	68.2	384,100	1,086,400	0.05	15.00	x	

[1] Only for wiper variants K and V
[2] Left-hand nut available ex warehouse (only for wiper variant N and F)

All dimensions stated without a unit are in mm

- Reduced axial play on request
- Nuts with interchangeable dirt wipers
- For nut housing, see Section 8.4

Order example:

R	63	10	T6	DEB	N	3850	3972	0.052

5.4.2 Flange double nut DDB-x

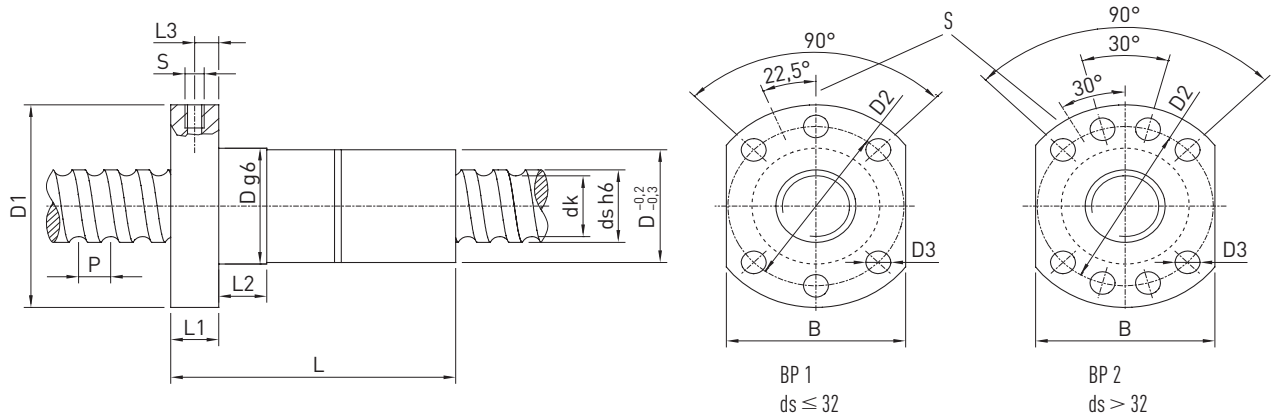

Fig. 5.3 **Flange double nut DDB-x with Wiper N and F**

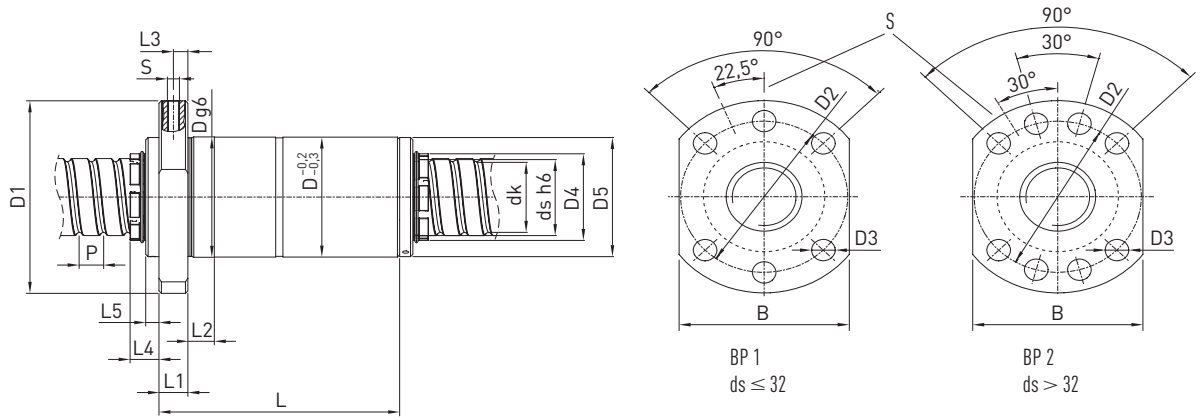

Fig. 5.4 **Flange double nut DDB-x with Wiper K and V**

BP Hole pattern

Table 5.5 **Nut dimensions (wiper variants N and F or K and V)**

Type	ds	P	D	D1	D2	D3	L	L1	L2	L3	L4 [1]	L5 [1]	Lubrication hole S	B	dk	Dynamic load rating C_{dyn} [N]	Static load rating C_0 [N]	Mass [kg/piece]	N/K	F/V
R16-05K4-DDB-x	15	5	28	48	38	5.5	75	10	10	5	14	8	M6	40	12.5	13,800	16,400	0.3	x	x
R20-05K4-DDB-x	20	5	36	58	47	6.6	87	10	10	5	10.5	5	M6	44	17.3	17,300	23,300	0.5	x	x
R25-05K4-DDB-x	25	5	40	62	51	6.6	96	10	10	5	11.5	6	M6	48	22.3	19,200	29,800	0.68	x	x
R25-10K4-DDB-x	25	10	40	62	51	6.6	130	10	10	5	12	6	M6	48	22.3	19,000	29,700	0.7	x	x
R32-05K5-DDB-x	32	5	50	80	65	9.0	96	12	10	6	12.5	6	M6	62	29.3	26,200	48,700	1.2	x	x
R32-10K5-DDB-x	32	10	50	80	65	9.0	156	14	20	7	11	6	M6	62	28.7	35,800	72,800	1.3	x	x
R32-10K4-DDBH-x	32	10	56	86	71	9.0	144	14	20	7	12	6	M6	62	26.9	53,600	87,000	1.4	x	x
R32-20K2-DDB-x	32	20	56	86	71	9.0	134	14	20	7	11	6	M6	65	26.9	27,600	43,000	1.4	x	
R40-05K5-DDB-x	40	5	63	93	78	9.0	101	14	10	7	11	5	M8 × 1	70	37.3	28,700	61,700	1.7	x	x
R40-10K4-DDB-x	38	10	63	93	78	9.0	150	14	20	7	11	5	M8 × 1	70	32.9	58,700	105,800	1.9	x	x
R40-20K2-DDB-x	38	20	63	93	78	9.0	146	14	20	7	12	5	M8 × 1	70	32.9	30,500	52,400	2.0	x	
R50-05K5-DDB-x	50	5	75	110	93	11.0	103	16	10	8	12	6	M8 × 1	85	47.3	31,400	77,900	2.1	x	x
R50-10K4-DDB-x	50	10	75	110	93	11.0	153	16	20	8	12	6	M8 × 1	85	44.9	67,000	143,300	3.2	x	x
R50-20K3-DDB-x	50	20	75	110	93	11.0	189	16	20	8	12	6	M8 × 1	85	44.9	51,200	106,900	4.8	x	

[1] Only for wiper variants K and V

All dimensions stated without a unit are in mm

Table 5.5 **Nut dimensions (wiper variants N and F or K and V)**

Type	ds	P	D	D1	D2	D3	L	L1	L2	L3	L4 [1]	L5 [1]	Lubrication hole S	B	dk	Dynamic load rating C_{dyn} [N]	Static load rating C_0 [N]	Mass [kg/piece]	N/K	F/V
R63-10K6-DDB-x	63	10	90	125	108	11.0	193	18	16	9	13	7	M8 × 1	95	57.9	105,700	271,500	6.8	x	x
R63-20T4-DDB-x	63	20	95	135	115	13.5	289	20	25	10	15	9	M8 × 1	100	55.5	105,000	250,000	8.0	x	
R80-10K6-DDB-x	80	10	105	145	125	13.5	195	20	25	10	14	6	M8 × 1	110	74.9	118,000	355,800	6.0	x	x
R80-20K4-DDB-x	80	20	125	165	145	13.5	259	25	25	12.5	17	9	M8 × 1	130	72.5	144,300	349,900	14.0	x	

[1] Only for wiper variants K and V

All dimensions stated without a unit are in mm

- Preloaded
- Nuts with dirt wipers
- Left-handed nuts on request
- For nut housing, see Section 8.4

Order example:

R	63	10	T6	DDB	N	3850	3972	0.052

5.4.3 Cylindrical single nut ZE

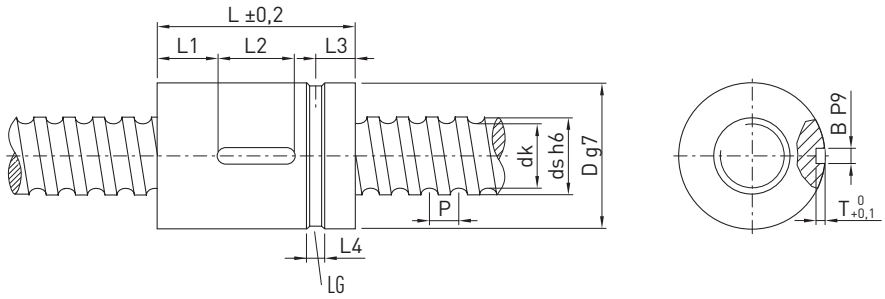

LG Groove for lubricant supply

Table 5.6 **Nut dimensions**

Type	ds	P	D	L	L1	L2	L3	L4	T	B	dk	Dynamic load rating C_{dyn} [N]	Static load rating C_0 [N]	Max. axial play [mm]	Mass [kg/piece]
R16-05T3-ZE-F[1)]	16	5	28	40	12.0	16	9	4	2.4	4	13.5	9,600	12,700	0.02	0.10
R20-05T4-ZE-F[1)]	20	5	36	51	15.0	20	10	4	2.4	4	17.5	13,900	21,800	0.02	0.23
R25-05T4-ZE-F[1)]	25	5	40	60	20.0	20	12	5	2.4	4	22.5	15,600	27,900	0.02	0.29
R25-10T3-ZE-F	25	10	48	65	22.0	20	15	5	2.4	4	21.0	24,100	36,200	0.02	0.50
R32-05T5-ZE-F[2)]	32	5	48	60	20.0	20	12	5	2.4	4	29.5	20,700	43,900	0.02	0.38
R32-10T4-ZE-F	32	10	56	80	27.0	25	15	5	2.4	4	27.8	40,900	63,200	0.02	0.74
R32-20T2-ZE-B[2)]	32	20	56	80	27.0	25	15	5	2.4	4	27.8	20,800	26,800	0.02	0.70
R40-05T5-ZE-F[1)]	40	5	56	68	24.0	20	15	6	2.4	4	37.5	22,500	54,600	0.02	0.44
R40-10T4-ZE-F[1)]	40	10	62	88	31.0	25	15	6	2.4	4	35.8	46,800	82,600	0.02	0.85
R40-20T2-ZE-B	40	20	62	88	31.0	25	15	6	2.4	4	35.8	24,300	36,400	0.03	0.88
R50-05T5-ZE-F	50	5	68	69	24.0	20	15	6	2.4	4	47.5	24,900	69,800	0.02	0.72
R50-10T4-ZE-F[2)]	50	10	72	100	37.0	25	17	6	2.4	4	45.8	52,800	106,800	0.02	1.04
R50-20T3-ZE-B	50	20	72	114	44.0	25	17	6	2.4	4	45.8	40,000	76,200	0.03	1.10
R63-10T6-ZE-F	63	10	85	120	44.0	32	17	6	3.5	6	58.8	84,700	210,800	0.04	1.73
R63-20T4-ZE-S	63	20	95	135	52.0	32	17	6	3.5	6	55.4	124,000	250,000	0.04	3.80
R80-10T6-ZE-F	80	10	105	120	44.0	32	17	8	3.5	6	75.8	93,400	269,200	0.04	2.80
R80-20T4-ZE-S	80	20	125	150	52.0	45	17	8	3.5	6	72.4	144,000	322,000	0.05	7.80
R80-20T6-ZEH-S	78	20	130	182	68.5	45	19	8	4.0	8	68.2	286,200	510,000	0.05	11.05

[1)] Left-hand nut available short-term
[2)] Left-hand nut available upon request

All dimensions stated without a unit are in mm

- Reduced axial play on request
- Nuts with dirt wipers

Order example:

R	16	05	T3	ZE	F	420	495	0.052

5.4.4 Cylindrical single nut with screw-in thread SE

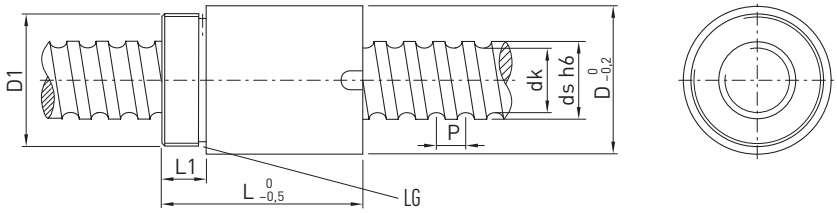

LG Groove for lubricant supply

Table 5.7 **Nut dimensions**

Type	ds	P	D	D1	L	L1	dk	Dynamic load rating C_{dyn} [N]	Static load rating C_0 [N]	Max. axial play [mm]	Mass [kg/piece]
R16-05T3-SE-F[1)]	16	5	36	M30 × 1.5	42	12	13.5	9,600	12,700	0.02	0.45
R20-05T4-SE-F[1)]	20	5	40	M35 × 1.5	52	12	17.5	13,900	21,800	0.02	0.53
R25-05T4-SE-F[2)]	25	5	45	M40 × 1.5	60	15	22.5	15,600	27,900	0.02	0.82
R25-10T3-SE-F[2)]	25	10	48	M45 × 1.5	70	15	21.0	24,100	36,200	0.02	1.00
R32-05T5-SE-F[2)]	32	5	52	M48 × 1.5	60	15	29.5	20,700	43,900	0.02	1.13
R32-10T3-SE-F[2)]	32	10	56	M52 × 1.5	80	15	27.8	34,100	56,100	0.02	1.62
R32-20T2-SE-B	32	20	56	M52 × 1.5	80	15	27.8	20,800	26,800	0.02	1.44
R40-05T5-SE-F[1)]	40	5	65	M60 × 1.5	68	18	37.5	22,500	54,600	0.02	1.63
R40-10T4-SE-F[1)]	40	10	65	M60 × 1.5	88	18	35.8	46,800	82,600	0.02	1.75
R40-20T2-SE-B[2)]	40	20	65	M60 × 1.5	88	18	35.8	24,300	36,400	0.03	1.75
R50-10T4-SE-F[1)]	50	10	80	M75 × 1.5	100	20	45.8	52,800	106,800	0.02	2.96
R50-20T3-SE-B	50	20	80	M75 × 1.5	114	20	45.8	40,000	76,200	0.03	3.15
R63-10T6-SE-F[2)]	63	10	95	M85 × 2.0	120	20	58.8	84,700	210,800	0.04	4.37
R63-20T3-SE-S	63	20	95	M85 × 2.0	138	20	55.4	96,000	189,000	0.04	4.40

[1)] Left-hand nut available short-term
[2)] Left-hand nut available upon request

All dimensions stated without a unit are in mm

- Reduced axial play on request
- Nuts with dirt wipers

Order example:

R	20	05	T4	SE	F	600	680	0.052

5.4.5 Safety nut SEM

The safety nut comprises a ball thread unit and safety unit. The safety nut basically works like a normal ballscrew nut. If the axial play is increased due to wear, ball failure or ball loss, the thread of the safety unit comes into contact with the ball thread. The nut cannot therefore break out. The normal function of the unit is guaranteed up to an axial play of 0.4 mm.

Areas of application:

- Lifting equipment
- Clamping fixtures
- Lifting platforms
- Elevators

1 Ballscrew unit
2 Safety unit

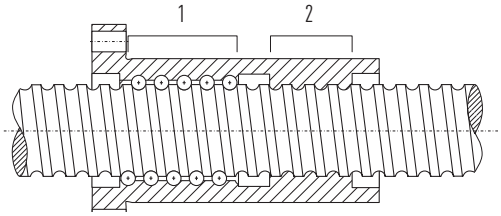

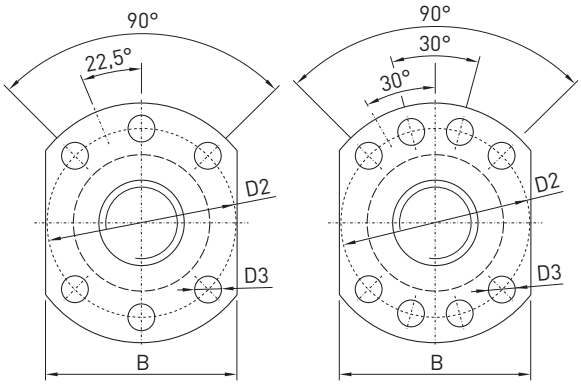

BP 1
ds ≤ 32

BP 2
ds > 32

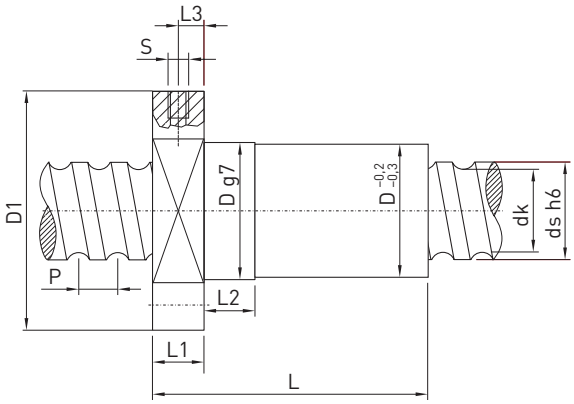

BP Hole pattern

Table 5.8 **Safety nut dimensions**

Type	ds	P	D	D1	D2	D3	L	L1	L2	L3	S	B	dk	Dynamic load rating C_{dyn} [N]	Static load rating C_0 [N]	Max. axial play [mm]	Mass [kg/piece]
R32-10T4-SEM-F	32	10	56	86	70	9.0	130	15	16	7.5	M6	66	27.8	40,900	63,200	0.02	1.55
R40-10T4-SEM-F	40	10	63	93	78	9.0	130	15	16	7.5	M8 × 1	70	35.8	46,800	82,500	0.02	1.69
R40-20T2-SEM-B	40	20	63	93	78	9.0	140	15	16	7.5	M8 × 1	70	35.8	24,300	36,400	0.03	1.82
R50-10T5-SEM-F	50	10	75	110	93	11.0	145	16	16	8.0	M8 × 1	85	45.8	63,900	133,300	0.02	2.40
R63-20T4-SEM-S	63	20	95	135	115	13.5	205	20	25	10.0	M8 × 1	100	55.4	124,000	250,000	0.04	5.90
R80-20T5-SEM-S	80	20	125	165	145	13.5	230	25	25	12.5	M8 × 1	130	72.4	174,500	398,000	0.05	12.10

All dimensions stated without a unit are in mm

Note:
Simply using a safety nut does not provide sufficient protection against a load being lowered unintentionally. The safety guidelines valid for the application must be observed. The safety nut it is not a safety component according to the Machinery Directive.

6. Ground ballscrews

6.1 Properties

Of the various production methods used for ballscrews, ground ballscrews offer the greatest accuracy. Ballscrews with a lead accuracy of up to 3.5 µm/300 mm thread length can be produced by grinding after hardening. They are used mainly in machine tools, grinding machines and measuring machines.
Ground ballscrews are always customized, enabling the customer's requirements relating to nut shape, load ratings, preload method, wiper type and end machining to be met. Contact our team for more details.

Below you will find typical standardized nut shapes, nominal diameters and leads. This is just part of our range. We can provide other nut dimensions on request.

6.2 Tolerance classes

Table 6.1 **Tolerance classes of ground ballscrews**

Path deviation	Tolerance class					
	T0	**T1**	**T2**	**T3**	**T4**	**T5**
e_{2p}	0.003	0.004	0.006	0.008	0.008	0.008
e_{300}	0.0035	0.006	0.008	0.012	0.018	0.023

Unit: mm

Table 6.2 **Overview of available ground ballscrews available**

Outer diameter	6	8	10	12	16	20	25	32	40	50	63	80	100
Accuracy	**Maximum lengths of ballscrew shafts**												
T0	110	170	300	400	600	700	1,000	1,200	1,500	1,800	2,000	2,000	2,000
T1	110	170	400	500	720	950	1,300	1,800	2,300	3,100	4,000	4,000	4,000
T2	140	200	500	630	900	1,300	1,700	2,200	2,900	4,000	5,200	6,300	6,300
T3	170	250	500	630	1,000	1,400	1,800	2,500	3,500	4,500	6,000	10,000	10,000
T4	170	250	500	630	1,000	1,400	1,800	2,500	3,500	4,500	6,000	10,000	10,000
T5	170	250	500	630	1,410	1,700	2,400	3,000	3,800	5,000	6,900	10,000	10,000

Unit: mm

Green fields: Please contact HIWIN

6.3 HIWIN order code for ground ballscrews

In order to clearly identify the ballscrew, information about the ballscrew shaft and nut is needed.

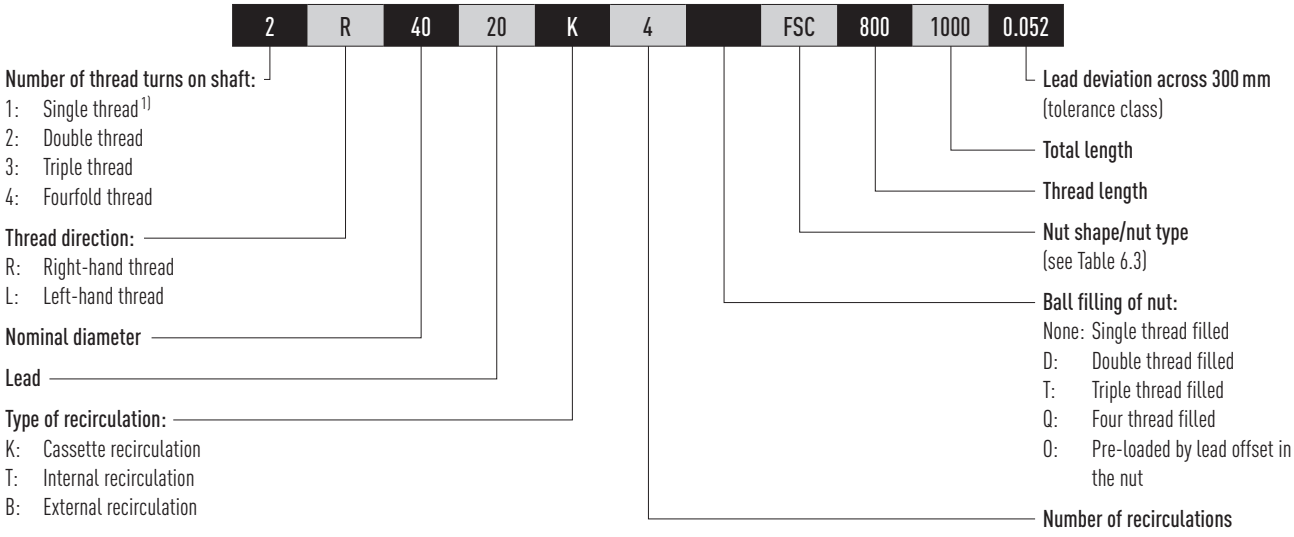

Order code for ballscrew shaft without the nut

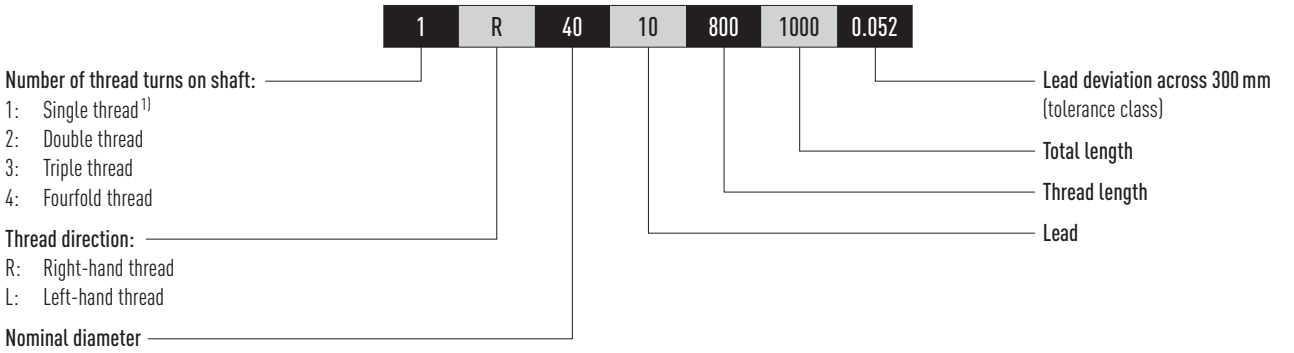

Order code for ballscrew nut without the shaft

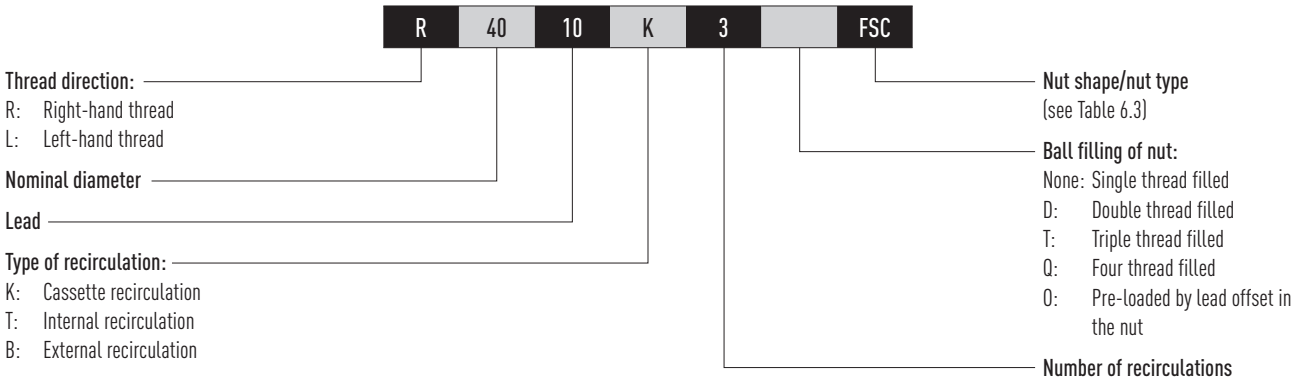

1) Standard; can be omitted with single-thread shafts

Table 6.3 **Overview of nut shapes**

Nut designation	Description
FSC	Flange single nut with cassette recirculation
FDC	Flange double nut with cassette recirculation
FSI	Flange single nut with internal single recirculation
FDI	Flange double nut with internal single recirculation
RSI	Cylindrical single nut with internal single recirculation
RDI	Cylindrical double nut with internal single recirculation

6.4 Nuts for ground ballscrews

6.4.1 DIN single nut FSC (DIN 69051 Part 5) with total recirculation

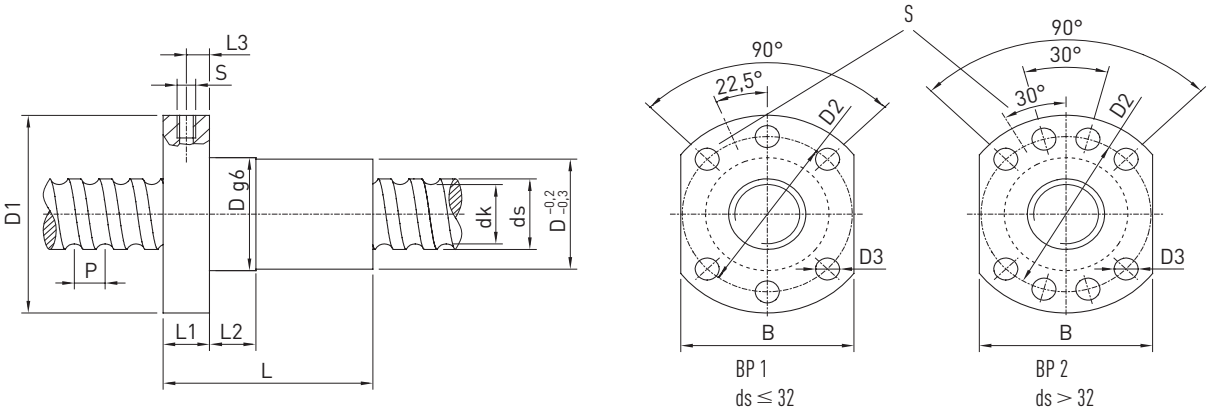

Table 6.4 **Nut dimensions**

Type	ds	P	Ball diameter	D min.	D1	D2	D3	Hole pattern BP	L	L1	L2	L3	Lubrication hole S	B	dk	Rigidity [N/µm]	Dynamic load rating C_{dyn} [N]	Static load rating C_0 [N]
R14-10K3-FSC	14	10	3.175	28	48	38	5.5	1	46	10	10	5	M5	40	10.72	240	11,300	17,900
R15-10K3-FSC	15	10	3.175	34 [1)]	57	45	5.5	1	44	10	10	5	M5	43	12.32	250	11,800	19,300
R15-20K2-FSC	15	20	3.175	34 [1)]	57	45	5.5	1	50	10	10	5	M5	43	12.32	150	7,700	12,560
R16-16K2-FSC	16	16	3.175	34 [1)]	57	45	5.5	1	47	10	10	5	M5	43	13.12	170	8,300	13,850
R20-05K4-FSC	20	5	3.175	36	58	47	6.6	1	40	10	10	5	M6	44	17.32	420	18,300	36,400
R20-10K3-FSC	20	10	3.175	36	58	47	6.6	1	47	10	10	5	M6	44	17.32	320	13,800	26,600
R20-20K2-FSC	20	20	3.175	36	58	47	6.6	1	57	10	10	5	M6	44	17.32	210	9,300	17,300
R25-05K4-FSC	25	5	3.175	40	62	51	6.6	1	43	10	10	5	M6	48	22.32	490	20,200	46,120
R25-10K3-FSC	25	10	3.175	40	62	51	6.6	1	50	10	10	5	M6	48	22.32	380	15,400	33,700
R25-10K4-FSC	25	10	3.969	45 [1)]	65	54	6.6	1	60	10	10	5	M6	51	21.74	560	27,100	56,600
R25-20K3-FSC	25	20	3.175	40	62	51	6.6	1	80	10	10	5	M6	48	22.32	390	15,400	34,360
R25-25K2-FSC	25	25	3.175	40	62	51	6.6	1	69	10	10	5	M6	48	22.32	250	10,300	21,700
R25-20K3-FSC	25	20	3.969	45 [1)]	65	54	6.6	1	80	10	10	5	M6	51	21.74	430	20,800	42,900
R32-05K4-FSC	32	5	3.175	48	70	59	6.6	1	38	12	10	6	M6	54	29.32	570	22,500	59,600
R32-10K5-FSC	32	10	3.969	50	80	65	9.0	1	73	12	10	6	M6	62	28.74	850	37,700	94,500
R32-10K5-FSC	32	10	4.763	56 [1)]	86	71	9.0	1	79	14	10	7	M6	65	28.13	860	47,200	108,900
R32-10K5-FSC	32	10	6.350	62 [1)]	92	77	9.0	1	77	14	10	7	M6	74	26.91	900	69,100	144,800
R32-20K3-FSC	32	20	3.969	50	80	65	9.0	1	87	12	20	6	M6	62	28.74	520	23,300	54,300
R32-20K4-FSC	32	20	4.763	54 [1)]	86	71	9.0	1	106	14	20	7	M6	65	28.13	720	39,100	89,140
R32-20K4-FSC	32	20	6.350	62 [1)]	92	77	9.0	1	107	14	20	7	M6	74	26.91	700	55,500	108,540

All dimensions stated without a unit are in mm

[1)] Non-standard series of DIN 69051 Part 5 for high leads or of nut diameters deviating from the DIN standard

Table 6.4 **Nut dimensions**

Type	ds	P	Ball diameter	D min.	D1	D2	D3	Hole pattern BP	L	L1	L2	L3	Lubrication hole S	B	dk	Rigidity [N/µm]	Dynamic load rating C_{dyn} [N]	Static load rating C_0 [N]
R32-32K2-FSC	32	32	3.969	50	80	65	9.0	1	87	12	20	6	M6	62	28.74	340	15,700	35,300
R32-40K2-FSC	32	40	3.969	50	80	65	9.0	1	94	12	20	6	M6	62	28.74	320	15,200	34,400
R38-10K4-FSC	38	10	6.350	63	93	78	9.0	2	70	14	20	7	M8 × 1	70	32.91	810	61,900	137,900
R38-20K4-FSC	38	20	6.350	63	93	78	9.0	2	108	14	25	7	M8 × 1	70	32.91	830	61,100	136,600
R38-25K4-FSC	38	25	6.350	63	93	78	9.0	2	127	14	25	7	M8 × 1	70	32.91	830	60,500	135,600
R38-40K2-FSC	38	40	6.350	63	93	78	9.0	2	103	14	25	7	M8 × 1	70	32.91	400	31,700	65,600
R40-05K5-FSC	40	5	3.175	63	93	78	9.0	2	45	14	20	7	M8 × 1	70	37.32	850	30,300	94,900
R40-10K5-FSC	40	10	6.350	70 [1)]	100	85	9.0	2	83	14	20	7	M8 × 1	75	34.91	1,060	77,700	184,000
R40-20K4-FSC	40	20	6.350	70 [1)]	100	85	9.0	2	110	14	20	7	M8 × 1	75	34.91	870	62,700	144,400
R40-40K2-FSC	40	40	6.350	70 [1)]	100	85	9.0	2	101	14	25	7	M8 × 1	75	34.91	420	32,600	69,400
R50-05K5-FSC	50	5	3.175	70	100	85	11.0	2	45	16	20	8	M8 × 1	75	47.32	950	33,100	119,400
R50-10K5-FSC	50	10	6.350	82 [1)]	118	100	11.0	2	80	16	25	8	M8 × 1	92	44.91	1,250	86,400	233,000
R50-20K4-FSC	50	20	6.350	82 [1)]	118	100	11.0	2	106	16	25	8	M8 × 1	92	44.91	1,040	70,100	183,400
R50-20K4-FSC	50	20	9.525	86 [1)]	121	103	11.0	2	120	16	25	8	M8 × 1	95	42.47	1,130	120,900	274,200
R50-40K3-FSC	50	40	6.350	82 [1)]	118	100	11.0	2	145	16	25	8	M8 × 1	92	44.91	790	53,800	137,500
R63-10K5-FSC	63	10	6.350	95	135	115	13.5	2	84	20	25	10	M8 × 1	100	57.91	1,440	94,600	291,900
R63-20K5-FSC	63	20	6.350	95	135	115	13.5	2	132	20	25	10	M8 × 1	100	57.91	1,570	96,200	300,200
R63-20K5-FSC	63	20	9.525	107	147	127	13.5	2	140	20	25	10	M8 × 1	112	55.47	1,680	164,500	435,300
R63-40K2-FSC	63	40	6.350	95	135	115	13.5	2	110	20	25	10	M8 × 1	100	57.91	620	40,500	111,000
R80-10K5-FSC	80	10	6.350	110 [1)]	150	130	13.5	2	80	25	25	12.5	M8 × 1	115	74.91	1,660	105,600	379,800
R80-20K4-FSC	80	20	9.525	120 [1)]	165	145	13.5	2	122	25	25	12.5	M8 × 1	130	72.47	1,600	151,900	449,100

All dimensions stated without a unit are in mm

[1)] Non-standard series of DIN 69051 Part 5 for high leads or of nut diameters deviating from the DIN standard

- The rigidity values stated are determined by calculation without preload for loading of 30 % of the dynamic load rating
- Deviating nut dimensions on request
- Other diameters and leads on request
- Left-handed nuts on request

Order example:

R	40	40	K2	FSC	1200	1295	0.012

6.4.2 DIN double nut FDC (DIN 69051 Part 5) with total recirculation

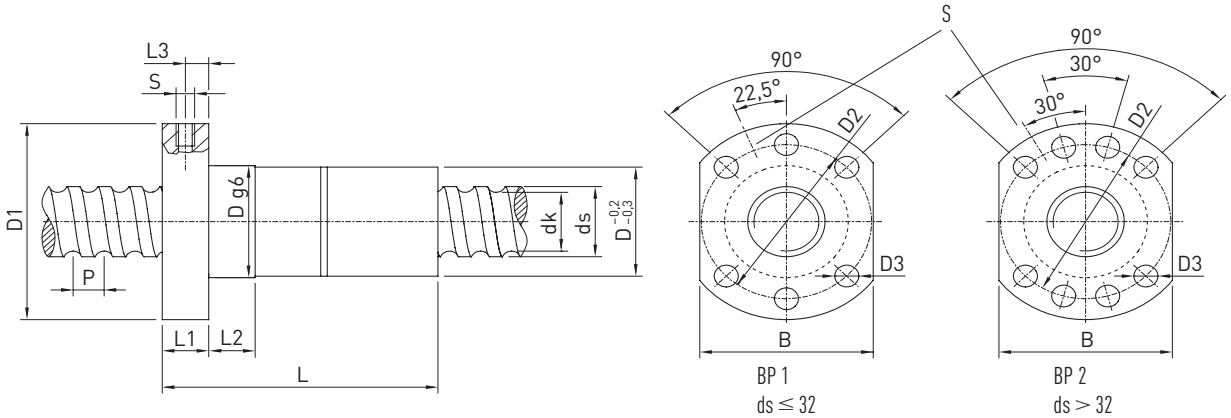

Table 6.5 **Nut dimensions**

Type	ds	P	Ball diameter	D min.	D1	D2	D3	Hole pattern BP	L	L1	L2	L3	Lubrication hole S	B	dk	Rigidity [N/µm]	Dynamic load rating C_{dyn} [N]	Static load rating C_0 [N]
R14-10K3-FDC	14	10	3.175	28	48	38	5.5	1	96	10	10	5	M5	40	10.724	310	11,300	17,900
R15-10K3-FDC	15	10	3.175	34 1)	57	45	5.5	1	92	10	10	5	M5	43	12.324	330	11,800	19,300
R15-20K2-FDC	15	20	3.175	34 1)	57	45	5.5	1	104	10	10	5	M5	43	12.324	200	7,700	12,560
R16-16K2-FDC	16	16	3.175	34 1)	57	45	5.5	1	98	10	10	5	M5	43	13.124	230	8,300	13,850
R20-05K4-FDC	20	5	3.175	36	58	47	6.6	1	84	10	10	5	M6	44	17.324	550	18,300	16,420
R20-10K3-FDC	20	10	3.175	36	58	47	6.6	1	98	10	10	5	M6	44	17.324	420	13,800	26,600
R20-20K2-FDC	20	20	3.175	36	58	47	6.6	1	116	10	10	5	M6	44	17.324	270	9,300	17,300
R25-05K4-FDC	20	5	3.175	40	62	51	6.6	1	90	10	10	5	M6	48	22.324	650	20,200	46,120
R25-10K3-FDC	25	10	3.175	40	62	51	6.6	1	104	10	10	5	M6	48	22.324	500	15,400	33,700
R25-10K4-FDC	25	10	3.969	45 1)	65	54	6.6	1	124	10	10	5	M6	51	21.744	740	27,100	56,600
R25-20K3-FDC	25	20	3.175	40	62	51	6.6	1	164	10	10	5	M6	48	22.324	510	15,400	34,360
R25-20K3-FDC	25	20	3.969	45 1)	65	54	6.6	1	164	10	10	5	M6	51	21.744	550	20,800	42,900
R25-25K2-FDC	25	25	3.175	40	62	51	6.6	1	142	10	10	5	M6	48	22.324	320	10,300	21,700
R32-05K4-FDC	32	5	3.175	48	70	59	6.6	1	80	12	10	6	M6	54	29.324	770	22,500	59,600
R32-10K5-FDC	32	10	3.969	50	80	65	9.0	1	150	12	10	6	M6	62	28.744	1,130	37,700	94,500
R32-10K5-FDC	32	10	4.763	56 1)	86	71	9.0	1	162	14	10	7	M6	65	28.132	1,130	47,200	108,900
R32-10K5-FDC	32	10	6.350	62 1)	92	77	9.0	1	158	14	10	7	M6	74	26.910	1,190	69,100	144,800
R32-20K3-FDC	32	20	3.969	50	80	65	9.0	1	178	12	20	6	M6	62	28.744	680	23,300	54,300
R32-20K4-FDC	32	20	4.763	54 1)	86	71	9.0	1	216	14	20	7	M6	65	28.132	940	39,100	89,140
R32-20K4-FDC	32	20	6.350	62 1)	92	77	9.0	1	218	14	20	7	M6	74	26.910	710	55,500	108,540
R32-32K2-FDC	32	32	3.969	50	80	65	9.0	1	178	12	20	6	M6	62	28.744	440	15,700	35,300
R32-40K2-FDC	32	40	3.969	50	80	65	9.0	1	192	12	20	6	M6	62	28.744	420	15,200	34,400
R38-10K4-FDC	38	10	6.350	63	93	78	9.0	2	144	14	20	7	M8 × 1	70	32.910	1,070	61,900	137,900
R38-20K4-FDC	38	20	6.350	63	93	78	9.0	2	220	14	25	7	M8 × 1	70	32.910	1,100	61,100	136,600
R38-25K4-FDC	38	25	6.350	63	93	78	9.0	2	258	14	25	7	M8 × 1	70	32.910	1,090	60,500	135,600
R38-40K2-FDC	38	40	6.350	63	93	78	9.0	2	210	14	25	7	M8 × 1	70	32.910	530	31,700	65,600
R40-05K5-FDC	40	5	3.175	63	93	78	9.0	2	95	14	20	7	M8 × 1	70	37.324	1,140	30,300	94,900
R40-10K5-FDC	40	10	6.350	70 1)	100	85	9.0	2	171	14	20	7	M8 × 1	75	34.910	1,410	77,700	184,000
R40-20K4-FDC	40	20	6.350	70 1)	100	85	9.0	2	225	14	20	7	M8 × 1	75	34.910	1,150	62,700	144,400
R40-40K2-FDC	40	40	6.350	70 1)	100	85	9.0	2	207	14	25	7	M8 × 1	75	34.910	560	32,600	69,400
R50-05K5-FDC	50	5	3.175	70	100	85	11.0	2	95	16	20	8	M8 × 1	75	47.324	1,290	33,100	119,400
R50-10K5-FDC	50	10	6.350	82 1)	118	100	11.0	2	166	16	25	8	M8 × 1	92	44.910	1,660	86,400	233,000

All dimensions stated without a unit are in mm

1) Non-standard series of DIN 69051 Part 5 for high leads or of nut diameters deviating from the DIN standard

Table 6.5 **Nut dimensions**

Type	ds	P	Ball diameter	D min.	D1	D2	D3	Hole pattern BP	L	L1	L2	L3	Lubrication hole S	B	dk	Rigidity [N/µm]	Dynamic load rating C_{dyn} [N]	Static load rating C_0 [N]
R50-20K4-FDC	50	20	6.350	82 [1]	118	100	11.0	2	218	16	25	8.0	M8 × 1	92	44.910	1,380	70,100	183,400
R50-20K4-FDC	50	20	9.525	86 [1]	121	103	11.0	2	245	16	25	8.0	M8 × 1	95	42.466	1,490	120,900	274,200
R50-40K3-FDC	50	40	6.350	82 [1]	118	100	11.0	2	295	16	25	8.0	M8 × 1	92	44.910	1,040	53,800	137,500
R63-10K5-FDC	63	10	6.350	95	135	115	13.5	2	174	20	25	10.0	M8 × 1	100	57.910	1,920	94,600	291,900
R63-20K5-FDC	63	20	6.350	95	135	115	13.5	2	270	20	25	10.0	M8 × 1	100	57.910	2,080	96,200	300,200
R63-20K5-FDC	63	20	9.525	107	147	127	13.5	2	286	20	25	10.0	M8 × 1	112	55.466	2,220	164,500	435,300
R63-40K2-FDC	63	40	6.350	95	135	115	13.5	2	226	20	25	10.0	M8 × 1	100	57.910	820	40,500	111,000
R80-10K5-FDC	80	10	6.350	110 [1]	150	130	13.5	2	170	25	25	12.5	M8 × 1	115	74.910	2,230	105,600	379,800
R80-20K4-FDC	80	20	9.525	120 [1]	165	145	13.5	2	250	25	25	12.5	M8 × 1	130	72.466	2,120	151,900	449,100

All dimensions stated without a unit are in mm

[1] Non-standard series of DIN 69051 Part 5 for high leads or of nut diameters deviating from the DIN standard

- The rigidity values stated are determined by calculation for a preload of 10 % of the dynamic load rating
- Deviating nut dimensions on request
- Other diameters and leads on request
- Left-handed nuts on request

Order example:

R	40	40	K2	FDC	1200	1295	0.012

6.4.3 Flange single nut FSI with single recirculation

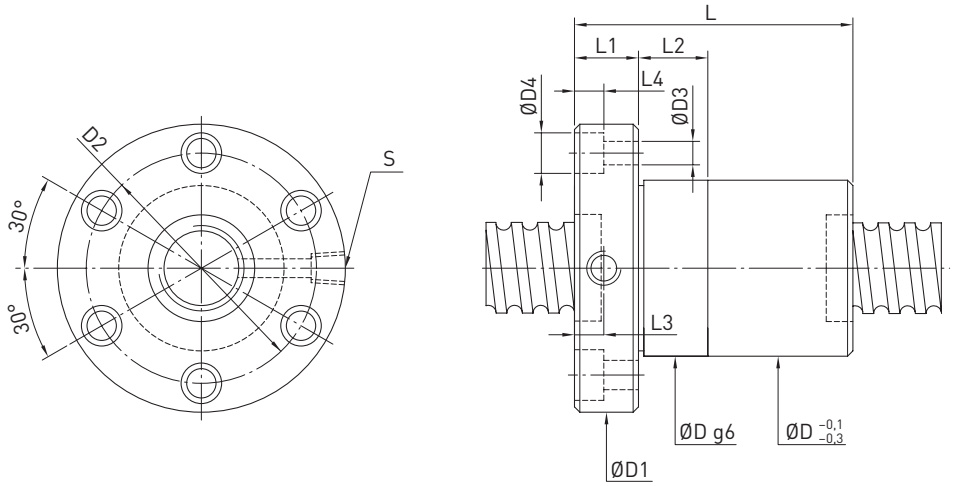

Table 6.6 **Nut dimensions**

Type	ds	P	Ball diameter	D min.	D1	D2	D3	D4	L	L1	L2	L3	L4	Lubrication hole S	dk	Rigidity [N/µm]	Dynamic load rating C_{dyn} [N]	Static load rating C_0 [N]	Mass [kg]
R8-2.5T3-FSI	8	2.5	1.500	18	35	27	4.5	–	28	5	–	–	–	–	6.65	80	1,700	2,670	0.04
R16-2T3-FSI	16	2.0	1.500	27	44	34	4.5	8.0	36	10	–	5.0	4.5	M6	14.65	140	2,520	5,930	0.17
R16-5T3-FSI	16	5.0	3.175	30	54	41	5.5	9.5	46	12	12	6.0	5.5	M6	13.32	110	7,310	13,310	0.32
R16-5T4-FSI	16	5.0	3.175	30	54	41	5.5	9.5	52	12	12	6.0	5.5	M6	13.32	120	9,360	17,750	0.34
R20-2T4-FSI	20	2.0	1.500	32	52	40	5.5	9.5	40	10	12	5.0	5.5	M6	18.65	360	3,990	11,120	0.25
R20-2T6-FSI	20	2.0	1.500	32	52	40	5.5	9.5	52	10	12	5.0	5.5	M6	18.65	320	5,180	15,510	0.29
R20-5T3-FSI	20	5.0	3.175	34	57	45	5.5	9.5	46	12	12	6.0	5.5	M6	17.32	200	8,520	17,670	0.35
R20-5T4-FSI	20	5.0	3.175	34	57	45	5.5	9.5	53	12	12	6.0	5.5	M6	17.32	270	10,910	23,560	0.38
R25-2T3-FSI	25	2.0	1.500	36	58	46	5.5	9.5	35	10	12	5.0	5.5	M6	23.65	200	3,090	9,800	0.24
R25-2T4-FSI	25	2.0	1.500	36	58	46	5.5	9.5	40	10	12	5.0	5.5	M6	23.65	270	3,950	13,070	0.26
R25-2T6-FSI	25	2.0	1.500	36	58	46	5.5	9.5	50	10	12	5.0	5.5	M6	23.65	390	5,600	19,600	0.30
R25-5T3-FSI	25	5.0	3.175	40	64	51	5.5	9.5	46	11	10	5.5	5.5	M6	22.32	280	9,770	23,140	0.42
R25-5T4-FSI	25	5.0	3.175	40	64	51	5.5	9.5	51	11	10	5.5	5.5	M6	22.32	370	12,520	30,850	0.44
R25-5T5-FSI	25	5.0	3.175	40	63	51	5.5	9.5	56	11	10	5.5	5.5	M6	22.32	400	15,160	38,560	0.47
R25-5T6-FSI	25	5.0	3.175	40	63	51	5.5	9.5	65	11	10	5.5	5.5	M6	22.32	480	17,730	46,270	0.52
R25-10T3-FSI	25	10.0	4.763	45	69	55	6.6	11.0	65	15	12	7.5	6.5	M6	21.13	250	15,910	32,360	0.80
R25-10T4-FSI	25	10.0	4.763	45	69	55	6.6	11.0	80	15	12	7.5	6.5	M6	21.13	330	20,380	43,150	0.90
R32-5T3-FSI	32	5.0	3.175	44	74	60	6.6	11.0	46	12	12	6.0	6.5	M6	29.32	330	11,170	30,810	0.49
R32-5T4-FSI	32	5.0	3.175	44	74	60	6.6	11.0	53	12	12	6.0	6.5	M6	29.32	420	14,310	41,080	0.53
R32-5T6-FSI	32	5.0	3.175	44	74	60	6.6	11.0	66	12	12	6.0	6.5	M6	29.32	630	20,270	61,620	0.59
R32-10T3-FSI	32	10.0	6.350	51	82	68	6.6	11.0	72	16	12	8.0	6.5	M6	26.91	350	25,390	53,270	1.02
R32-10T4-FSI	32	10.0	6.350	51	82	68	6.6	11.0	83	16	12	8.0	6.5	M6	26.91	480	32,520	71,020	1.11
R40-5T4-FSI	40	5.0	3.175	51	80	66	6.6	11.0	53	16	12	8.0	6.5	M8 × 1	37.32	500	15,990	52,800	0.66
R40-5T6-FSI	40	5.0	3.175	51	80	66	6.6	11.0	66	16	12	8.0	6.5	M8 × 1	37.32	740	22,650	79,190	0.73
R40-10T3-FSI	40	10.0	6.350	60	96	80	9.0	14.0	76	16	15	8.0	8.5	M8 × 1	34.91	400	29,590	70,690	1.37
R40-10T4-FSI	40	10.0	6.350	60	96	80	9.0	14.0	87	16	15	8.0	8.5	M8 × 1	34.91	510	37,890	94,260	1.49
R50-5T4-FSI	50	5.0	3.175	62	96	80	9.0	14.0	57	16	15	8.0	8.5	M8 × 1	47.32	620	17,570	67,450	0.95
R50-5T6-FSI	50	5.0	3.175	62	96	80	9.0	14.0	70	16	15	8.0	8.5	M8 × 1	47.32	910	24,900	101,170	1.04
R50-10T3-FSI	50	10.0	6.350	69	114	92	11.0	17.5	78	18	20	9.0	11.0	M8 × 1	44.91	500	33,970	92,560	1.85
R50-10T4-FSI	50	10.0	6.350	69	114	92	11.0	17.5	89	18	20	9.0	11.0	M8 × 1	44.91	630	43,500	123,410	1.98
R50-10T6-FSI	50	10.0	6.350	69	114	92	11.0	17.5	112	18	20	9.0	11.0	M8 × 1	44.91	940	61,650	185,110	2.26

All dimensions stated without a unit are in mm

Table 6.6 **Nut dimensions**

Type	ds	P	Ball diameter	D min.	D1	D2	D3	D4	L	L1	L2	L3	L4	Lubrication hole S	dk	Rigidity [N/µm]	Dynamic load rating C_{dyn} [N]	Static load rating C_0 [N]	Mass [kg]
R50-20T4-FSI	50	20	9.525	75	129	105	14.0	20.0	186	28	30	14.0	13.0	M8 × 1	42.47	800	93,270	239,550	5.30
R63-10T4-FSI	63	10	6.350	82	134	110	14.0	20.0	91	20	20	10.0	13.0	M8 × 1	57.91	790	48,600	158,580	2.54
R63-10T6-FSI	63	10	6.350	82	134	110	14.0	20.0	114	20	20	10.0	13.0	M8 × 1	57.91	1,150	68,870	237,860	2.88
R80-10T4-FSI	80	10	6.350	99	152	127	14.0	20.0	91	20	20	10.0	13.0	M8 × 1	74.91	960	55,590	211,180	3.00
R80-10T6-FSI	80	10	6.350	99	152	127	14.0	20.0	114	20	20	10.0	13.0	M8 × 1	74.91	1,400	78,790	316,770	3.42
R80-20T3-FSI	80	20	9.525	108	174	143	18.0	26.0	138	24	25	12.0	17.5	M8 × 1	72.47	950	96,630	316,220	6.30
R80-20T4-FSI	80	20	9.525	108	174	143	18.0	26.0	161	24	25	12.0	17.5	M8 × 1	72.47	1,250	123,750	421,620	6.96
R100-20T4-FSI	100	20	9.525	135	194	163	18.0	26.0	161	24	30	12.0	17.5	M8 × 1	92.47	1,550	135,690	531,610	8.60

All dimensions stated without a unit are in mm

- The rigidity values stated are determined by calculation without preload for loading of 30 % of the dynamic load rating
- Deviating nut dimensions on request
- Other diameters and leads on request

Order example:

R	50	10	T4	FSI	2250	2325	0.023

6.4.4 Flange double nut FDI with single recirculation

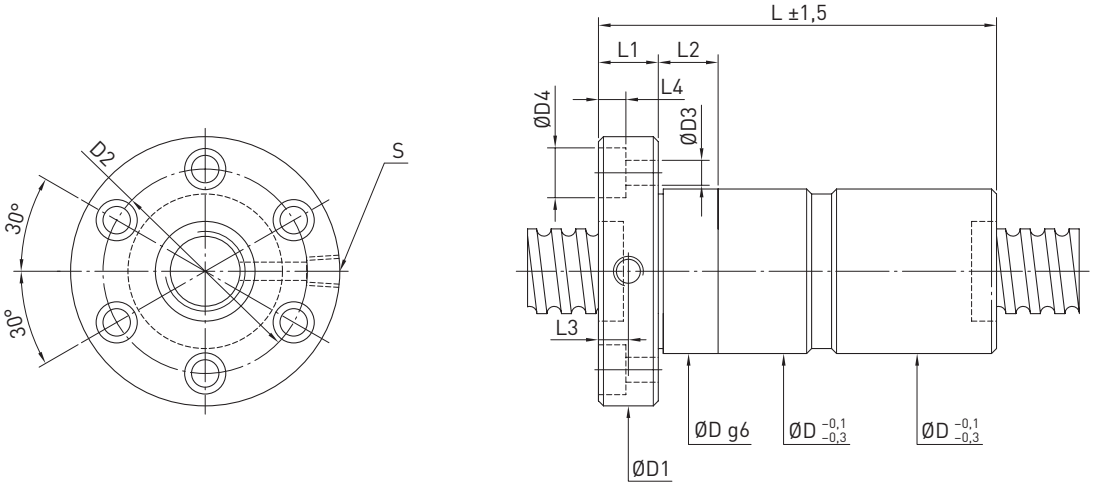

Table 6.7 **Nut dimensions**

Type	ds	P	Ball diameter	D min.	D1	D2	D3	D4	L	L1	L2	L3	L4	Lubrication hole S	dk	Rigidity [N/µm]	Dynamic load rating C_{dyn} [N]	Static load rating C_0 [N]	Mass [kg]
R16-5T3-FDI	16	5	3.175	30	54	41	5.5	9.5	78	12	24	6.0	5.5	M6	13.32	200	7,310	13,310	0.43
R16-5T4-FDI	16	5	3.175	30	54	41	5.5	9.5	90	12	24	6.0	5.5	M6	13.32	230	9,360	17,750	0.48
R20-5T3-FDI	20	5	3.175	34	57	45	5.5	9.5	78	12	24	6.0	5.5	M6	17.32	390	8,520	17,670	0.49
R20-5T4-FDI	20	5	3.175	34	57	45	5.5	9.5	92	12	24	6.0	5.5	M6	17.32	540	10,910	23,560	0.55
R25-5T3-FDI	25	5	3.175	40	64	52	5.5	9.5	78	12	24	5.5	5.5	M6	22.32	550	9,770	23,140	0.59
R25-5T4-FDI	25	5	3.175	40	64	52	5.5	9.5	96	12	24	5.5	5.5	M6	22.32	730	12,520	30,850	0.69
R25-10T3-FDI	25	10	4.763	51	74	60	6.6	11.0	140	15	24	7.5	6.5	M6	21.13	490	16,430	32,650	1.38
R32-5T3-FDI	32	5	3.175	44	74	60	6.6	11.0	78	12	24	6.0	6.5	M6	29.32	640	11,170	30,810	0.65
R32-5T4-FDI	32	5	3.175	44	74	60	6.6	11.0	96	12	24	6.0	6.5	M6	29.32	820	14,310	41,080	0.74
R32-5T6-FDI	32	5	3.175	44	74	60	6.6	11.0	118	12	24	6.0	6.5	M6	29.32	1,210	20,270	61,620	0.85
R32-10T3-FDI	32	10	6.350	51	82	68	6.6	11.0	129	16	24	8.0	6.5	M6	26.91	680	25,390	53,270	1.50
R32-10T4-FDI	32	10	6.350	51	82	68	6.6	11.0	155	16	24	8.0	6.5	M6	26.91	820	32,520	71,020	1.72
R40-5T4-FDI	40	5	3.175	51	80	66	6.6	11.0	96	16	24	8.0	6.5	M8 × 1	37.32	990	15,990	52,800	0.89
R40-5T6-FDI	40	5	3.175	51	80	66	6.6	11.0	122	16	24	8.0	6.5	M8 × 1	37.32	1,460	22,650	79,190	1.03
R40-10T3-FDI	40	10	6.350	60	96	80	9.0	14.0	133	16	30	8.0	8.5	M8 × 1	34.91	760	29,590	70,690	1.99
R40-10T4-FDI	40	10	6.350	60	96	80	9.0	14.0	155	16	30	8.0	8.5	M8 × 1	34.91	1,010	37,890	94,260	2.22
R50-5T4-FDI	50	5	3.175	62	96	80	9.0	14.0	96	16	30	8.0	8.5	M8 × 1	47.32	1,210	17,570	67,450	1.23
R50-5T6-FDI	50	5	3.175	62	96	80	9.0	14.0	122	16	30	8.0	8.5	M8 × 1	47.32	1,770	24,900	101,170	1.42
R50-10T3-FDI	50	10	6.350	69	114	92	11.0	17.5	135	18	40	9.0	11.0	M8 × 1	44.91	950	33,970	92,560	2.53
R50-10T4-FDI	50	10	6.350	69	114	92	11.0	17.5	157	18	40	9.0	11.0	M8 × 1	44.91	1,240	43,500	123,410	2.80
R50-10T6-FDI	50	10	6.350	69	114	92	11.0	17.5	203	18	40	9.0	11.0	M8 × 1	44.91	1,840	61,650	185,110	3.35
R63-10T4-FDI	63	10	6.350	82	134	110	14.0	20.0	159	20	40	10.0	13.0	M8 × 1	57.91	1,580	48,600	158,580	3.53
R63-10T6-FDI	63	10	6.350	82	134	110	14.0	20.0	205	20	40	10.0	13.0	M8 × 1	57.91	2,280	68,870	237,860	4.20
R80-10T4-FDI	80	10	6.350	99	152	127	14.0	20.0	172	20	40	10.0	13.0	M8 × 1	74.91	1,900	55,590	211,180	4.45
R80-10T6-FDI	80	10	6.350	99	152	127	14.0	20.0	214	20	40	10.0	13.0	M8 × 1	74.91	2,770	78,790	316,770	5.20
R80-20T3-FDI	80	20	9.525	108	174	143	18.0	26.0	250	24	50	12.0	17.5	M8 × 1	72.47	1,890	96,630	316,220	9.54
R80-20T4-FDI	80	20	9.525	108	174	143	18.0	26.0	296	24	50	12.0	17.5	M8 × 1	72.47	2,480	123,750	421,620	10.87
R100-20T4-FDI	100	20	9.525	135	194	163	18.0	26.0	296	24	60	12.0	17.5	M8 × 1	92.47	3,000	135,690	531,610	12.69

All dimensions stated without a unit are in mm

- The rigidity values stated are determined by calculation for a preload of 10 % of the dynamic load rating
- Deviating nut dimensions on request
- Other diameters and leads on request

Order example:

R	50	10	T4	FDI	2250	2325	0.023

6.4.5 Cylindrical single nut RSI with single recirculation

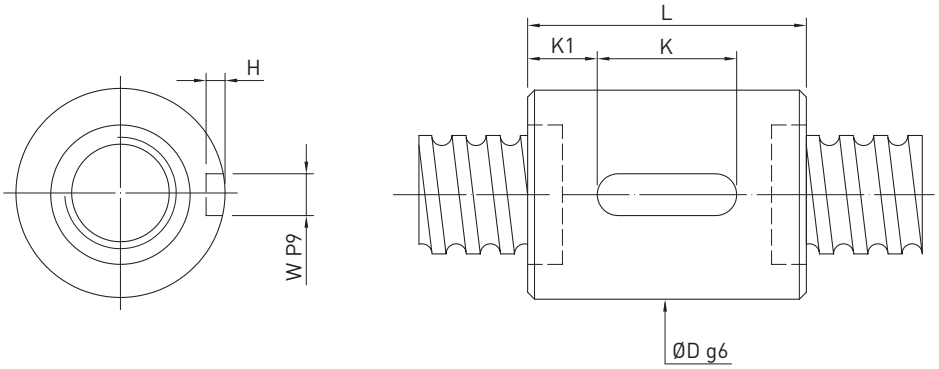

Table 6.8 **Nut dimensions**

Type	Size		Ball diameter	Circuits	Rigidity K [N/µm]	Dynamic load rating C_{dyn} [N]	Static load rating C_0 [N]	Nut		Feather key groove			
	Nominal Ø	**Lead**						**D**	**L**	**K**	**W**	**H**	**K1**
R16-2T4-RSI	16	2	1.500	4	150	1,780	3,950	25	25	20	3	1.8	2.5
R16-5T3-RSI	16	5	3.175	3	110	7,310	13,310	28	40	20	3	1.8	10.0
R16-5T4-RSI	16	5	3.175	4	120	9,360	17,750	28	46	20	3	1.8	13.0
R20-5T3-RSI	20	5	3.175	3	200	8,520	17,670	32	41	20	3	1.8	10.5
R20-5T4-RSI	20	5	3.175	4	270	10,910	23,560	32	48	20	3	1.8	14.0
R25-5T3-RSI	25	5	3.175	3	280	9,770	23,140	37	41	20	4	2.5	10.5
R25-5T4-RSI	25	5	3.175	4	370	12,520	30,850	37	48	20	4	2.5	14.0
R32-5T3-RSI	32	5	3.175	3	330	11,170	30,810	44	41	20	4	2.5	10.5
R32-5T4-RSI	32	5	3.175	4	420	14,310	41,080	44	48	20	4	2.5	14.0
R32-5T6-RSI	32	5	3.175	6	630	20,270	61,620	44	61	25	4	2.5	18.0
R32-10T3-RSI	32	10	6.350	3	350	25,390	53,270	51	68	25	6	3.5	21.5
R32-10T4-RSI	32	10	6.350	4	480	32,520	71,020	51	79	32	6	3.5	23.5
R40-5T4-RSI	40	5	3.175	4	500	15,990	52,800	51	48	20	4	2.5	14.0
R40-5T6-RSI	40	5	3.175	6	740	22,650	79,190	51	61	25	4	2.5	18.0
R40-10T3-RSI	40	10	6.350	3	400	29,590	70,690	60	68	25	6	3.5	21.5
R40-10T4-RSI	40	10	6.350	4	510	37,890	94,260	60	79	32	6	3.5	23.5
R50-5T4-RSI	50	5	3.175	4	620	17,570	67,450	62	48	20	4	2.5	14.0
R50-5T6-RSI	50	5	3.175	6	910	24,900	101,170	62	61	25	4	2.5	18.0
R50-10T3-RSI	50	10	6.350	3	500	33,970	92,560	69	68	32	6	3.5	18.0
R50-10T4-RSI	50	10	6.350	4	630	43,500	123,410	69	79	32	6	3.5	23.5
R50-10T6-RSI	50	10	6.350	6	940	61,650	185,110	69	102	40	6	3.5	31.0
R63-6T4-RSI	63	6	3.969	4	750	26,740	105,420	78	56	25	6	3.5	15.5
R63-6T6-RSI	63	6	3.969	6	1,130	37,040	158,130	78	70	32	6	3.5	19.0
R80-10T4-RSI	80	10	6.350	4	960	55,590	211,180	99	79	32	8	4.0	23.5
R80-10T6-RSI	80	10	6.350	6	1,400	78,790	316,770	99	102	40	8	4.0	31.0
R80-20T3-RSI	80	20	9.525	3	950	96,630	316,220	108	126	50	10	5.0	38.0
R80-20T4-RSI	80	20	9.525	4	1,250	123,750	421,620	108	149	63	10	5.0	43.0
R100-20T4-RSI	100	20	9.525	4	1,550	135,690	531,610	125	149	63	10	5.0	43.0

All dimensions stated without a unit are in mm

- The rigidity values stated are determined by calculation without preload for loading of 30 % of the dynamic load rating
- Deviating nut dimensions on request
- Other diameters and leads on request

Order example:

R	32	10	T4	RSI	1500	1615	0.012

6.4.6 Cylindrical double nut RDI with single recirculation

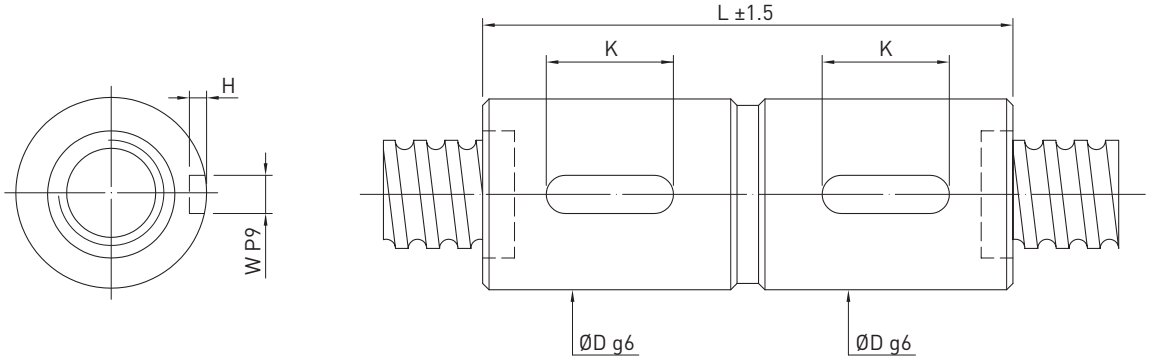

Table 6.9 **Nut dimensions**

Type	Size		Ball diameter	Circuits	Rigidity K [N/µm]	Dynamic load rating C_{dyn} [N]	Static load rating C_0 [N]	Nut		Feather key groove		
	Nominal Ø	Lead						D	L	K	W	H
R16-5T3-RDI	16	5	3.175	3	200	7,310	13,310	28	72	20	3	1.8
R16-5T4-RDI	16	5	3.175	4	230	9,360	17,750	28	85	20	3	1.8
R20-5T3-RDI	20	5	3.175	3	390	8,520	17,670	32	75	20	3	1.8
R20-5T4-RDI	20	5	3.175	4	540	10,910	23,560	32	85	20	3	1.8
R25-5T3-RDI	25	5	3.175	3	550	9,770	23,140	37	75	20	4	2.5
R25-5T4-RDI	25	5	3.175	4	730	12,520	30,850	37	85	20	4	2.5
R32-5T3-RDI	32	5	3.175	3	640	11,170	30,810	44	75	20	4	2.5
R32-5T4-RDI	32	5	3.175	4	820	14,310	41,080	44	85	20	4	2.5
R32-5T6-RDI	32	5	3.175	6	1,210	20,270	61,620	44	105	25	4	2.5
R32-10T3-RDI	32	10	6.350	3	680	25,390	53,270	51	135	25	6	3.5
R32-10T4-RDI	32	10	6.350	4	820	32,520	71,020	51	155	32	6	3.5
R40-5T4-RDI	40	5	3.175	4	990	15,990	52,800	51	85	20	4	2.5
R40-5T6-RDI	40	5	3.175	6	1,460	22,650	79,190	51	105	25	4	2.5
R40-10T3-RDI	40	10	6.350	3	760	29,590	70,690	60	135	25	6	3.5
R40-10T4-RDI	40	10	6.350	4	1,010	37,890	94,260	60	155	32	6	3.5
R50-5T4-RDI	50	5	3.175	4	1,210	17,570	67,450	62	85	20	4	2.5
R50-5T6-RDI	50	5	3.175	6	1,770	24,900	101,170	62	105	25	4	2.5
R50-10T3-RDI	50	10	6.350	3	950	33,970	92,560	69	135	32	6	3.5
R50-10T4-RDI	50	10	6.350	4	1,240	43,500	123,410	69	155	32	6	3.5
R50-10T6-RDI	50	10	6.350	6	1,840	61,650	185,110	69	197	40	6	3.5
R63-10T4-RDI	63	10	6.350	4	1,580	48,600	158,580	82	160	32	8	4.0
R63-10T6-RDI	63	10	6.350	6	2,280	68,870	237,860	82	202	40	8	4.0
R63-20T4-RDI	63	20	9.525	4	1,890	106,570	312,510	90	260	50	8	4.0
R80-10T4-RDI	80	10	6.350	4	1,900	55,590	211,180	99	160	32	8	4.0
R80-10T6-RDI	80	10	6.350	6	2,770	78,790	316,770	99	202	40	8	4.0
R80-20T3-RDI	80	20	9.525	3	1,890	96,630	316,220	108	245	50	10	5.0
R80-20T4-RDI	80	20	9.525	4	2,480	123,750	421,620	108	289	63	10	5.0
R100-20T4-RDI	100	20	9.525	4	3,000	135,690	531,610	125	289	63	10	5.0

All dimensions stated without a unit are in mm

- The rigidity values stated are determined by calculation for a preload of 10 % of the dynamic load rating
- Deviating nut dimensions on request
- Other diameters and leads on request

Order example:

R	32	10	T4	RDI	1500	1615	0.012

7. Ballscrews for special requirements

7.1 Driven nut unit AME

- Nuts are arranged with axial angular contact ball bearings ZKLF...ZF (less stringent PE version)
- Bearing is preloaded by HIR lock nut

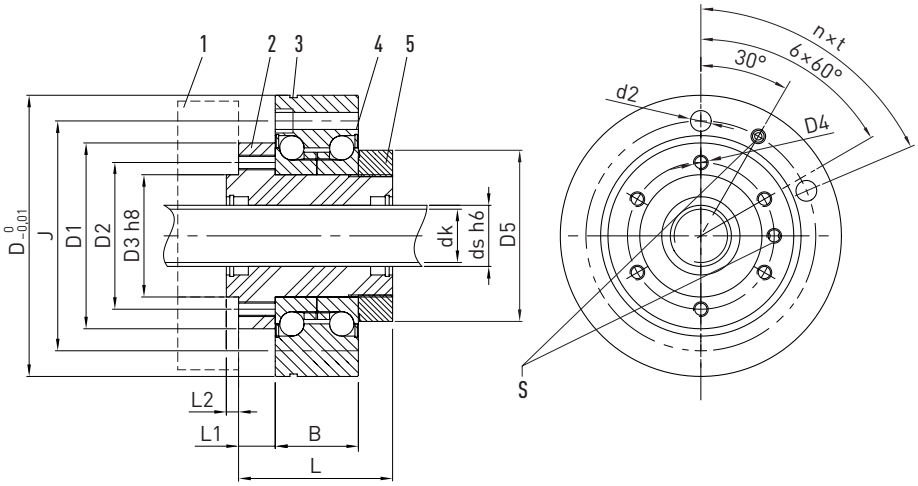

(1) Toothed belt wheel, (2) Nut, (3) Extraction slot, (4) ZKLF bearing, (5) Lock nut
S Lubrication hole

Table 7.1 **Nut dimensions**

Type	Shaft dimensions			Nut dimensions									Bearing dimensions					Dynamic load rating C_{dyn} [N]	Static load rating C_0 [N]	n max. [rpm]
	ds	P	dk	D1	D2	D3	D4	D5	L	L1	L2	M	D	J	n × t	d2	B			
R16-05T3-AME	16	5	13.5	50	40	30	M6	47	50	10	3	M6	80	63	6 × (60°)	Ø 8.5	28	9,600	12,700	4,000
R20-05T4-AME	20	5	17.5	63	52	40	M6	60	60	12	5	M6	100	80	4 × (90°)	Ø 8.5	34	13,900	21,800	3,300
R25-05T4-AME	25	5	22.5	76	60	50	M6	72	63	15	5	M6	115	94	6 × (60°)	Ø 8.5	34	15,600	27,900	3,000
R25-10T3-AME	25	10	21.0	76	60	50	M6	72	74	15	5	M6	115	94	6 × (60°)	Ø 8.5	34	24,100	36,200	3,000
R32-05T5-AME	32	5	29.5	76	62	50	M8	72	70	15	5	M6	115	94	6 × (60°)	Ø 8.5	34	20,700	43,900	3,000
R32-10T4-AME	32	10	27.8	76	62	50	M8	72	105	15	5	M6	115	94	6 × (60°)	Ø 8.5	34	40,900	63,200	3,000
R32-20T2-AME	32	20	27.8	76	62	50	M8	72	100	15	5	M6	115	94	6 × (60°)	Ø 8.5	34	20,800	26,800	3,000
R40-05T5-AME	40	5	37.5	90	70	60	M8	82	76	15	5	M6	145	120	8 × (45°)	Ø 15 × 8U Ø 8.5	45	22,500	54,600	2,400
R40-10T3-AME	40	10	35.8	90	70	60	M8	82	85	15	5	M6	145	120	8 × (45°)	Ø 15 × 8U Ø 8.5	45	37,100	61,900	2,400
R40-20T2-AME	40	20	35.8	90	70	60	M8	82	105	15	5	M6	145	120	8 × (45°)	Ø 15 × 8U Ø 8.5	45	23,800	36,400	2,400
R50-05T5-AME	50	5	47.5	100	84	70	M10	94	78	15	5	M6	155	130	8 × (45°)	Ø 15 × 8U Ø 8.5	45	24,900	69,800	2,200
R50-10T4-AME	50	10	45.8	100	84	70	M10	94	95	15	5	M6	155	130	8 × (45°)	Ø 15 × 8U Ø 8.5	45	52,800	106,800	2,200
R50-20T3-AME	50	20	45.8	100	84	70	M10	94	120	15	5	M6	155	130	8 × (45°)	Ø 15 × 8U Ø 8.5	45	40,000	76,200	2,200
R63-10T6-AME	63	10	58.8	130	110	90	M10	122	120	20	7	M8 × 1	190	165	8 × (45°)	Ø 18 × 10U Ø 10.5	55	84,700	210,800	1,800

All dimensions stated without a unit are in mm

Order example:	R	40	20	T2	AME	3800	3900	0.052

7.2 Ballscrews for heavy-duty operation

7.2.1 Areas of application

Ballscrews for heavy-duty operation are used in applications such as in injection moulding machines, die casting machines, presses, driving mechanisms and robots.

7.2.2 Performance features

Can withstand high loads

- Load capacities 2–3 times greater than standard versions
- High load rating for axial loads, good acceleration
- Short travel distance thanks to special design for lubrication

Accuracy

- T5 and T7

High rapid motion speeds and long service life

- Reinforced ball recirculation systems for use at high speeds and with long service lives

Maximum length: 2 m

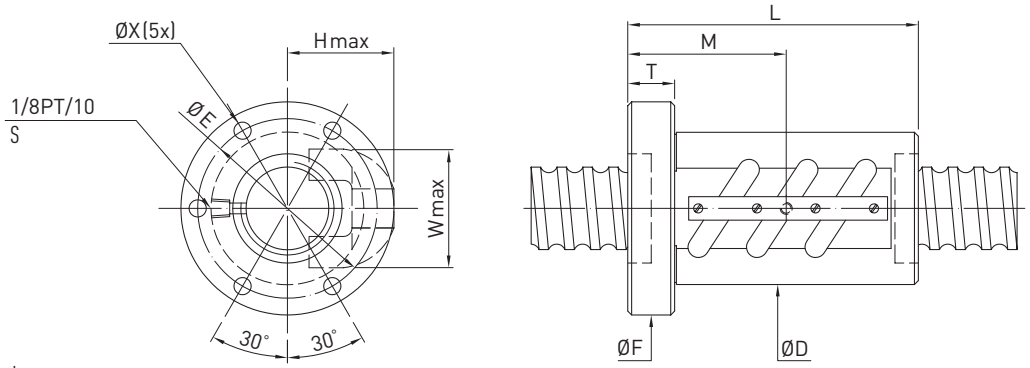

S Lubrication hole

Table 7.2 **Nut dimensions**

Type	Nominal diameter	Lead	Circuits	Dynamic load rating C_{dyn} [kN]	Static load rating C_0 [kN]	D	L	F	T	E	X	H	W
R45-10B3-FSV	45	10	2.5 × 3	145	488	70	143	104	18	87	9	47.0	57
R50-12B3-FSV	50	12	2.5 × 3	175	602	77	171	111	22	94	9	52.0	62
R50-16B3-FSV	50	16	2.5 × 3	330	971	95	223	129	28	112	9	68.0	66
R55-16B3-FSV	55	16	2.5 × 3	343	1,054	99	223	133	28	116	9	70.0	70
R63-16B3-FSV	63	16	2.5 × 3	368	1,217	105	223	139	28	122	9	72.5	82
R80-16B3-FSV	80	16	2.5 × 3	409	1,543	120	227	154	32	137	9	80.0	98
R80-25B3-FSV	80	25	2.5 × 3	714	2,366	145	338	185	40	165	11	102.0	100
R100-16B3-FSV	100	16	2.5 × 3	453	1,949	145	227	185	32	165	11	91.0	117
R100-25B3-FSV	100	25	2.5 × 3	788	2,920	159	338	199	40	179	11	108.5	118
R120-25B3-FSV	120	25	2.5 × 3	850	3,473	173	338	213	40	193	11	116.0	135

All dimensions stated without a unit are in mm

Order example:	R	80	25	B3	FSV	1180	1530	0.023

8. Shaft ends and accessories

8.1 Shaft ends and bearing configuration

To reduce the amount of design work required, we provide standardised end machining processes and bearing units. We recommend the "B", "E" and "F" bearing series for simple transport applications and low axial forces. The SFA and SLA bearing units are suited to more challenging precision applications. The WBK series is available for heavy-duty applications.
When selecting the suitable bearing type, the permissible axial force of the fixed bearing must also be taken into account.

Table 8.1 **Overview of standard shaft ends for SFA, SLA bearing series**

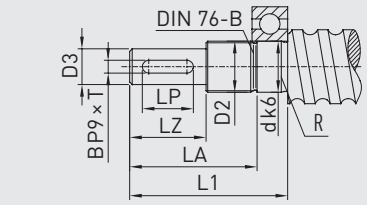

Supported bearing type S1
Bearing: deep groose ball bearing 60.. or 62..
For SLA bearing unit

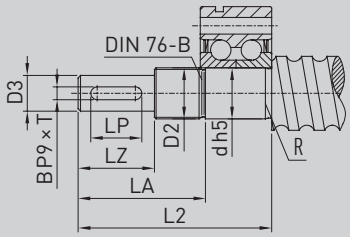

Fixed bearing type S2
Bearing: ZKLF.. or ZKLN..
For SFA bearing unit

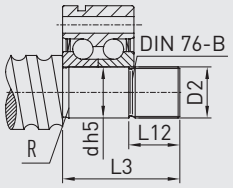

Fixed bearing type S3
Bearing: ZKLF.. or ZKLN..
For SFA bearing unit

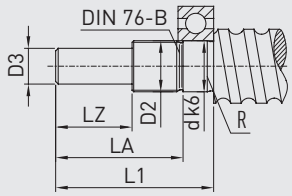

Supported bearing type S11
Bearing: deep groose ball bearing 60.. or 62..
For SLA bearing unit

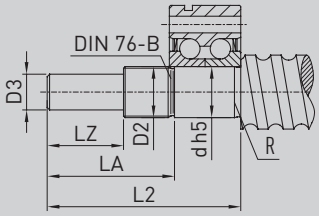

Fixed bearing type S21
Bearing: ZKLF.. or ZKLN..
For SFA bearing unit

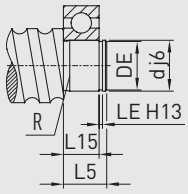

Supported bearing type S5
Bearing: deep groose ball bearing 62..
For SLA bearing unit

Example: Designation of shaft end, type S2, with the fit diameter d = 20: S2-20

When using bearings other than the specified bearing units, it must be checked whether the size of the bearing installation surface is sufficient.

Table 8.2 **Dimensions of standard shaft ends for SFA, SLA bearing series**

Shaft end type	Ballscrew nominal Ø	d	D2	D3	L1	L2	L3	L5	L12	L15	DE	LE	LA	LP	LZ	B × T	Recess R
S_-06	12	6	M6 × 0.5	5 j6	31	37	—	8	—	6	5.7 h10	0.80	26	—	16	—	10002475
S_-10	15, 16	10	M10 × 0.75	8 j6	39	50	30	12	12	9	9.6 h10	1.10	32	14	20	2 × 1.2	10002475
S_-12	20	12	M12 × 1	10 j6	43	58	35	13	12	10	11.5 h11	1.10	35	16	23	3 × 1.8	10002475
S_-17	25	17	M17 × 1	14 j6	60	73	43	15	20	12	16.2 h11	1.10	50	20	30	5 × 3	10002475
S_-20	32	20	M20 × 1	14 j6	62	76	46	17	20	14	19 h12	1.30	50	20	30	5 × 3	10002476
S_-25	40	25	M25 × 1.5	20 j6	83	96	46	19	20	15	23.9 h12	1.30	71	36	50	6 × 3.5	10002476
S_-30	40	30	M30 × 1.5	25 j6	95	108	48	20	22	16	28.6 h12	1.60	82	45	60	8 × 4	10002476
S_-40	50	40	M40 × 1.5	32 k6	119	135	55	22	24	18	37.5 h12	1.85	104	56	80	10 × 5	10002476
S_-50	63	50	M50 × 1.5	40 k6	142	155	55	25	24	20	47 h12	2.15	124	70	100	12 × 5	10002476
S_-60	80	60	M60 × 2	50 k6	155	177	67	28	25	22	57 h12	2.15	135	70	110	14 × 5.5	10002476

Unit: mm
It goes without saying that we also machine the shaft ends to your drawings and individual requirements.

Table 8.3 **Overview of standard shaft ends for EK, BK, FK, EF, BF, FF bearing series**

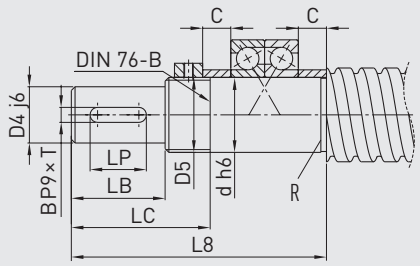

Fixed bearing type E8
Bearing: 70..
For EK, FK bearing units

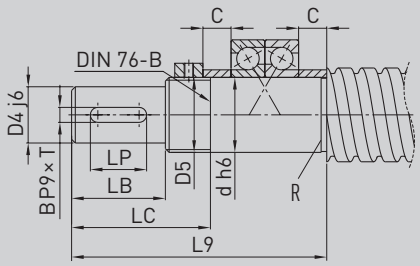

Fixed bearing type E9
Bearing: 72..
For BK bearing unit

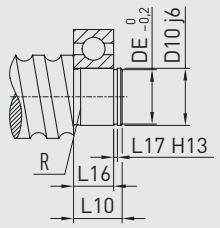

Supported bearing type E10
Bearing: deep groove ball bearing 60.. or 62..
For EF, BF, FF bearing units

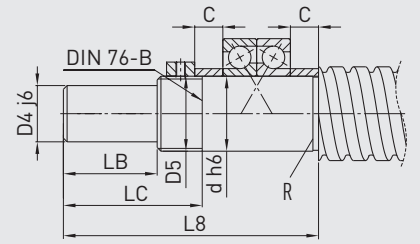

Fixed bearing type E81
Bearing: 70..
For EK, FK bearing units

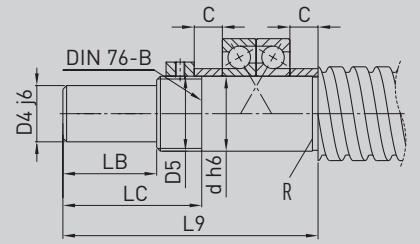

Fixed bearing type E91
Bearing: 72..
For BK bearing unit

Example: Designation of shaft end, type S3, with the fit diameter d = 10: S3-10

When using bearings other than the specified bearing units, it must be checked whether the size of the bearing installation surface is sufficient.

Table 8.4 **Dimensions of standard shaft ends for EK, BK, FK, EF, BF, FF bearing series**

Shaft end type	Ballscrew nominal Ø	d	D4	D5	D10	L8	L9	L10	L16	L17	DE	LB	LC	LP	B × T	C	Recess R
E_-08	12	8	6	M8 × 1	6	41	—	9	6	0.80	5.8	9	19	—	—	5.5	10002475
E_-10	15, 16	10	8	M10 × 1	8	56	—	10	7	0.90	7.7	20	31	14	2 × 1.2	5.5	10002475
E_-12	16 [1)]	12	10	M12 × 1	10	59	—	11	8	1.15	9.6	23	34	16	3 × 1.8	5.5	10002475
E_-15	20	15	12	M15 × 1	15	70	—	13	9	1.15	14.3	23	36	16	4 × 2.5	10.0	10002475
E_-20	25	20	17	M20 × 1	20	92	—	19	14	1.35	19.0	30	47	20	5 × 3.0	11.0	10002476
E_-25	32	25	20	M25 × 1.5	25	126	115	20	15	1.35	23.9	50	70	36	6 × 3.5	15.0 (9.0) [3)]	10002476
E_-30	40	30	25	M30 × 1.5	30	132	132	21	16	1.75	28.6	60	85	45	8 × 4.0	9.0	10002476
E_-40	50	40	35 [2)]	M40 × 1.5	40	—	173	23	18	1.95	38.0	80	115	56	10 × 5	15.0	10002476

Unit: mm
[1)] Depending on actual shaft outer diameter $d_{s\,min}$ = 15.5
[2)] Tolerance k6
[3)] For BK 25
It goes without saying that we also machine the shaft ends to your drawings and individual requirements.

Table 8.5 **Overview of standard shaft ends for WBK bearing series**

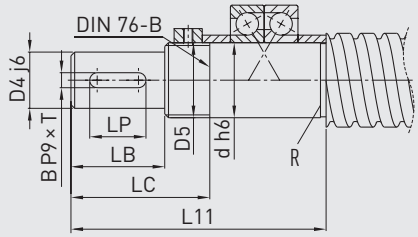

Fixed bearing type W1
Bearing: BSB..
For WBK_DF bearing unit

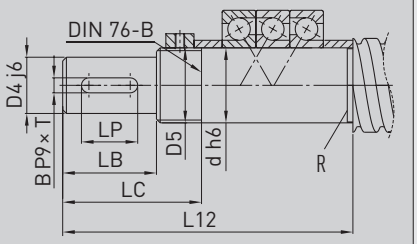

Fixed bearing type W2
Bearing: BSB..
For WBK_DFD bearing unit

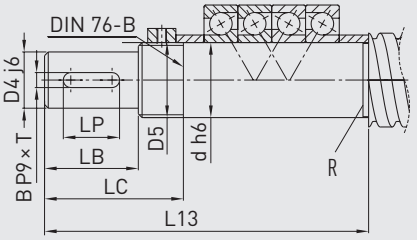

Fixed bearing type W3
Bearing: BSB..
For WBK_DFF bearing unit

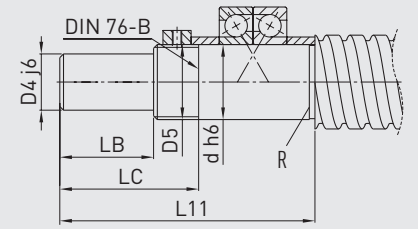

Fixed bearing type W11
Bearing: BSB..
For WBK_DF bearing unit

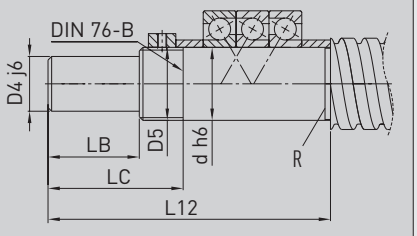

Fixed bearing type W21
Bearing: BSB..
For WBK_DFD bearing unit

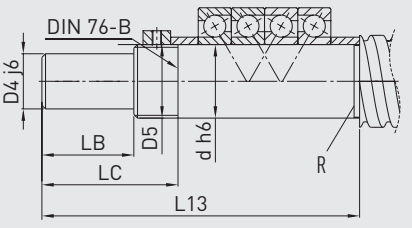

Fixed bearing type W31
Bearing: BSB..
For WBK_DFF bearing unit

Example: Designation of shaft end, type W2, with the fit diameter d = 20: W2-20

When using bearings other than the specified bearing units, it must be checked whether the size of the bearing installation surface is sufficient.

Table 8.6 **Dimensions of standard shaft ends for WBK bearing series**

Shaft end type	Ballscrew nominal Ø	d	D4	D5	L11	L12	L13	LB	LC	LP	B × T	Recess R
W_-15	20	15	12	M15 × 1	104	—	—	23	46	16	4 × 2.5	10002475
W_-17	25	17	14	M17 × 1	111	—	—	30	53	20	5 × 3.0	10002475
W_-20	25	20	17	M20 × 1	111	—	—	30	53	20	5 × 3.0	10002476
W_-25	32	25	20	M25 × 1.5	139	154	—	50	76	36	6 × 3.5	10002476
W_-30	40	30	25	M30 × 1.5	149	164	—	60	86	45	8 × 4.0	10002476
W_-35	45	35	30	M35 × 1.5	152	167	182	60	90	45	8 × 4.0	10002476
W_-40	50	40	35 [1)]	M40 × 1.5	172	187	202	80	110	56	10 × 5.0	10002476

Unit: mm
[1)] Tolerance k6
It goes without saying that we also machine the shaft ends to your drawings and individual requirements.

Table 8.7 **HIWIN recesses**

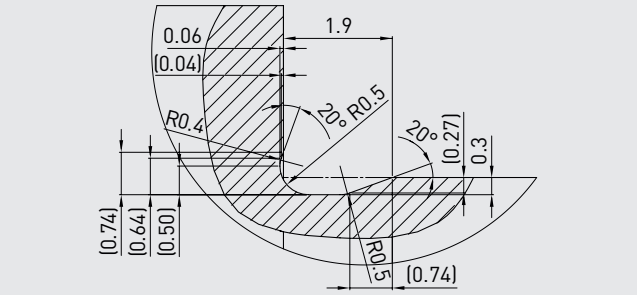

HIWIN recess 10002475

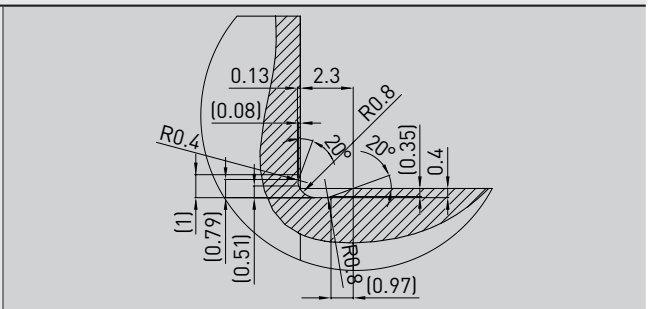

HIWIN recess 10002476

Table 8.8 **Overview of bearing type and associated end machining for SLA, SFA bearing units**

Ballscrew nominal Ø	Fixed bearing		Supported bearing	
	Pillow block	**End machining**	**Pillow block**	**End machining**
12	SFA06	S21-06	SLA06	S5-06 / S11-06
15, 16	SFA10	S2-10 / S3-10 / S21-10	SLA10	S1-10 / S5-10 / S11-10
20	SFA12	S2-12 / S3-12 / S21-12	SLA12	S1-12 / S5-12 / S11-12
25	SFA17	S2-17 / S3-17 / S21-17	SLA17	S1-17 / S5-17 / S11-17
32	SFA20	S2-20 / S3-20 / S21-20	SLA20	S1-20 / S5-20 / S11-20
40	SFA30	S2-30 / S3-30 / S21-30	SLA30	S1-30 / S5-30 / S11-30
50	SFA40	S2-40 / S3-40 / S21-40	SLA40	S1-40 / S5-40 / S11-40

Table 8.9 **Overview of bearing type and associated end machining for EK, BK, FK, EF, BF, FF bearing series**

Ballscrew nominal Ø	Fixed bearing				Supported bearing			
	Pillow block	**End machining**	**Flange bearing**	**End machining**	**Pillow block**	**End machining**	**Flange bearing**	**End machining**
12	EK08	E81-08	FK08	E81-08	EF08	E10-08	—	—
15, 16	EK10	E8-10 / E81-10	FK10	E8-10 / E81-10	EF10	E10-10	FF10	E10-10
16 [1)]	EK12	E8-12 / E81-12	FK12	E8-12 / E81-12	EF12	E10-12	FF12	E10-12
20	EK15	E8-15 / E81-15	FK15	E8-15 / E81-15	EF15	E10-15	FF15	E10-15
25	EK20	E8-20 / E81-20	FK20	E8-20 / E81-20	EF20	E10-20	FF20	E10-20
32	BK25	E9-25 / E91-25	FK25	E8-25 / E81-25	BF25	E10-25	FF25	E10-25
40	BK30	E9-30 / E91-30	FK30	E8-30 / E81-30	BF30	E10-30	FF30	E10-30
50	BK40	E9-40 / E91-40	—	—	BF40	E10-40	—	—

[1)] Depending on actual shaft outer diameter $d_{s\,min}$ = 15.5

Table 8.10 **Overview of bearing type and associated end machining for WBK bearing unit**

Ballscrew nominal Ø	Flange bearing	End machining
20	WBK15DF	W1-15 / W11-15
25	WBK17DF	W1-17 / W11-17
25	WBK20DF	W1-20 / W11-20
32	WBK25DF	W1-25 / W11-25
32	WBK25DFD	W2-25 / W21-25
40	WBK30DF	W1-30 / W11-30
40	WBK30DFD	W2-30 / W21-30
45	WBK35DF	W1-35 / W11-35
45	WBK35DFD	W2-35 / W21-35
45	WBK35DFF	W3-35 / W31-35
50	WBK40DF	W1-40 / W11-40
50	WBK40DFD	W2-40 / W21-40
50	WBK40DFF	W3-40 / W31-40

8.2 WBK bearing series

series are especially suited to use in heavy-duty ballscrews. Depending on the axial loads present, the WBK bearing units are available with the DF, DFD and DFF bearing arrangements. The bearings are lubricated for life.
The end machining processes suited to the WBK fixed bearing are types W1, W2 and W3 (Section 8.1).

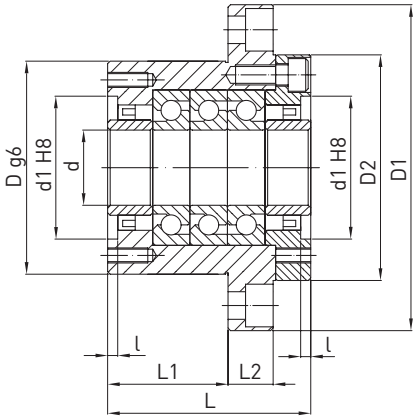

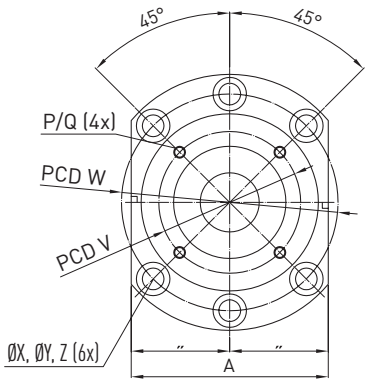

BP 1
d ≤ 30

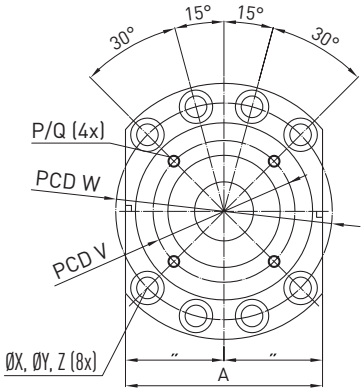

BP 2
d > 30

BP Hole pattern

Table 8.11 **Bearing unit dimensions**

Type	Shaft nominal Ø	d	D	D1	D2	L	L1	L2	A	W	Hole X	Counter bore Y	Counter bore depth Z	d1	l	V	P	Q
WBK15DF	20	15	70	106	72	60	32	15	80	88	9	14.0	8.5	45	3	58	M5	10
WBK17DF	25	17	70	106	72	60	32	15	80	88	9	14.0	8.5	45	3	58	M5	10
WBK20DF	25	20	70	106	72	60	32	15	80	88	9	14.0	8.5	45	3	58	M5	10
WBK25DF	32	25	85	130	90	66	33	18	100	110	11	17.5	11.0	57	4	70	M6	12
WBK25DFD	32	25	85	130	90	81	48	18	100	110	11	17.5	11.0	57	4	70	M6	12
WBK30DF	40	30	85	130	90	66	33	18	100	110	11	17.5	11.0	57	4	70	M6	12
WBK30DFD	40	30	85	130	90	81	48	18	100	110	11	17.5	11.0	57	4	70	M6	12
WBK35DF	45	35	95	142	102	66	33	18	106	121	11	17.5	11.0	69	4	80	M6	12
WBK35DFD	45	35	95	142	102	81	48	18	106	121	11	17.5	11.0	69	4	80	M6	12
WBK35DFF	45	35	95	142	102	96	48	18	106	121	11	17.5	11.0	69	4	80	M6	12
WBK40DF	50	40	95	142	102	66	33	18	106	121	11	17.5	11.0	69	4	80	M6	12
WBK40DFD	50	40	95	142	102	81	48	18	106	121	11	17.5	11.0	69	4	80	M6	12
WBK40DFF	50	40	95	142	102	96	48	18	106	121	11	17.5	11.0	69	4	80	M6	12

Unit: mm

Bearing arrangements

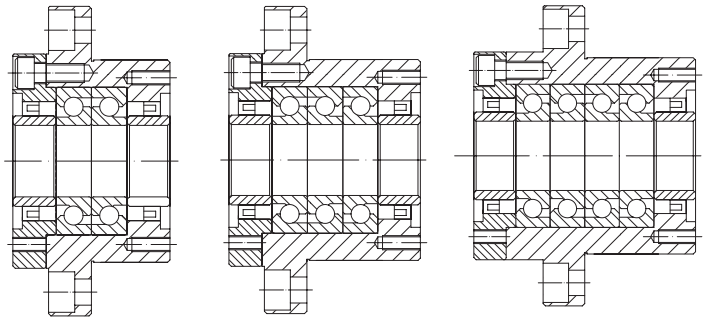

DF Type DFD Type DFF Type

Bearing structure

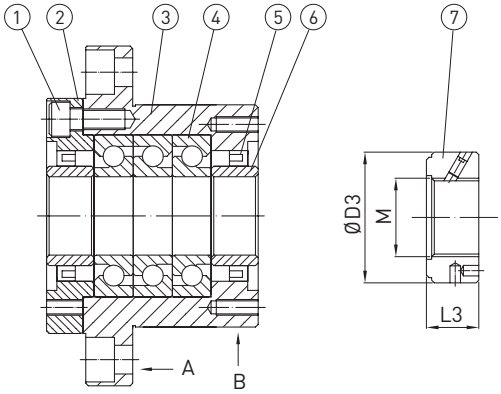

(1) Mounting bolt, (2) Bearing cover, (3) Bearing housing, (4) Bearing, (5) Seal, (6) Spacer, (7) Lock nut

Note:
1. Use reference planes A and B for alignment during assembly.
2. To ensure high accuracy, parts 1 – 6 must not be disassembled.

Table 8.12 **Technical data of bearing**

Type	Dynamic load rating C_{dyn} [kN]	Permissible axial load [kN]	Preload [kN]	Axial rigidity [N/μm]	Starting torque [Nm]	Lock nut				Weight [kg]	Article number
						M	D3	L3	Nut tightening torque [Nm]		
WBK15DF	21.9	26.6	2.15	750	0.19	M15 × 1	30	14	35	1.9	18-000023
WBK17DF	21.9	26.6	2.15	750	0.19	M17 × 1	32	16	42	1.9	18-000024
WBK20DF	21.9	26.6	2.15	750	0.19	M20 × 1	38	16	46	1.9	18-000025
WBK25DF	28.5	40.5	3.15	1,000	0.29	M25 × 1.5	38	18	87	3.1	18-000026
WBK25DFD	46.5	81.5	4.30	1,470	0.39	M25 × 1.5	38	18	87	3.4	18-000027
WBK30DF	29.2	43.0	3.35	1,030	0.30	M30 × 1.5	45	18	105	3.0	18-000028
WBK30DFD	47.5	86.0	4.50	1,520	0.40	M30 × 1.5	45	18	105	3.3	18-000029
WBK35DF	31.0	50.0	3.80	1,180	0.34	M35 × 1.5	52	18	340	3.4	18-000030
WBK35DFD	50.5	100.0	5.20	1,710	0.45	M35 × 1.5	52	18	340	4.3	18-000031
WBK35DFF	50.5	100.0	7.65	2,350	0.59	M35 × 1.5	52	18	340	5.0	18-000032
WBK40DF	31.5	52.0	3.90	1,230	0.36	M40 × 1.5	58	20	500	3.6	18-000033
WBK40DFD	51.5	104.0	5.30	1,810	0.47	M40 × 1.5	58	20	500	4.2	18-000034
WBK40DFF	51.5	104.0	7.85	2,400	0.61	M40 × 1.5	58	20	500	5.7	18-000035

8.3 SFA/SLA bearing series

8.3.1 Fixed bearing SFA

The axis height of the fixed bearing is matched to supported bearing SLA (Section 8.3.2) and nut housing GFD (Section 8.4). The pillow block can be screwed on from above (S1) and below (S2).
The reference edge makes it easier to align the unit. The fixed bearing can be pinned with two tapered pins or cylindrical pins. The end machining suited to the fixed bearing is the S2-xx/S3-xx type (Section 8.1).

SFA06/SFA10

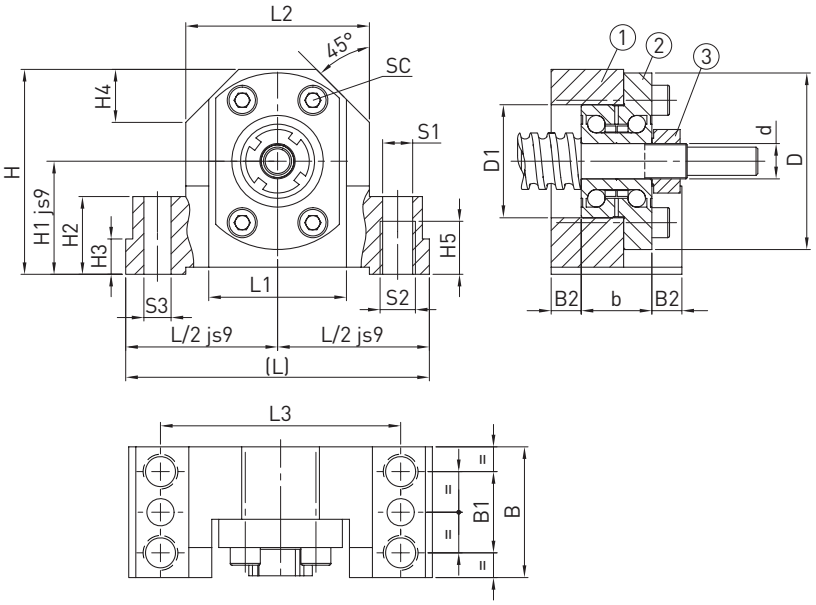

(1) Steel pillow block housing, (2) Bearing, (3) Lock nut

Table 8.13 **Bearing unit dimensions**

Type	Shaft nominal Ø	L	L/2	L1	L2	L3	H	H1	H2	H3	H4	H5	d	D	D1	b
SFA06	12	62	31	34	38	50	41	22	13	5	11	9	6	30	19	12
SFA10	16	86	43	52	52	68	58	32	22	10	15	15	10	50	32	20

Unit: mm

Table 8.14 **Bearing unit dimensions**

Type	Shaft nominal Ø	B	B1	B2	S1	S2	S3	SC ISO 4762-10.9
SFA06	12	32	16	10.0	5.3	M6	3.7	4 × M3 × 12
SFA10	16	37	23	8.5	8.5	M10	7.7	4 × M5 × 20

Unit: mm

Table 8.15 **Technical data of bearing**

Type	Bearing type	C_0 axial [N]	C_{dyn} axial [N]	Permissible speed [rpm]	Lock nut				Article number
					Type	**Nut tightening torque [Nm]**	**Screw size**	**Screw tightening torque [Nm]**	
SFA06	ZKLFA0630.2Z	6,100	4,900	14,000	HIR 06	2	M4	1	18-000109
SFA10	ZKLFA1050.2RS	8,500	6,900	6,800	HIR 10	6	M4	1	18-000111

SFA12 – SFA40

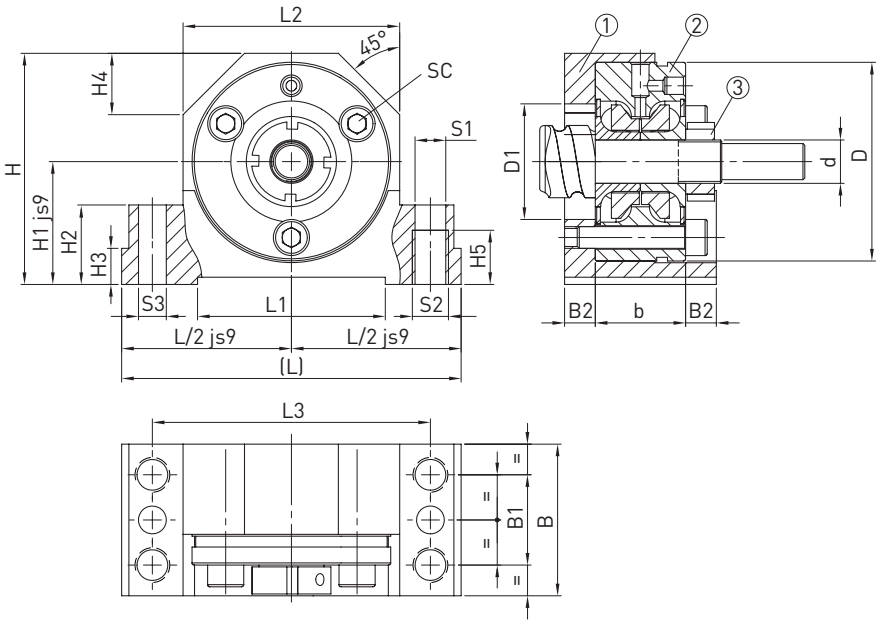

(1) Steel pillow block housing, (2) Bearing, (3) Lock nut

Table 8.16 **Bearing unit dimensions**

Type	Shaft nominal Ø	L	L/2	L1	L2	L3	H	H1	H2	H3	H4	H5	d	D	D1	b
SFA12	20	94	47	52	60	77	64	34	22	10	17	15	12	55	32	25
SFA17	25	108	54	65	66	88	72	39	27	10	19	18	17	62	36	25
SFA20	32	112	56	65	73	92	78	42	27	10	20	18	20	68	42	28
SFA30	40	126	63	82	84	105	92	50	32	13	23	21	30	80	52	28
SFA40	50	146	73	82	104	125	112	60	32	13	30	21	40	100	66	34

Unit: mm

Table 8.17 **Bearing unit dimensions**

Type	Shaft nominal Ø	B	B1	B2	S1	S2	S3	Lock nut	SC ISO 4762-10.9
SFA12	20	42	25	8.5	8.5	M10	7.7	HIR 12	3 × M6 × 35
SFA17	25	46	29	10.5	10.5	M12	9.7	HIR 17	3 × M6 × 35
SFA20	32	49	29	10.5	10.5	M12	9.7	HIR 20 × 1	4 × M6 × 40
SFA30	40	53	32	12.5	12.6	M14	9.7	HIR 30	6 × M6 × 40
SFA40	50	59	34	12.5	12.6	M14	9.7	HIR 40	4 × M8 × 50

Unit: mm

Table 8.18 **Technical data of bearing**

Type	Bearing type	C_0 axial [N]	C_{dyn} axial [N]	Permissible speed [rpm]	Lock nut				Article number
					Type	**Nut tightening torque [Nm]**	**Screw size**	**Screw tightening torque [Nm]**	
SFA12	ZKLF1255.2RS-PE	24,700	18,600	3,800	HIR 12	8	M4	1	18-000113
SFA17	ZKLF1762.2RS-PE	31,000	20,700	3,300	HIR 17	15	M5	3	18-000116
SFA20	ZKLF2068.2RS-PE	47,000	28,500	3,000	HIR 20 × 1	18	M5	3	18-000274
SFA30	ZKLF3080.2RS-PE	64,000	32,000	2,200	HIR 30	32	M6	5	18-000121
SFA40	ZKLF40100.2RS-PE	101,000	47,500	1,800	HIR 40	55	M6	5	18-000123

8.3.2 Supported bearing SLA

The axis height of the supported bearing is matched to fixed bearing SFA (Section 8.3.1) and nut housing GFD (Section 8.4). The pillow block can be screwed on from above (S1) and below (S2).
The reference edge makes it easier to align the unit. The end machining suited to the supported bearing is the S1-x type (Section 8.1).

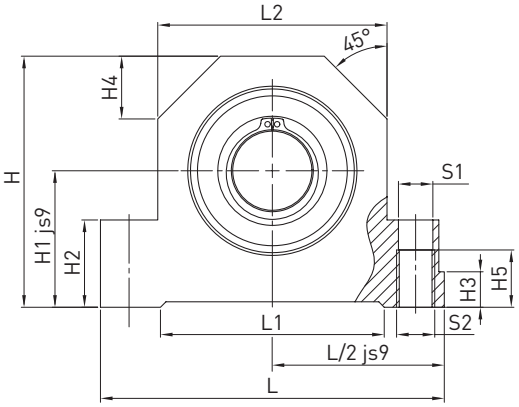

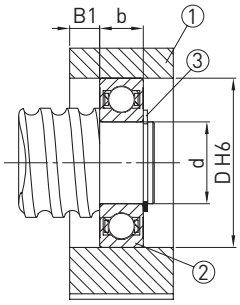

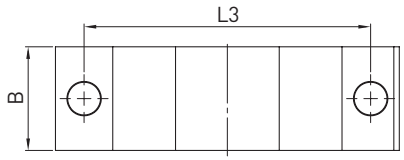

(1) Steel pillow block housing, (2) Bearing, (3) Circlip

Table 8.19 **Bearing unit dimensions**

Type	Shaft nominal Ø	L	L/2	L1	L2	L3	H	H1	H2	H3	H4	H5	b
SLA06	12	62	31	34	38	50	41	22	13	5	11	9	6
SLA10	16	86	43	52	52	68	58	32	22	7	15	15	9
SLA12	20	94	47	52	60	77	64	34	22	10	17	15	10
SLA17	25	108	54	65	66	88	72	39	27	10	19	18	12
SLA20	32	112	56	65	72	92	78	42	27	10	20	18	14
SLA30	40	126	63	82	84	105	92	50	32	13	23	21	16
SLA40	50	146	73	82	104	125	112	60	32	13	30	21	18

Unit: mm

Table 8.20 **Bearing unit dimensions**

Type	Shaft nominal Ø	B	B1	S1	S2	d	D	Circlip DIN 471	Deep groove ball bearing DIN 625	Article number
SLA06	12	15	4.5	5.3	M6	6	19	6 × 0.7	626.2RS	18-000125
SLA10	16	24	7.5	8.4	M10	10	30	10 × 1	6200.2RS	18-000127
SLA12	20	26	8.0	8.4	M10	12	32	12 × 1	6201.2RS	18-000129
SLA17	25	28	8.0	10.5	M12	17	40	17 × 1	6203.2RS	18-000132
SLA20	32	34	10.0	10.5	M12	20	47	20 × 1.2	6204.2RS	18-000134
SLA30	40	38	11.0	12.6	M14	30	62	30 × 1.5	6206.2RS	18-000137
SLA40	50	44	13.0	12.6	M14	40	80	40 × 1.75	6208.2RS	18-000139

Unit: mm

8.4 Housing for flange nuts (DIN 69051 Part 5)

The nut housing is suitable for assembling flange nuts DEB-x, DDB-x and FSCDIN.
The axis height of the housing is matched to fixed bearing SFA (Section 8.3.1) and the supported bearing SLA (Section 8.3.2).
The housing can be screwed on from above (S1) and below (S2). The housing can be pinned with two tapered pins or cylindrical pins. Screws of strength class 8.8 should be used for the fastening.

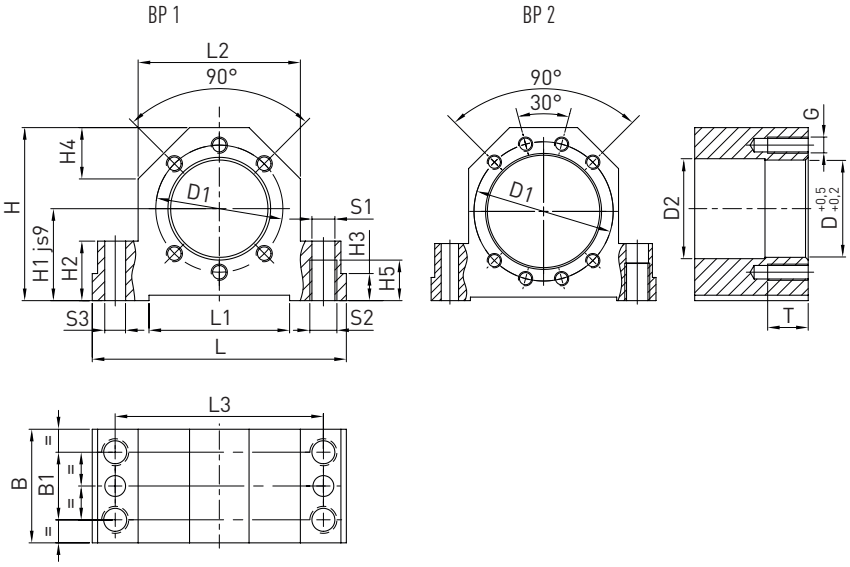

BP Hole pattern

Table 8.21 **Housing dimensions**

Type	Shaft nominal Ø	L	L1	L2	L3	H	H1	H2	H3	H4	H5
GFD16	16	86	52	52	68	58	32	22	7	15	15
GFD20	20	94	52	60	77	64	34	22	7	17	15
GFD25	25	108	65	66	88	72	39	27	10	19	18
GFD32	32	112	65	72	92	82	42	27	10	19	18
GFD40	40	126	82	84	105	97	50	32	13	23	21
GFD50	50	146	82	104	125	115	60	32	13	30	21

Unit: mm

Table 8.22 **Housing dimensions**

Type	Shaft nominal Ø	D	D1	D2	B	B1	S1	S2	S3	Hole pattern	G	T	Article number
GFD16	16	28	38	29	37	23	8.4	M10	7.7	1	M5	12	1-000016
GFD20	20	36	47	37	42	25	8.4	M10	7.7	1	M6	15	1-000017
GFD25	25	40	51	41	46	29	10.5	M12	9.7	1	M6	15	1-000027
GFD32	32	50	65	51	49	29	10.5	M12	9.7	1	M8	20	1-000028
GFD40	40	63	78	64	53	32	12.6	M14	9.7	2	M8	20	1-000039
GFD50	50	75	93	76	59	34	12.6	M14	9.7	2	M10	25	1-000062

Unit: mm

8.5 EK/EF bearing series

8.5.1 Fixed bearing EK

The axis height of the fixed bearing is matched to supported bearing EF (Section 8.5.2).
The end machining suited to fixed bearing EK is the E8-xx type (Section 8.1).
The bearings are lubricated for life.

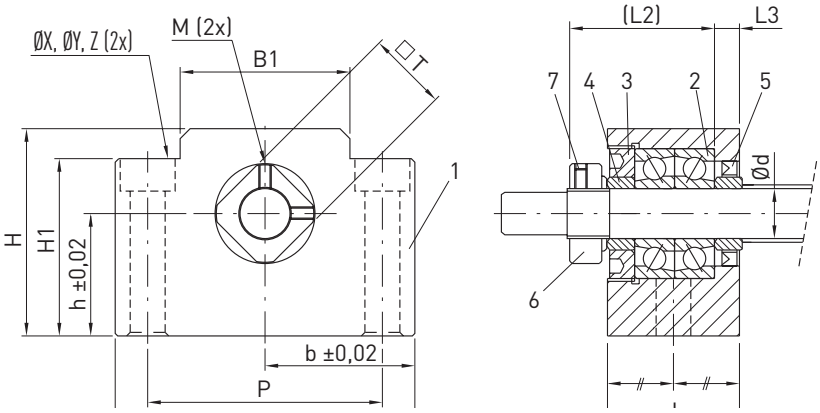

(1) Housing, (2) Bearing, (3) Retaining cover, (4) Support ring, (5) Seal, (6) Clamping nut, (7) Allen set screw

Table 8.23 **Bearing unit dimensions**

Type	Shaft nominal Ø	d	L	L2	L3	B	H	b	h	B1	H1	P	Hole X	Counter bore Y	Counter bore depth Z	M	T
EK08	12	8	23	26	4	52	32	26	17	25	26	38	6.6	11	12	M3	14

Unit: mm

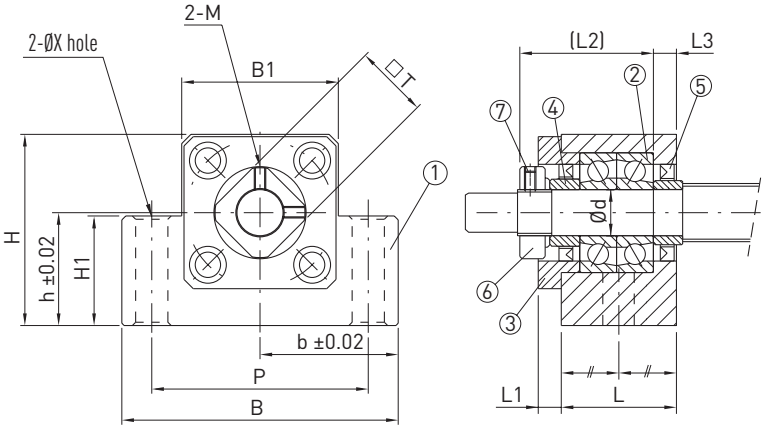

(1) Housing, (2) Bearing, (3) Retaining cover, (4) Support ring, (5) Seal, (6) Clamping nut, (7) Allen set screw

Table 8.24 **Bearing unit dimensions**

Type	Shaft nominal Ø	d	L	L1	L2	L3	B	H	b	h	B1	H1	P	X	M	T
EK10	16	10	24	6	29.5	6	70	43	35.0	25	36	24	52	9	M3	16
EK12	16 [1)]	12	24	6	29.5	6	70	43	35.0	25	36	24	52	9	M4	19
EK15	20	15	25	6	36.0	5	80	49	40.0	30	41	25	60	11	M4	22
EK20	25	20	42	10	50.0	10	95	58	47.5	30	56	25	75	11	M4	30

Unit: mm
[1)] Depending on actual shaft outer diameter $d_{s\,min}$ = 15.5

Table 8.25 **Technical data of bearing**

Type	Bearing type	C_0 axial [N]	C_{dyn} axial [N]	Max. permissible axial load [N]	Lock nut				Article number
					Type	Nut tightening torque [Nm]	Screw size	Screw tightening torque [Nm]	
EK08	708	4,800	2,800	1,100	RN8	2.5	M3	0.6	18-000428
EK10	7000A P0	8,800	5,200	2,000	RN10	2.9	M3	0.6	18-000429
EK12	7001A P0	9,400	6,000	2,200	RN12	6.4	M4	1.5	18-000430
EK15	7002A P0	10,000	6,900	2,400	RN15	7.9	M4	1.5	18-000431
EK20	7204B P0	21,600	15,200	6,800	RN20	16.7	M4	1.5	18-000432

8.5.2 Supported bearing EF

The axis height of the supported bearing is matched to fixed bearing EK (Section 8.5.1).
The end machining suited to supported bearing EF is the E10-xx type (Section 8.1).
The bearings are lubricated for life.

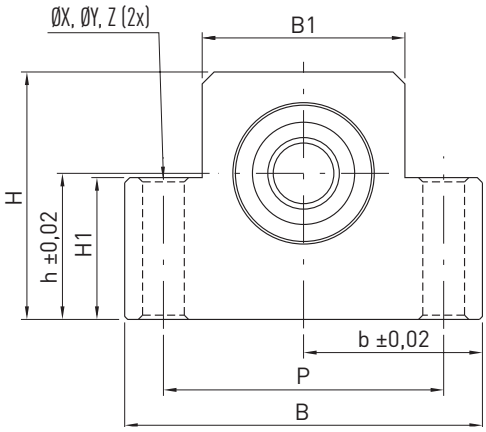

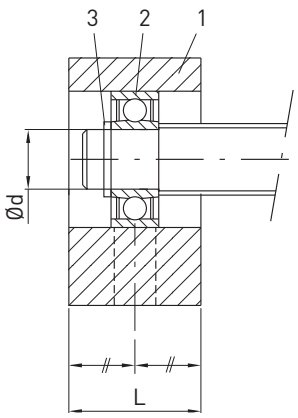

(1) Housing, (2) Bearing, (3) Circlip

Table 8.26 **Bearing unit dimensions**

Type	Shaft nominal Ø	d	L	B	H	b	h	B1	H1	P	Hole X	Counter bore Y	Counter bore depth Z	Bearing	Circlip	Article number
EF08	12	6	14	52	32	26.0	17	25	26	38	6.6	11	12	606ZZ	S 06	18-000433
EF10	16	8	20	70	43	35.0	25	36	24	52	9.0	—	—	608ZZ	S 08	18-000434
EF12	16 [1)]	10	20	70	43	35.0	25	36	24	52	9.0	—	—	6000ZZ	S 10	18-000435
EF15	20	15	20	80	49	40.0	30	41	25	60	9.0	—	—	6002ZZ	S 15	18-000436
EF20	25	20	26	95	58	47.5	30	56	25	75	11.0	—	—	6204ZZ	S 20	18-000437

Unit: mm
[1)] Depending on actual shaft outer diameter $d_{s\,min}$ = 15.5

8.6 BK/BF bearing series

8.6.1 Fixed bearing BK

The axis height of the fixed bearing is matched to supported bearing BF (Section 8.6.2).
The end machining suited to fixed bearing BK is the E9-xx type (Section 8.1).
The bearings are lubricated for life.

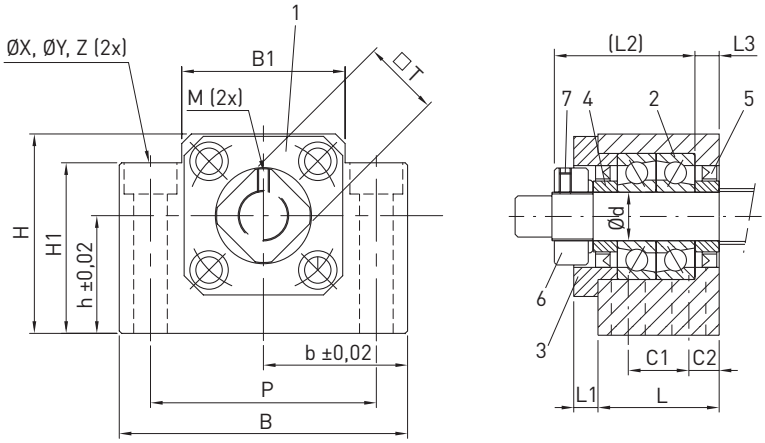

(1) Housing, (2) Bearing, (3) Retaining cover, (4) Support ring, (5) Seal, (6) Clamping nut, (7) Allen set screw

Table 8.27 **Bearing unit dimensions**

Type	Shaft nominal Ø	d	L	L1	L2	L3	B	H	b	h
BK25	32	25	42	12	54	9	106	80	53	48
BK30	40	30	45	14	61	9	128	89	64	51
BK40	50	40	61	18	76	15	160	110	80	60

Unit: mm

Table 8.28 **Bearing unit dimensions**

Type	Shaft nominal Ø	B1	H1	P	C1	C2	Hole X	Counter bore Y	Counter bore depth Z	M	T
BK25	32	64	70	85	22	10	11	17	11.0	M6	35
BK30	40	76	78	102	23	11	14	20	13.0	M6	40
BK40	50	100	90	130	33	14	18	26	17.5	M6	50

Unit: mm

Table 8.29 **Technical data of bearing**

Type	Bearing type	C_0 axial [N]	C_{dyn} axial [N]	Max. permissible axial load [N]	Lock nut				Article number
					Type	**Nut tightening torque [Nm]**	**Screw size**	**Screw tightening torque [Nm]**	
BK25	7205A P0	26,300	20,500	7,000	RN25	21	M6	5	18-000439
BK30	7206B P0	33,500	27,000	10,600	RN30	31	M6	5	18-000440
BK40	7208B P0	52,000	46,100	18,000	RN40	71	M6	5	18-000441

8.6.2 Supported bearing BF

The axis height of the supported bearing is matched to fixed bearing BK (Section 8.6.1). The end machining suited to supported bearing BF is the E10-xx type (Section 8.1).

The bearings are lubricated for life.

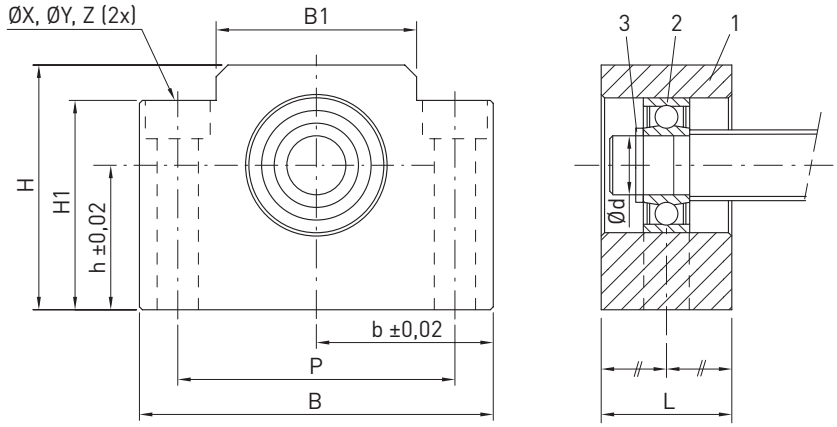

(1) Housing, (2) Bearing, (3) Circlip

Table 8.30 **Bearing unit dimensions**

Type	Shaft nominal Ø	d	L	B	H	b	h	B1	H1	P	Hole X	Counter bore Y	Counter bore depth Z	Bearing	Circlip	Article number
BF25	32	25	30	106	80	53	48	64	70	85	11	17	11.0	6205ZZ	S 25	18-000443
BF30	40	30	32	128	89	64	51	76	78	102	14	20	13.0	6206ZZ	S 30	18-000444
BF40	50	40	37	160	110	80	60	100	90	130	18	26	17.5	6208ZZ	S 40	18-000445

Unit: mm

8.7 FK/FF bearing series

8.7.1 Fixed bearing FK

The associated supporting bearing unit is the FF bearing series (Section 8.7.2). The end machining suited to fixed bearing FK is the E8-xx type (Section 8.1).
The bearings are lubricated for life.

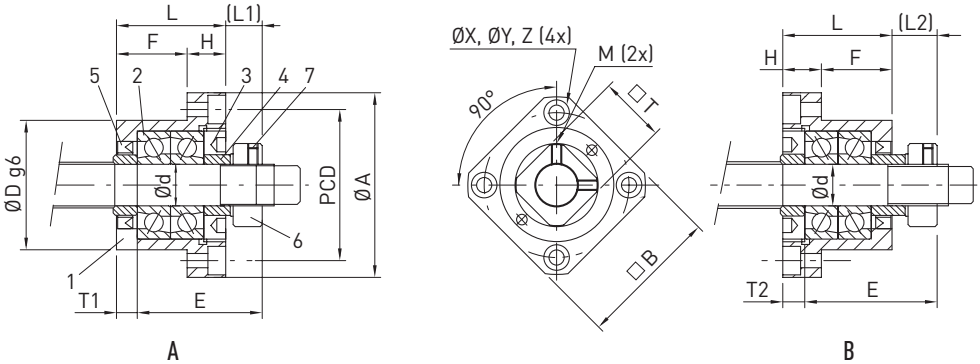

(1) Housing, (2) Bearing, (3) Retaining cover, (4) Support ring, (5) Seal, (6) Clamping nut, (7) Allen set screw

Table 8.31 **Bearing unit dimensions**

Type	Shaft nominal Ø	d	L	H	F	E	D	A	PCD	B	Assembly variant A		Assembly variant B		Hole X	Counter bore Y	Counter bore depth Z	M	T
											L1	**T1**	**L2**	**T2**					
FK08	12	8	23	9	14	26	28	43	35	35	7	4	8	5	3.4	6.5	4	M3	14

Unit: mm

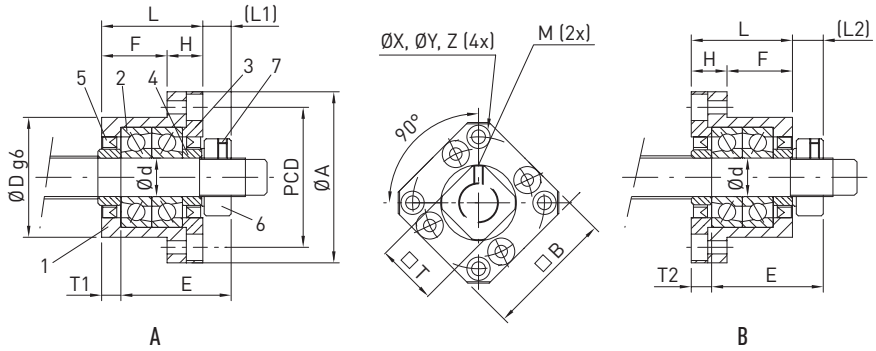

(1) Housing, (2) Bearing, (3) Retaining cover, (4) Support ring, (5) Seal, (6) Clamping nut, (7) Allen set screw

Table 8.32 **Bearing unit dimensions**

Type	Shaft nominal Ø	d	L	H	F	E	D	A	PCD	B	Assembly variant A		Assembly variant B		Hole X	Counter bore Y	Counter bore depth Z	M	T
											L1	T1	L2	T2					
FK10	16	10	27	10	17	29.5	34	52	42	42	7.5	5	8.5	6	4.5	8.0	5	M3	16
FK12	16 [1)]	12	27	10	17	29.5	36	54	44	44	7.5	5	8.5	6	4.5	8.0	5	M4	19
FK15	20	15	32	15	17	36.0	40	63	50	52	10.0	6	12.0	8	5.5	9.5	6	M4	22
FK20	25	20	52	22	30	50.0	57	85	70	68	8.0	10	12.0	14	6.6	11.0	10	M4	30
FK25	32	25	57	27	30	60.0	63	98	80	79	13.0	10	20.0	17	9.0	15.0	13	M6	35
FK30	40	30	62	30	32	61.0	75	117	95	93	11.0	12	17.0	18	11.0	17.5	15	M6	40

Unit: mm

[1)] Depending on actual shaft outer diameter $d_{s\,min}$ = 15.5

Table 8.33 **Technical data of bearing**

Type	Bearing type	C_0 axial [N]	C_{dyn} axial [N]	Max. permissible axial load [N]	Lock nut				Article number
					Type	**Nut tightening torque [Nm]**	**Screw size**	**Screw tightening torque [Nm]**	
FK08	708	4,800	2,800	1,000	RN8	2.5	M3	0.6	18-000446
FK10	7000A P0	8,800	5,200	1,900	RN10	2.9	M3	0.6	18-000037
FK12	7001A P0	9,400	6,000	2,200	RN12	6.4	M4	1.5	18-000447
FK15	7002A P0	10,000	6,900	2,400	RN15	7.9	M4	1.5	18-000448
FK20	7204B P0	21,600	15,300	6,800	RN20	16.7	M4	1.5	18-000449
FK25	7205B P0	24,000	19,000	8,100	RN25	20.6	M6	4.9	18-000450
FK30	7206B P0	33,500	27,000	10,600	RN30	31.4	M6	4.9	18-000451

8.7.2 Supported bearing FF

The associated fixed bearing unit is the FK bearing series (Section 8.7.1). The end machining suited to supported bearing FF is the E10-xx type (Section 8.1).
The bearings are lubricated for life.

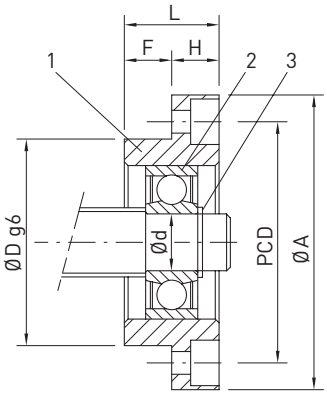

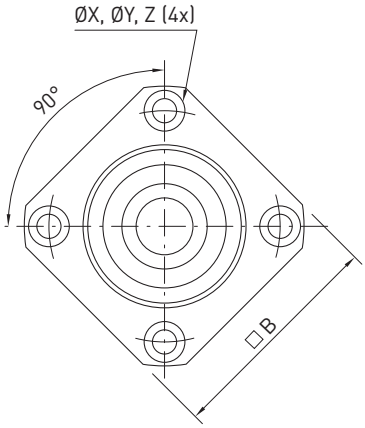

(1) Housing, (2) Bearing, (3) Circlip

Table 8.34 **Bearing unit dimensions**

Type	Shaft nominal Ø	d	L	H	F	D	A	PCD	B	Hole X	Counter bore Y	Counter bore depth Z	Bearing	Circlip	Article number
FF10	16	8	12	7	5	28	43	35	35	3.4	6.5	4.0	608ZZ	S 08	18-000452
FF12	16 [1)]	10	15	7	8	34	52	42	42	4.5	8.0	4.0	6000ZZ	S 10	18-000453
FF15	20	15	17	9	8	40	63	50	52	5.5	9.5	5.5	6002ZZ	S 15	18-000454
FF20	25	20	20	11	9	57	85	70	68	6.6	11.0	6.5	6204ZZ	S 20	18-000455
FF25	32	25	24	14	10	63	98	80	79	9.0	14.0	8.5	6205ZZ	S 25	18-000456
FF30	40	30	27	18	9	75	117	95	93	11.0	17.0	11.0	6206ZZ	S 30	18-000457

Unit: mm
[1)] Depending on actual shaft outer diameter $d_{s\,min}$ = 15.5

8.8 Axial angular contact ball bearing

8.8.1 Angular contact ball bearing ZKLFA

- Double-row angular contact ball bearing in O arrangement with 60° contact angle
- Outer ring suitable for flange mounting
- Split inner ring with defined gap for matching of preload
- Lubricated for life for most applications

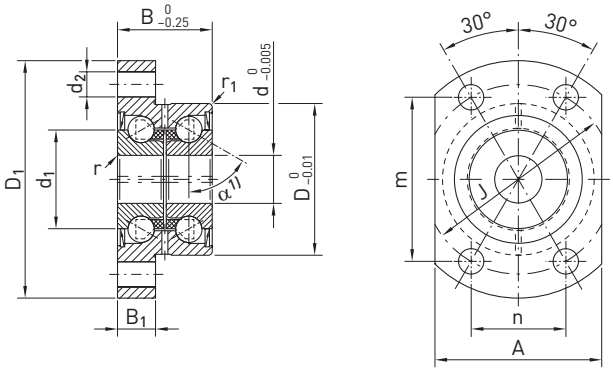

Housing and shaft tolerances:

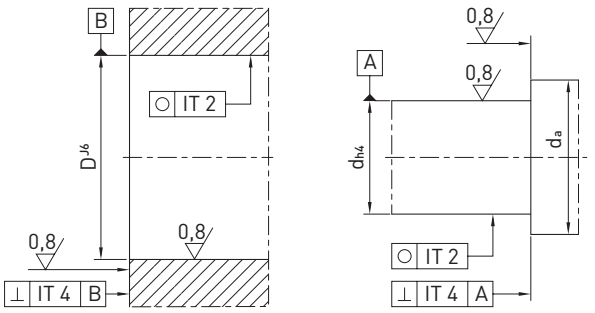

Housing Shaft

Table 8.35 **Dimensions and connecting dimensions for angular ball bearing unit ZKLFA**

Type	Shaft diameter [mm]	Weight [kg]	Dimensions [mm]													Connecting dimensions [mm]	
			d	D	B	D_1	B_1	J	d_2	m	n	A	d_1	r_{min}	$r_{1\,min}$	$d_{a\,max}$	$d_{a\,min}$
ZKLFA0630.2Z	6	0.05	6	19	12	30	5	24	3.5	21.0	12.0	22	12	0.3	0.3	15	9
ZKLFA0640.2RS	6	0.08	6	24	15	40	6	32	4.5	27.5	16.0	27	14	0.3	0.6	18	9
ZKLFA0640.2Z	6	0.08	6	24	15	40	6	32	4.5	27.5	16.0	27	14	0.3	0.6	18	9
ZKLFA0850.2RS	8	0.17	8	32	20	50	8	40	5.5	34.5	20.0	35	19	0.3	0.6	25	11
ZKLFA0850.2Z	8	0.17	8	32	20	50	8	40	5.5	34.5	20.0	35	19	0.3	0.6	25	11
ZKLFA1050.2RS	10	0.18	10	32	20	50	8	40	5.5	34.5	20.0	35	21	0.3	0.6	27	14
ZKLFA1050.2Z	10	0.18	10	32	20	50	8	40	5.5	34.5	20.0	35	21	0.3	0.6	27	14
ZKLFA1263.2RS	12	0.30	12	42	25	63	10	53	6.8	46.0	26.5	45	25	0.3	0.6	31	16
ZKLFA1263.2Z	12	0.30	12	42	25	63	10	53	6.8	46.0	26.5	45	25	0.3	0.6	31	16
ZKLFA1563.2RS	15	0.31	15	42	25	63	10	53	6.8	46.0	26.5	45	28	0.3	0.6	34	20
ZKLFA1563.2Z	15	0.31	15	42	25	63	10	53	6.8	46.0	26.5	45	28	0.3	0.6	34	20

The ball cages are made from plastic, permissible operating temperature 120 °C (continuous operation)
[1] Contact angle α = 60°

Table 8.36 **Technical data of angular ball bearing unit ZKLFA**

Type	Shaft diameter [mm]	Mounting bolts DIN912 10.9[1]		Axial load ratings		Permissible speed	Bearing friction torque	Axial rigidity	Resistance to tilting	Recommended lock nut[1]	Tightening torque[1]	Article number
			Number n × t	**C_{dyn} [N]**	**C_0 [N]**	**Grease [rpm]**	**M_{RL} [Nm]**	**c_{aL} [N/µm]**	**c_{kL} [Nm/mrad]**	**Article number**	**M_A [Nm]**	
ZKLFA0630.2Z	6	M3	4	4,900	6,100	14,000	0.01	150	4	HIR06	2	18-000210
ZKLFA0640.2RS	6	M4	4	6,900	8,500	6,800	0.04	200	8	HIR06	2	18-000211
ZKLFA0640.2Z	6	M4	4	6,900	8,500	12,000	0.02	200	8	HIR06	2	18-000212
ZKLFA0850.2RS	8	M5	4	12,500	16,300	5,100	0.08	250	20	HIR08	4	18-000213
ZKLFA0850.2Z	8	M5	4	12,500	16,300	9,500	0.04	250	20	HIR08	4	18-000214
ZKLFA1050.2RS	10	M5	4	13,400	18,800	4,600	0.12	325	25	HIR10	6	18-000215
ZKLFA1050.2Z	10	M5	4	13,400	18,800	8,600	0.06	325	25	HIR10	6	18-000216
ZKLFA1263.2RS	12	M6	4	16,900	24,700	3,800	0.16	375	50	HIR12	8	18-000217
ZKLFA1263.2Z	12	M6	4	16,900	24,700	7,600	0.08	375	50	HIR12	8	18-000218
ZKLFA1563.2RS	15	M6	4	17,900	28,000	3,500	0.20	400	65	HIR15	10	18-000219
ZKLFA1563.2Z	15	M6	4	17,900	28,000	7,000	0.10	400	65	HIR15	10	18-000220

The ball cages are made from plastic, permissible operating temperature 120 °C (continuous operation)
[1] Tightening torque of mounting bolts according to details from manufacturer
Screws according to DIN 912 are not supplied

8.8.2 Angular contact ball bearing ZKLF

- Double-row angular contact ball bearing in O arrangement with 60° contact angle
- Outer ring suitable for flange mounting
- Split inner ring with defined gap for matching of preload
- Lubricated for life for most applications
- Circumferential extraction slot at the outside surface of the outer ring
- Radial and axial lubrication hole M6 each with allen set screw

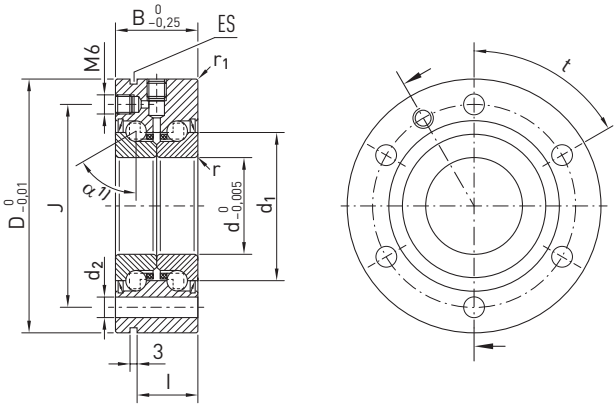

ZKLF... (d ≤ 50)

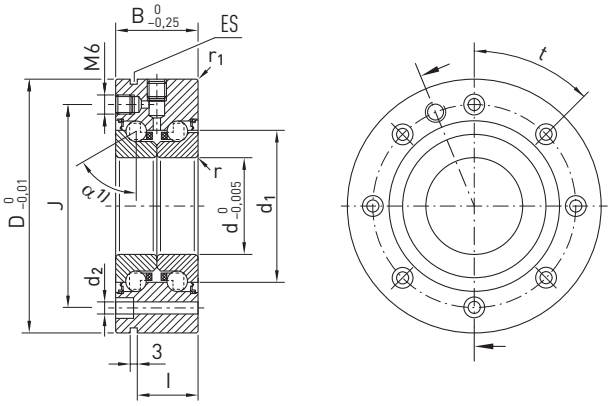

ZKLF...2Z (60 ≤ d ≤ 100)

ES Extraction slot

The ball cages are made from plastic, permissible operating temperature 120 °C (continuous operation)
[1] Contact angle α = 60°

Housing and shaft tolerances ZKLF...2RS/...2Z

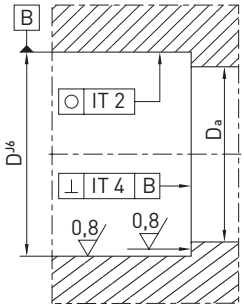

Housing

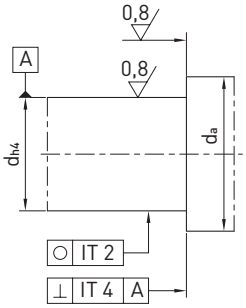

Shaft

Table 8.37 **Dimensions and connecting dimensions for angular ball bearing unit ZKLF**

Type	Shaft diameter [mm]	Weight [kg]	Dimensions [mm]									Connecting dimensions [mm]	
			d	D	B	J	d_2	l	d_1	r_{min}	$r_{1\,min}$	$D_{a\,max}$ 1)	$d_{a\,min}$ 1)
ZKLF1255.2Z-XL	12	0.37	12	55	25	42	6.8	17	25.0	0.3	0.6	33	16
ZKLF1255.2RS-XL	12	0.37	12	55	25	42	6.8	17	25.0	0.3	0.6	33	16
ZKLF1560.2Z-XL	15	0.43	15	60	25	46	6.8	17	28.0	0.3	0.6	35	20
ZKLF1560.2RS-XL	15	0.43	15	60	25	46	6.8	17	28.0	0.3	0.6	35	20
ZKLF1762.2Z-XL	17	0.45	17	62	25	48	6.8	17	30.0	0.3	0.6	37	23
ZKLF1762.2RS-XL	17	0.45	17	62	25	48	6.8	17	30.0	0.3	0.6	37	23
ZKLF2068.2Z-XL	20	0.61	20	68	28	53	6.8	19	34.5	0.3	0.6	43	25
ZKLF2068.2RS-XL	20	0.61	20	68	28	53	6.8	19	34.5	0.3	0.6	43	25
ZKLF2575.2Z-XL	25	0.72	25	75	28	58	6.8	19	40.5	0.3	0.6	48	32
ZKLF2575.2RS-XL	25	0.72	25	75	28	58	6.8	19	40.5	0.3	0.6	48	32
ZKLF3080.2Z-XL	30	0.78	30	80	28	63	6.8	19	45.5	0.3	0.6	53	40
ZKLF3080.2RS-XL	30	0.78	30	80	28	63	6.8	19	45.5	0.3	0.6	53	40
ZKLF30100.2Z-XL	30	1.63	30	100	38	80	8.8	30	51.0	0.3	0.6	64	47
ZKLF30100.2RS-XL	30	1.63	30	100	38	80	8.8	30	51.0	0.3	0.6	64	47
ZKLF3590.2Z-XL	35	1.13	35	90	34	75	8.8	25	52.0	0.3	0.6	62	45
ZKLF3590.2RS-XL	35	1.13	35	90	34	75	8.8	25	52.0	0.3	0.6	62	45
ZKLF40100.2Z-XL	40	1.46	40	100	34	80	8.8	25	58.0	0.3	0.6	67	50
ZKLF40100.2RS-XL	40	1.46	40	100	34	80	8.8	25	58.0	0.3	0.6	67	50
ZKLF40115.2Z-XL	40	2.20	40	115	46	94	8.8	36	65.0	0.6	0.6	80	56
ZKLF40115.2RS-XL	40	2.20	40	115	46	94	8.8	36	65.0	0.6	0.6	80	56
ZKLF50115.2Z-XL	50	1.86	50	115	34	94	8.8	25	72.0	0.3	0.6	82	63
ZKLF50115.2RS-XL	50	1.86	50	115	34	94	8.8	25	72.0	0.3	0.6	82	63
ZKLF50140.2Z-XL	50	4.70	50	140	54	113	11.0	45	80.0	0.6	0.6	98	63
ZKLF50140.2RS-XL	50	4.70	50	140	54	113	11.0	45	80.0	0.6	0.6	98	63
ZKLF60145.2Z-XL	60	4.30	60	145	45	120	8.8	35	85.0	0.6	0.6	100	82
ZKLF70155.2Z-XL	70	4.90	70	155	45	130	8.8	35	95.0	0.6	0.6	110	92
ZKLF80165.2Z-XL	80	5.30	80	165	45	140	8.8	35	105.0	0.6	0.6	120	102
ZKLF90190.2Z-XL	90	8.70	90	190	55	165	11.0	45	120.0	0.6	0.6	138	116
ZKLF100200.2Z-XL	100	9.30	100	200	55	175	11.0	45	132.0	0.6	0.6	150	128

The ball cages are made from plastic, permissible operating temperature 120 °C (continuous operation)
1) Recommended diameter of installation surface

.2Z = Gap seal
.2RS = Contact seal

Table 8.38 **Technical data of angular ball bearing unit ZKLF**

Type	Shaft diameter [mm]	Mounting bolts DIN912 10.9 [1]		Axial load ratings		Permissible speed	Bearing friction torque	Axial rigidity	Resistance to tilting	Recommended lock nut [1]	Tightening torque [1]	Article number
			Quantity n × t	**C_{dyn} [N]**	**C_0 [N]**	**Grease [rpm]**	**M_{RL} [Nm]**	**c_{aL} [N/µm]**	**c_{kL} [Nm/mrad]**	**Article number**	**M_A [Nm]**	
ZKLF1255.2RS-XL	12	M6	3 × 120°	18,600	24,700	3,800	0.16	375	50	HIR12	8	18-000160
ZKLF1560.2Z-XL	15	M6	3 × 120°	19,600	28,000	7,000	0.10	400	65	HIR15	10	18-000165
ZKLF1560.2RS-XL	15	M6	3 × 120°	19,600	28,000	3,500	0.20	400	65	HIR15	10	18-000163
ZKLF1762.2Z-XL	17	M6	3 × 120°	20,700	31,000	6,600	0.12	450	80	HIR17/HIA17	15	18-000169
ZKLF1762.2RS-XL	17	M6	3 × 120°	20,700	31,000	3,300	0.24	450	80	HIR17/HIA17	15	18-000167
ZKLF2068.2Z-XL	20	M6	4 × 90°	28,500	47,000	5,400	0.15	650	140	HIR20/HIA20	18	18-000173
ZKLF2068.2RS-XL	20	M6	4 × 90°	28,500	47,000	3,000	0.30	650	140	HIR20/HIA20	18	18-000171
ZKLF2575.2Z-XL	25	M6	4 × 90°	30,500	55,000	4,700	0.20	750	200	HIR25/HIA25	25	18-000177
ZKLF2575.2RS-XL	25	M6	4 × 90°	30,500	55,000	2,600	0.40	750	200	HIR25/HIA25	25	18-000174
ZKLF3080.2Z-XL	30	M6	6 × 60°	32,000	64,000	4,300	0.25	850	300	HIR30/HIA30	32	18-000182
ZKLF3080.2RS-XL	30	M6	6 × 60°	32,000	64,000	2,200	0.50	850	300	HIR30/HIA30	32	18-000180
ZKLF3590.2Z-XL	35	M8	4 × 90°	45,000	89,000	3,800	0.30	900	400	HIR35/HIA35	40	18-000188
ZKLF3590.2RS-XL	35	M8	4 × 90°	45,000	89,000	2,000	0.60	900	400	HIR35/HIA35	40	18-000185
ZKLF40100.2Z-XL	40	M8	4 × 90°	47,500	101,000	3,300	0.35	1,000	550	HIR40/HIA40	55	18-000192
ZKLF40100.2RS-XL	40	M8	4 × 90°	47,500	101,000	1,800	0.70	1,000	550	HIR40/HIA40	55	18-000190
ZKLF40115.2Z-XL	40	M8	12 × 30°	79,000	149,000	3,100	0.65	1,200	750	HIA40	110	18-000196
ZKLF40115.2RS-XL	40	M8	12 × 30°	79,000	149,000	1,600	1.30	1,200	750	HIA40	110	18-000194
ZKLF50115.2Z-XL	50	M8	6 × 60°	51,000	126,000	3,000	0.45	1,250	1,000	HIR50/HIA50	85	18-000201
ZKLF50115.2RS-XL	50	M8	6 × 60°	51,000	126,000	1,500	0.90	1,250	1,000	HIR50/HIA50	85	18-000198
ZKLF50140.2Z-XL	50	M10	12 × 30°	125,000	250,000	2,500	1.30	1,400	1,500	HIA50	150	18-000204
ZKLF50140.2RS-XL	50	M10	12 × 30°	125,000	250,000	1,200	2.60	1,400	1,500	HIA50	150	18-000203
ZKLF60145.2Z-XL	60	M8	8 × 45°	93,000	214,000	3,000	1.00	1,300	1,650	HIR60/HIA60	100	18-000206
ZKLF70155.2Z-XL	70	M8	8 × 45°	97,000	241,000	2,800	1.20	1,450	2,250	HIR70/HIA70	130	18-000207
ZKLF80165.2Z-XL	80	M8	8 × 45°	100,000	265,000	2,700	1.40	1,600	3,000	HIR80/HIA80	160	18-000208
ZKLF90190.2Z-XL	90	M10	8 × 45°	149,000	395,000	2,300	2.30	1,700	4,400	HIA90	200	18-000209

The ball cages are made from plastic, permissible operating temperature 120 °C (continuous operation)

[1] Tightening torque of mounting bolts according to details from manufacturer.
Screws according to DIN 912 are not supplied

8.8.3 Angular contact ball bearing ZKLN

- Angular contact ball bearing with 60° contact angle
- Split inner ring with defined gap for matching of preload
- High limiting speeds, even with grease lubrication
- Lubricated for life for most applications
- Lubrication groove and three lubrication holes at the outside surface of the outer ring

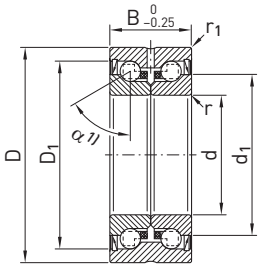

Acting on two sides
Series ZKLN...2RS, ZKLN...2Z

Housing and shaft tolerances ZKLN...2RS/...2Z

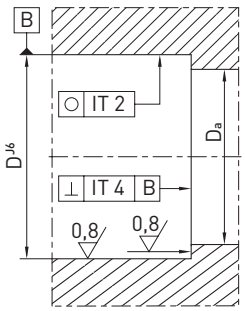

Housing

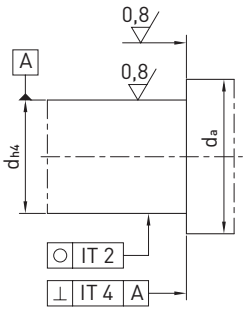

Shaft

Table 8.39 **Dimensions and connecting dimensions for angular ball bearing unit ZKLN**

Type	Shaft diameter [mm]	Weight [kg]	Dimensions [mm]							Connecting dimensions [mm]	
			d 2)	D 3)	B	r_{min}	$r_{1\,min}$	d_1	D_1	$D_{a\,max}$ 4)	$d_{a\,min}$ 4)
ZKLN0619.2Z-XL	6	0.02	6	19	12	0.3	0.3	12.0	16.5	16	9
ZKLN0624.2RS-XL	6	0.03	6	24	15	0.3	0.6	14.0	19.5	19	9
ZKLN0624.2Z-XL	6	0.03	6	24	15	0.3	0.6	14.0	19.5	19	9
ZKLN0832.2RS-XL	8	0.09	8	32	20	0.3	0.6	19.0	26.5	26	11
ZKLN0832.2Z-XL	8	0.09	8	32	20	0.3	0.6	19.0	26.5	26	11
ZKLN1034.2RS-XL	10	0.10	10	34	20	0.3	0.6	21.0	28.5	28	14
ZKLN1034.2Z-XL	10	0.10	10	34	20	0.3	0.6	21.0	28.5	28	14
ZKLN1242.2RS-XL	12	0.20	12	42	25	0.3	0.6	25.0	33.5	33	16
ZKLN1242.2Z-XL	12	0.20	12	42	25	0.3	0.6	25.0	33.5	33	16
ZKLN1545.2RS-XL	15	0.21	15	45	25	0.3	0.6	28.0	36.0	35	20
ZKLN1545.2Z-XL	15	0.21	15	45	25	0.3	0.6	28.0	36.0	35	20
ZKLN1747.2RS-XL	17	0.22	17	47	25	0.3	0.6	30.0	38.0	37	23
ZKLN1747.2Z-XL	17	0.22	17	47	25	0.3	0.6	30.0	38.0	37	23

The ball cages are made from plastic, permissible operating temperature 120 °C (continuous operation)
1) Contact angle α = 60°
2) Hole diameter tolerance as of d = 6 mm: $D^{+0.002}_{-0.003}$; d = 10 – 50 mm: $D^{0}_{-0.005}$; d = 60 – 100 mm: $D^{0}_{-0.008}$
3) Outer diameter tolerance as of d = 6 – 50 mm: $d^{0}_{-0.01}$; d = 60 – 100 mm: $d^{0}_{-0.015}$
4) Recommended diameter of installation surface

.2Z = Gap seal
.2RS = Contact seal

Table 8.39 **Dimensions and connecting dimensions for angular ball bearing unit ZKLN**

Type	Shaft diameter [mm]	Weight [kg]	Dimensions [mm]							Connecting dimensions [mm]	
			d [2]	D [3]	B	r_{min}	$r_{1\,min}$	d_1	D_1	$D_{a\,max}$ [4]	$d_{a\,min}$ [4]
ZKLN2052.2RS-XL	20	0.31	20	52	28	0.3	0.6	34.5	44	43	25
ZKLN2052.2Z-XL	20	0.31	20	52	28	0.3	0.6	34.5	44	43	25
ZKLN2557.2RS-XL	25	0.34	25	57	28	0.3	0.6	40.5	49	48	32
ZKLN2557.2Z-XL	25	0.34	25	57	28	0.3	0.6	40.5	49	48	32
ZKLN3062.2RS-XL	30	0.39	30	62	28	0.3	0.6	45.5	54	53	40
ZKLN3062.2Z-XL	30	0.39	30	62	28	0.3	0.6	45.5	54	53	40
ZKLN3072.2RS-XL	30	0.72	30	72	38	0.3	0.6	51.0	65	64	47
ZKLN3572.2RS-XL	35	0.51	35	72	34	0.3	0.6	52.0	63	62	45
ZKLN3572.2Z-XL	35	0.51	35	72	34	0.3	0.6	52.0	63	62	45
ZKLN4075.2RS-XL	40	0.61	40	75	34	0.3	0.6	58.0	68	67	50
ZKLN4075.2Z-XL	40	0.61	40	75	34	0.3	0.6	58.0	68	67	50
ZKLN4090.2RS-XL	40	0.95	40	90	46	0.6	0.6	65.0	80	80	56
ZKLN4090.2Z-XL	40	0.95	40	90	46	0.6	0.6	65.0	80	80	56
ZKLN5090.2RS-XL	50	0.88	50	90	34	0.3	0.6	72.0	82	82	63
ZKLN5090.2Z-XL	50	0.88	50	90	34	0.3	0.6	72.0	82	82	63
ZKLN50110.2RS-XL	50	2.50	50	110	54	0.6	0.6	80.0	98	98	63
ZKLN50110.2Z-XL	50	2.50	50	110	54	0.6	0.6	80.0	98	98	63
ZKLN60110.2Z-XL	60	2.20	60	110	45	0.6	0.6	85.0	100	100	82
ZKLN70120.2Z-XL	70	2.40	70	120	45	0.6	0.6	95.0	110	110	92

The ball cages are made from plastic, permissible operating temperature 120 °C (continuous operation)

[1] Contact angle α = 60°

[2] Hole diameter tolerance as of d = 6 mm: $d_{-0.003}^{0}$; d = 10 – 50 mm: $d_{-0.005}^{0}$; d = 60 – 100 mm: $d_{-0.008}^{0}$

[3] Outer diameter tolerance as of d = 6 – 50 mm: $D_{-0.01}^{0}$; d = 60 – 100 mm: $D_{-0.015}^{0}$

[4] Recommended diameter of installation surface

.2Z = Gap seal

.2RS = Contact seal

Table 8.40 **Technical data of angular ball bearing unit ZKLN**

Type	Shaft diameter [mm]	Axial load ratings		Permissible speed	Bearing friction torque	Axial rigidity	Resistance to tilting	Recommended lock nut [1]	Tightening torque [1]	Article number
		C_{dyn} [N]	C_0 [N]	Grease [rpm]	M_{RL} [Nm]	c_{aL} [N/µm]	c_{kL} [Nm/mrad]	Article number	M_A [Nm]	
ZKLN0619.2Z-XL	6	5,400	6,100	14,000	0.01	150	4	HIR6	1	18-000222
ZKLN0624.2RS-XL	6	7,600	8,500	6,800	0.04	200	8	HIR6	2	18-000223
ZKLN0624.2Z-XL	6	7,600	8,500	12,000	0.02	200	8	HIR6	2	18-000224
ZKLN0832.2RS-XL	8	13,800	16,300	5,100	0.08	250	20	HIR8	4	18-000225
ZKLN0832.2Z-XL	8	13,800	16,300	9,500	0.04	250	20	HIR8	4	18-000226
ZKLN1034.2RS-XL	10	14,700	18,800	4,600	0.12	325	25	HIR10	6	18-000228
ZKLN1034.2Z-XL	10	14,700	18,800	8,600	0.06	325	25	HIR10	6	18-000230
ZKLN1242.2RS-XL	12	18,600	24,700	3,800	0.16	375	50	HIR12	8	18-000231
ZKLN1242.2Z-XL	12	18,600	24,700	7,600	0.08	375	50	HIR12	8	18-000233
ZKLN1545.2RS-XL	15	19,600	28,000	3,500	0.20	400	65	HIR15	10	18-000234
ZKLN1545.2Z-XL	15	19,600	28,000	7,000	0.10	400	65	HIR15	10	18-000236
ZKLN1747.2RS-XL	17	20,700	31,000	3,300	0.24	450	80	HIR17/HIA17	15	18-000237
ZKLN1747.2Z-XL	17	20,700	31,000	6,600	0.12	450	80	HIR17/HIA17	15	18-000239
ZKLN2052.2RS-XL	20	28,500	47,000	3,000	0.30	650	140	HIR20/HIA20	18	18-000240
ZKLN2052.2Z-XL	20	28,500	47,000	5,400	0.15	650	140	HIR20/HIA20	18	18-000242
ZKLN2557.2RS-XL	25	30,500	55,000	2,600	0.40	750	200	HIR25/HIA25	25	18-000244
ZKLN2557.2Z-XL	25	30,500	55,000	4,700	0.20	750	200	HIR25/HIA25	25	18-000247
ZKLN3062.2RS-XL	30	32,000	64,000	2,200	0.50	850	300	HIR30/HIA30	32	18-000248
ZKLN3062.2Z-XL	30	32,000	64,000	4,300	0.25	850	300	HIR30/HIA30	32	18-000251
ZKLN3072.2RS-XL	30	65,000	108,000	2,100	0.80	950	400	HIA30	65	18-000253
ZKLN3572.2RS-XL	35	45,000	89,000	2,000	0.60	900	400	HIR35/HIA35	40	18-000254
ZKLN3572.2Z-XL	35	45,000	89,000	3,800	0.30	900	400	HIR35/HIA35	40	18-000255
ZKLN4075.2RS-XL	40	47,500	101,000	1,800	0.70	1,000	550	HIR40/HIA40	55	18-000256
ZKLN4075.2Z-XL	40	47,500	101,000	3,300	0.35	1,000	550	HIR40/HIA40	55	18-000258
ZKLN4090.2Z-XL	40	79,000	149,000	3,100	0.65	1,200	750	HIA40	110	18-000259
ZKLN5090.2RS-XL	50	51,000	126,000	1,500	0.90	1,250	1,000	HIR50/HIA50	85	18-000261
ZKLN5090.2Z-XL	50	51,000	126,000	3,000	0.45	1,250	1,000	HIR50/HIA50	85	18-000264
ZKLN50110.2RS-XL	50	125,000	250,000	1,200	2.60	1,400	1,500	HIA50	150	18-000260
ZKLN60110.2Z-XL	60	93,000	214,000	3,000	1.00	1,300	1,650	HIR60/HIA60	100	18-000265
ZKLN70120.2Z-XL	70	97,000	241,000	2,800	1.20	1,450	2,250	HIR70/HIA70	130	18-000266

[1] Lock nuts are not supplied; please order separately!

8.9 HIR lock nuts – radial clamping

Type
- Right-hand thread
- Left-hand thread on request.
- The thread and plane surface are produced in a single clamping process
- Thread quality 4H
- HIR lock nuts can be used several times if used correctly

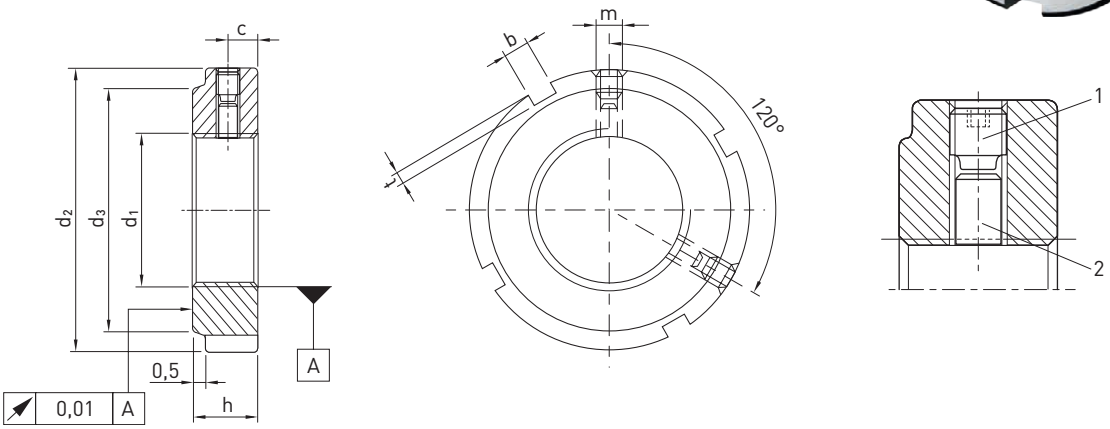

(1) Grub screw, (2) Blocking plug (cut to profile)

Table 8.41 **Dimensions of lock nut HIR**

Type	Thread d_1	d_2	h	b	t	d_3	c	m	Article number
HIR06	M6 × 0.5	16	8	3	2.0	11	4	M4	20-000156
HIR08	M8 × 0.75	16	8	3	2.0	11	4	M4	20-000157
HIR10	M10 × 0.75	18	8	3	2.0	13	4	M4	20-000158
HIR12	M12 × 1	22	8	3	2.0	18	4	M4	20-000160
HIR15	M15 × 1	25	8	3	2.0	21	4	M4	20-000162
HIR17	M17 × 1	28	10	4	2.0	23	5	M5	20-000163
HIR20 × 1	M20 × 1	32	10	4	2.0	27	5	M5	20-000164
HIR20 × 1.5	M20 × 1.5	32	10	4	2.0	27	5	M5	20-000165
HIR25	M25 × 1.5	38	12	5	2.0	33	6	M6	20-000166
HIR30	M30 × 1.5	45	12	5	2.0	40	6	M6	20-000167
HIR35	M35 × 1.5	52	12	5	2.0	47	6	M6	20-000168
HIR40	M40 × 1.5	58	14	6	2.5	52	7	M6	20-000169
HIR45	M45 × 1.5	65	14	6	2.5	59	7	M6	20-000170
HIR50	M50 × 1.5	70	14	6	2.5	64	7	M6	20-000171
HIR55	M55 × 2	75	16	7	3.0	68	8	M6	20-000173
HIR60	M60 × 2	80	16	7	3.0	73	8	M6	20-000174
HIR65	M65 × 2	85	16	7	3.0	78	8	M6	20-000176
HIR70	M70 × 2	92	18	8	3.5	85	9	M8	20-000177
HIR75	M75 × 2	98	18	8	3.5	90	9	M8	20-000179
HIR80	M80 × 2	105	18	8	3.5	95	9	M8	20-000180
HIR85	M85 × 2	110	18	8	3.5	102	9	M8	20-000181
HIR90	M90 × 2	120	20	10	4.0	108	10	M8	20-000192
HIR95	M95 × 2	125	20	10	4.0	113	10	M8	20-000183
HIR100	M100 × 2	130	20	10	4.0	120	10	M8	20-000159

Unit: mm

8.10 HIA lock nuts – axial clamping

Type
- Right-hand thread
- Left-hand thread on request
- The thread and plane surface are produced in a single clamping process
- Thread quality 4H
- HIA lock nuts can be used several times if used correctly

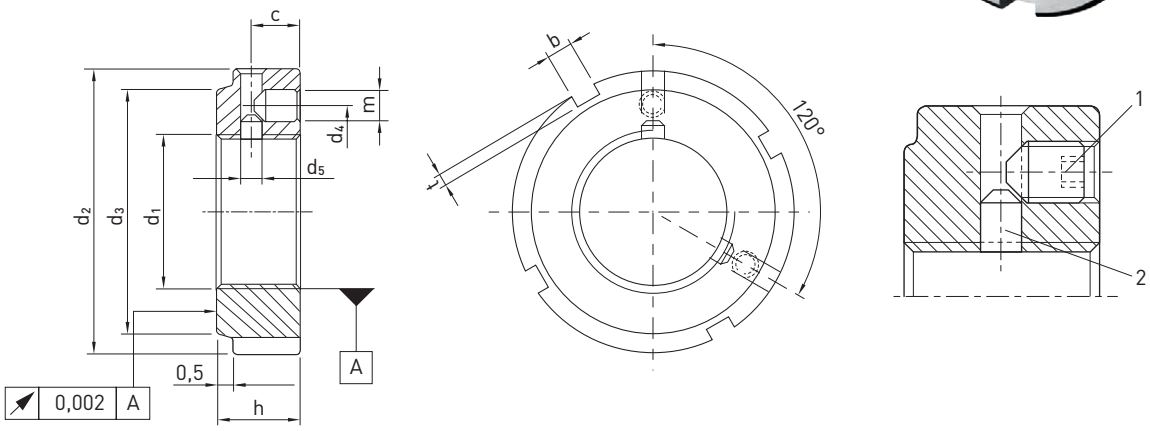

(1) Grub screw, (2) Blocking plug (cut to profile)

Table 8.42 **Dimensions of lock nuts HIA**

Type	Thread d_1	d_2	h	b	t	d_3	d_4	m	Article number
HIA17	M17 × 1	28	16	4	2.0	23	22.5	M4	20-000128
HIA20 × 1	M20 × 1	32	16	4	2.0	27	26.0	M4	20-000129
HIA20 × 1.5	M20 × 1.5	32	16	4	2.0	27	26.0	M4	20-000127
HIA25	M25 × 1.5	38	18	5	2.0	33	31.5	M5	20-000130
HIA30	M30 × 1.5	45	18	5	2.0	40	37.5	M5	20-000131
HIA35	M35 × 1.5	52	18	5	2.0	47	43.5	M5	20-000132
HIA40	M40 × 1.5	58	20	6	2.5	52	49.0	M6	20-000133
HIA45	M45 × 1.5	65	20	6	2.5	59	55.0	M6	20-000134
HIA50	M50 × 1.5	70	20	6	2.5	64	60.0	M6	20-000135
HIA55	M55 × 2	75	22	7	3.0	68	65.0	M6	20-000136
HIA60	M60 × 2	80	22	7	3.0	73	70.0	M6	20-000137
HIA65	M65 × 2	85	22	7	3.0	78	75.0	M6	20-000138
HIA70	M70 × 2	92	24	8	3.5	85	81.0	M8	20-000139
HIA75	M75 × 2	98	24	8	3.5	90	87.0	M8	20-000140
HIA80	M80 × 2	105	24	8	3.5	95	93.0	M8	20-000141
HIA85	M85 × 2	110	24	8	3.5	102	98.0	M8	20-000142
HIA90	M90 × 2	120	26	10	4.0	108	105.0	M8	20-000143
HIA95	M95 × 2	125	26	10	4.0	113	110.0	M8	20-000144
HIA100	M100 × 2	130	26	10	4.0	120	115.0	M8	20-000124

Unit: mm

WE LIVE MOTION

HIWIN GmbH
Brücklesbünd 1
77654 Offenburg
Deutschland
Fon +49 781 93278-0
info@hiwin.de
hiwin.de

All rights reserved.
Complete or partial reproduction
is not permitted without our permission.

Note:
The technical data in this catalogue may
be changed without prior notice.