FOR-1754 Rev.1.1

未注公差/General tolerances(mm)														
0 ~ 3	>3 ~ 6	>6 ~ 10	>10 ~ 18	>18 ~ 30	>30 ~ 50	>50 ~ 80	>80 ~ 120	>120 ~ 180	>180 ~ 250	>250 ~ 315	>315 ~ 400	>400 ~ 500	>500	0.1/10
±0.12	±0.18	±0.22	±0.26	±0.31	±0.37	±0.57	±0.80	±0.93	±1.05	±1.15	±1.60	±2.20	±2.50	±2°

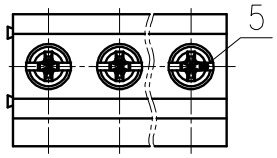

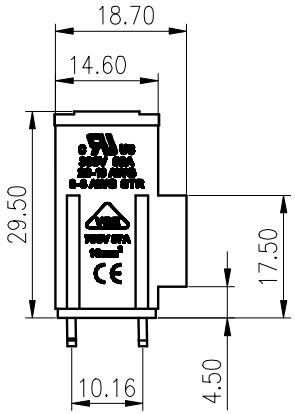

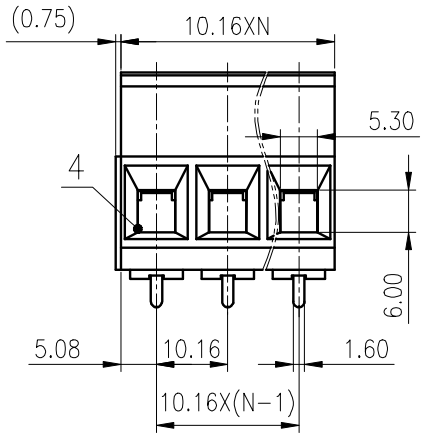

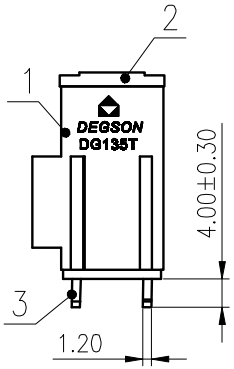

ITEM	NAME OF PART	MATERIAL	NOTES
5	Screw	Steel	M4/Zn Plated
4	Cage	Copper alloy	M4/Ni Plated
3	Pin header	Copper	Sn Plated
2	Cover	PBT	UL94V-0
1	Housing	PBT	UL94V-0

	B	C	D
UL 标准/UL Standard:			
额定电压/电流/Rated Voltage(V)/Current(A)	300/52	300/52	600/5
IEC 标准/IEC Standard:			
过压类别/Overvoltage Category/污染等级/Pollution Degree	Ⅲ/2		
额定电压/电流/Rated Voltage(V)/Current(A)	750/57		
工频耐压/Withstanding voltage(V/1Min)	AC3000		
螺丝扭矩/Torque Tightening(N·m/Lb.in)	M4, 1.2/10.53		
线径范围(硬线和软线)/Wire Range(rigid and flexible)(mm^2/AWG)	4~10/20~6		
间距/Pitch(mm)/线数范围/Poles	10.16/N=2~12P		
剥线长度/Stripping length(mm)	11-12		
使用温度范围/Operating temperature(°C)	-30~+120		
符合RoHS环保要求/Conform to RoHS	Yes		

PCB LAYOUT

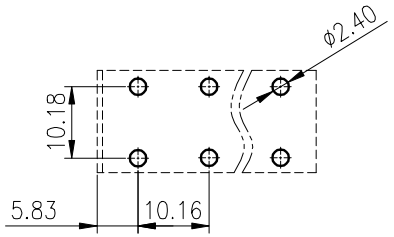

MATERIAL: /		SURFACE: /	
MAT NO.: /	DEGSON®	宁波高松电子有限公司 NINGBO DEGSON ELECTRICAL CO., LTD	
STATUS: /			
APPD: LanChH 2020.05.16	NAME: DG135T-10.16-XXP-1Y-00A(H)		
CHKD: YuJZh 2020.05.16			
DRFT: BaYH 2020.05.16	DRAWING NO.: 10002031	REV	T0
SIZE: A4 mm (inch)	TYPE: CUSTOMER DRAWING	SCALE: 1:1	SHEET 1/1

REV	ECN	DESCRIPTION	DRFT	DATE