RTL

Linear Potentiometer

- Measuring range 30 - 1000 mm
- Oil drain channels
- Special teflon bearing system
- ±%0,05 linearity
- 5 kOhm : 30 - 600 mm
  10 kOhm : 650 - 1000 mm

Technical Specifications

Measurement stroke	30 - 1000 mm
Linearity	<75 mm (± %0,5), 75-129 mm (±%0,2), 130-200 mm (±%0,1), >200 mm (±%0,05)
Repeatability	< 0.01 mm
Resolution	Infinite
Resistance	5 kOhm : 30 - 600 mm 10 kOhm : 650 - 1000 mm
Resistance tolerance	± %20
Load resistance	100 kOhm min.
Recommended wiper current	<1 µA
Permissible applied voltage	28 VDC max.
Electrical connections	4 pin connector
Displacement speed	< 5 m/s
Vibration	EN 60068-2-6 5-2000 Hz 200 m/s² (20g) 2h 30min each axis (x,y,z)
Shock	EN 60068-2-2:2007 500 m/s² (50g) 11ms. (x,y,z axis)
Mechanical life	100 million movement
Case dimensions	33 mm x 33 mm
Case material	Anodized aluminium
Rod material	Stainless steel
Rod diameter	Ø6 mm
Mechanical fixing	Variable brackets
Protection level	IP 65 - EN 60529
Operating temperature	-20°C ... +80°C
Storage temperature	-30°C ... +90°C

Mechanical Specifications

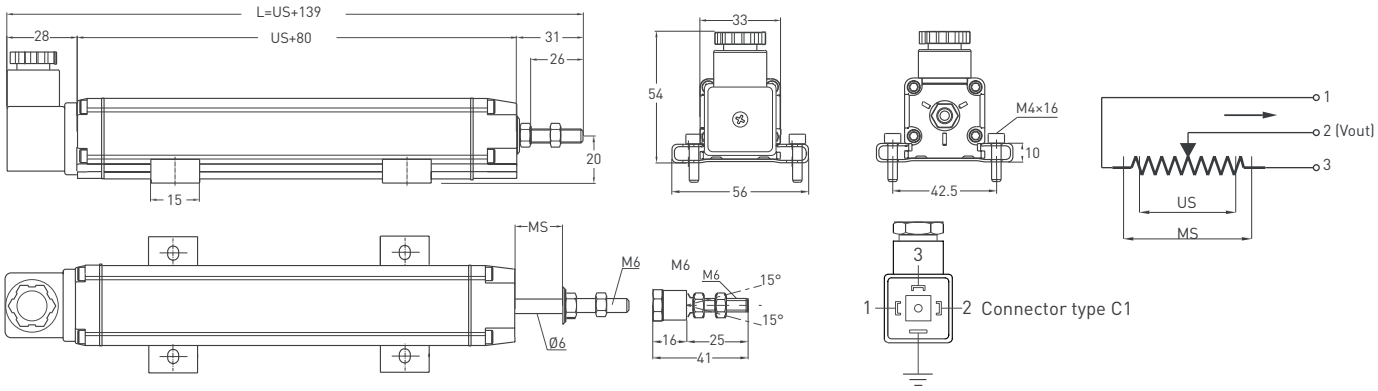

RTL (mm)	30	50	75	100	125	130	150	175	200	225	250	275	300	325	350	375	400	450	500	550	600	650	700	750	800	850	900	1000
US (Usefull stroke)	30	50	75	100	125	130	150	175	200	225	250	275	300	325	350	375	400	450	500	550	600	650	700	750	800	850	900	1000
MS±0,5 (Mechanical stroke)	34	54	79	104	129	134	154	179	204	229	254	279	304	329	354	379	404	454	504	554	604	654	704	754	804	854	904	1004
L (Total stroke)	169	189	214	239	264	269	289	314	339	364	389	414	439	464	489	514	539	589	639	689	739	789	839	889	939	989	1039	1139

Ordering Procedure

Model	Measurement stroke (mm)	Linearity (%)	Resistance (kOhm)	Connector
RTL	500	D	5K	C1
RTL	30 - 1000 mm	A: ±%0.5 (<75 mm), B: ±%0.2 (75 - 129 mm), C: ±%0.1 (130 - 200 mm), D: ±%0.05 (>200 mm)	5K : 5 kOhm (30-600mm) 10K : 10 kOhm (650-1000mm)	C1 : 4 pin connector C5 : Connector

Please note: The specifications and information in this datasheet may not cover all special demands arising from specific applications. Therefore, they do not constitute a comprehensive description of the product properties. OPKON accepts no responsibility for damages resulting from the improper application of our products. The user is responsible for ensuring that the products used are suitable for their own application.