FE A157-4-04660-019-K1484 | Tipping weight 54 - 83 ton

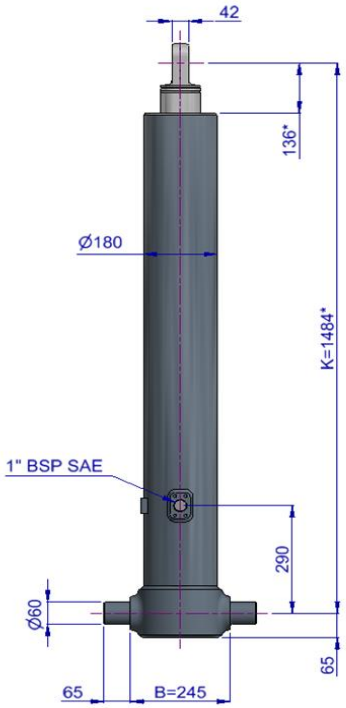

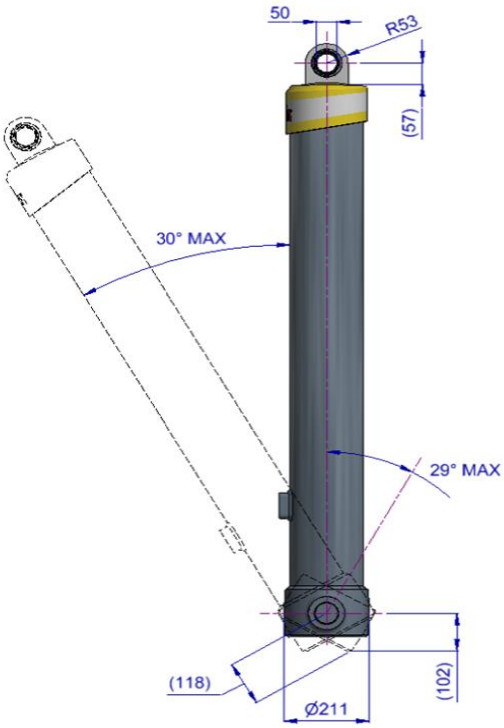

* incl. 20 [-5; +30] mm pull out

3D model is available on request or www.hyva.com

Specifications

Max. working pressure	250 bar
Weight	189 kg
Working volume	61 L
Total volume	67 L
Max. cyl. load (start tipping)	345 kN
Max. cyl. load (end of stroke)[2]	157 kN
Max. cyl. load (end of stroke)[3]	183 kN

Max. pump flow

With KO[1]	190 L/min
Without KO[1]	162 L/min
With KO[1] below -20°C	133 L/min
Without KO[1] below -20°C	113 L/min

Tipping time

With KO[1]	19 sec
Without KO[1]	23 sec
With KO[1] below -20°C	27 sec
Without KO[1] below -20°C	33 sec
Allowable lowering time	19 sec

Technical notes

● This cylinder is a lifting device only. ● It should not be used as a structural member and should not be subjected to side loads. ● Tipping valve must have a pressure relief at the cylinder port set not higher than max. working pressure. ● Verify max. cyl. load. ● Working temperature range is between -40°C and +80°C. ● Max. duration of extension is 0.5 hours (excluded hard chromed stages). ● Cylinder is painted black (RAL9005) with a min. thickness conforming to the 480 hours neutral salt spray test as per ISO 9227. ● [1] Hyva knock-off. ● [2] Unsubstantial unloading (sticky load). ● [3] Substantial unloading.

Related documentation

Bracket options:	015BRA10 & 015BRA13
Mounting instructions:	CYL-0031
Oil specifications:	OIL-0011
Spec sheet explanation:	CYL-0041

Configuration

Extension	1	2	3	4	5	6	7	Total
Effective diameter [mm]	157	137	118	99				4660
Stroke* [mm]	1150	1170	1170	1170				

Tipping weight

For detailed tipping calculations please refer to: https://tipper.hyva.com

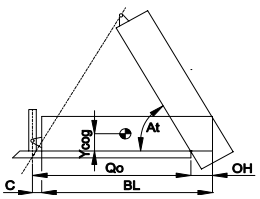

BL	body length
OH	rear overhang
Ycog	vert. pos. centre of gravity
Qo	pivot length
C	bracket length
At	tipping angle
	stroke x 60 / Qo

BL [mm]		6200			6000			5800	
OH [mm]	200	500	800	200	500	800	200	500	800
At [°]	45	48	51	47	50	53	49	52	55
Ycog [mm]									
600	54	60	68	55	62	71	57	64	75
900	58	66	77	60	69	83	63	73	
1200	64	74		67	79		70		

Tipping weight [ton] at maximum pressure of 250 bar for a vertically mounted cylinder and C is 158 mm

Subject to change without notice,
no rights reserved

FE A157-4-04660-019-K1484

Pos.	Part no.	Description	Qty.
C01	71839121	DUST COVER FE 149-4/157-4	1
P01	70433401	PISTON MN3 S 099-1400-HC	1
P02	70209310K	SLIDER MN 099 (2 x 1/2) A22	1
P03	70216099K	OUTER STOPRING MN 099 A22	1
P04	70224099	BOTTOM PLATE PISTON MN 099	1
P05	01770580K	CIRCLIP 90 DIN 472 (95.5x3.5)	1
P06	70260215K	O-RING PISTON BOTTOM 099	1
P07	70235400	PISTON EYE SPH. MN3 099 L=075	1
P08	70260115K	O-RING 82.14 X 3.53 MM	1
P09	71875450K	SPHERICAL BEARING D.50.3 MAINT. FREE	1
P10	01770560K	CIRCLIP 75 DIN 472 (79.5x2.5)	1
P11	71875012	PIN ROUND HEAD GROOVED 8x15 m m	2
S31	70664370	STAGE MN2 118-1360	1
S32	70203118K	PACKSET MN 118	1
S33	70209320K	SLIDER MN 118 (2 x 1/2) A22	1
S34	70216118K	OUTER STOPRING MN 118 A22	1
S35	70217118K	LIFTRING MN 118 A22	1
S21	70665370	STAGE MN2 137-1360	1
S22	70203137K	PACKSET MN 137	1
S23	70207137K	SLIDER MN 137 A35	1
S24	70216137K	OUTER STOPRING MN 137 A22	1
S25	70217137K	LIFTRING MN 137 A22	1
S11	70666370	STAGE MN2 157-1360	1
S12	70203157K	PACKSET MN 157	1
S13	70207157K	SLIDER MN 157 A35	1
S14	70216157K	OUTER STOPRING MN 157 A22	1
S15	70213157K	LIFTRING MN 157x5 MK2	1
B01	70367374	BASE MN2 179-1403-4/4BSAE-290	1
B02	70203179K	PACKSET MN 179	1
B03	70225360	BOTTOM PLATE MN2 179	1
B04	70270179K	SEAL BOTTOM PLATE MN 179	1
B05	70220185	LOCKING PLATE MN2 179	3
B06	01732055K	BOLT HEX M8X20X1.25 SET 6 PCS	1
B07	01732559K	WASHER SPRING M8 SET 6 PCS	1

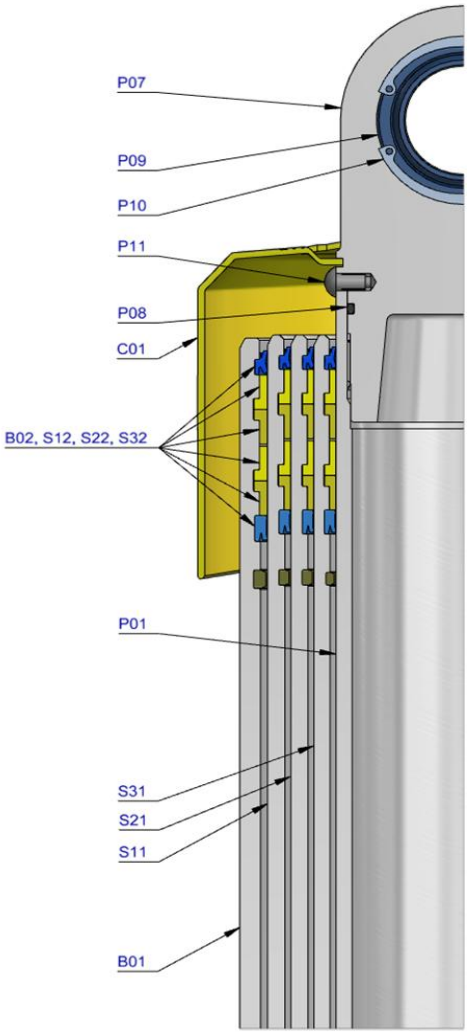

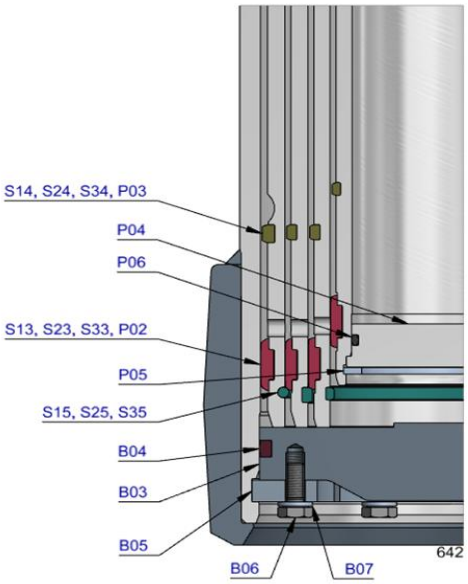

Seal kit complete

71907640K	Consists of all packsets with packset grease and O-rings

Notes

The inner stopring and piston bottom are pre-mounted on spare bases, stage and pistons. Therefore, when ordering new tubes, it is not required to order these parts separately.

For repair instructions see: CYL-0040. Serial no. is located on type plate and near type plate support.

Subject to change without notice,
no rights reserved