ENGLISH

EasySolar-II GX - Product Manual

24/3000/70-32, 48/3000/35-32, 48/5000/70-50

Rev. 11 - 04/2023

Table of Contents

1. Introduction **1**

2. Safe Installation **2**
2.1. Transport and storage 2
2.2. Grounding 2

3. Product Description **4**
3.1. Features applying to all applications 4
3.1.1. GX LCD display 4
3.1.2. BMS-Can Connections 4
3.1.3. Ethernet and WiFi 4
3.1.4. Automatic and uninterruptible switching 4
3.1.5. Two AC outputs 4
3.1.6. Three phase capability 4
3.1.7. PowerControl – maximum use of limited AC power 4
3.1.8. PowerAssist – Extended use of generator or shore current 4
3.1.9. Programmable 4
3.1.10. Programmable relay 4
3.1.11. External current transformer (option) 5
3.1.12. Programmable analog/digital input/output ports (Aux in 1 and Aux in 2, see appendix) 5
3.2. Features specific on-grid and off-grid systems combined with PV 5
3.2.1. External current transformer (optional) 5
3.2.2. Frequency shift 5
3.2.3. Built-in Battery Monitor 5
3.2.4. Autonomous operation when the grid fails 5
3.3. Battery charger 5
3.3.1. Lead-acid batteries 5
3.3.2. Li-ion batteries 6
3.3.3. Other Li-ion batteries 6
3.3.4. More on batteries and battery charging 6
3.4. ESS – Energy Storage Systems: feeding energy back into the grid 6

4. Operation **8**
4.1. On/Off/Charger Only Switch 8

5. GX LCD Interface **9**
5.1. On/off behaviour 9
5.2. Push button behaviour 9
5.3. Information displayed 9
5.4. Error Code Display 9

6. PV array design **10**
6.1. Sizing the array 10

7. Accessing Connection Points **11**

8. Installation **12**
8.1. Location 12
8.2. Connection of battery cables 12
8.3. Battery Connection Procedure 12
8.4. Connection of the PV array 13
8.5. Connection of the AC cabling 14
8.6. Optional Connections 15
8.6.1. Remote Control 15
8.6.2. Programmable relay 15
8.6.3. Programmable analog/digital input/output ports 15
8.6.4. Voltage sense (connection terminal J, see Appendix A) 15
8.6.5. Temperature sensor (connection terminal J, see Appendix A) 15
8.6.6. Parallel Connection 15
8.6.7. Three-phase operation 16

8.6.8. Connection to the VRM Portal 16
8.7. Firmware updates 16
8.7.1. Changelog 16
8.7.2. Via internet or with microSD-card/USB-stick 16
8.7.3. Revert to a previous firmware version 17

9. Configuration 19
9.1. Standard settings: ready for use 19
9.2. Explanation of settings 20
9.2.1. Equalisation 21
9.3. Inverter/Charger 22
9.4. SmartSolar MPPT 250/70 charge controller 22

10. Maintenance 23

11. Error Indications 24
11.1. General error indications 24
11.2. VE.Bus error codes 25

12. Technical Specifications 27
12.1. Inverter/Charger 27
12.2. SmartSolar MPPT Charge Controller 27
12.3. General 28
12.4. GX Device 29

13. Internal Topography 31

14. Appendix 33
14.1. Appendix A: Connection Overview 33
14.2. Appendix B: Block Diagram 34
14.3. Appendix C: Parallel Connections 35
14.4. Appendix D: Three Phase Connections 35
14.5. Appendix E: Charge Characteristic 36
14.5.1. 4-stage charging: 36
14.5.2. Battery Safe 36
14.5.3. Absorption 36
14.5.4. Float 36
14.5.5. Storage 36
14.6. Appendix F: Temperature Compensation 37
14.7. Appendix G: Dimensions 37

1. Introduction

The Victron EasySolar-II GX integrates the following elements:

- A powerful MultiPlus-II inverter/charger
- A SmartSolar MPPT solar charge controller
- A GX device with a 2x 16 character display

These elements come prewired, and preconfigured together inside a single unit. This greatly simplifies most installations, saving time and money.

This document explains how all components fit together, how to install the product, and what documentation to use for configuration and other details of its individual parts.

This document explains:

- Features
- Behaviour
- Specifications
- Limitations
- Installation instructions
- Troubleshooting steps

You must read it to understand how to use your product safely and reliably.

This manual applies to:

- EasySolar-II GX 24/3000/70-32
- EasySolar-II GX 48/3000/35-32
- EasySolar-II GX 48/5000/70-50

2. Safe Installation

Please read the documentation supplied with this product first, so that you are familiar with the safety signs and directions before using the product. This product is designed and tested in accordance with international standards. The product should be used for the designated application only.

DANGER OF ELECTRICAL SHOCK

The product is used in combination with a permanent energy source (battery). Even if the product is switched off, a dangerous electrical voltage can occur at the input and/or output terminals. Always switch the AC power off and disconnect the battery before performing maintenance. When the photovoltaic array is exposed to light, it supplies a dangerous high DC voltage to the inverter. Cover the solar panels or disconnect them.

The product contains no internal user-serviceable parts. Do not remove the front panel and do not put the product into operation unless all panels are fitted. All maintenance should be performed by qualified personnel.

Never use the product at sites where gas or dust explosions could occur. Refer to the specifications provided by the manufacturer of the battery to ensure that the battery is suitable for use with this product. The battery manufacturer's safety instructions should always be observed.

This product is not intended for use by persons (including children) with reduced physical, sensory or mental capabilities, or lack of experience and knowledge, unless they have been given supervision or instruction concerning use of the product by a person responsible for their safety. Children should be supervised to ensure that they do not play with the product.

Do not lift heavy objects unassisted

2.1. Transport and storage

On storage or transport of the product, ensure that the mains supply and battery leads are disconnected.

No liability can be accepted for damage in transit if the equipment is not transported in its original packaging.

Store the product in a dry environment; the storage temperature should range from –20°C to 60°C.

Refer to the battery manufacturer's manual for information on transport, storage, charging, recharging and disposal of the battery.

Protect the solar modules from incident light during installation, e.g. cover them.

Never touch uninsulated cable ends.

Use only insulated tools.

2.2. Grounding

Battery grounding: this device must be installed in a negative grounded system.

Note: apply a single ground connection (preferably close to the battery) to prevent malfunctioning of the system.

- Chassis grounding: A separate earth path for the chassis ground is permitted because it is isolated from the positive and negative terminal.
- The USA National Electrical Code (NEC) requires the use of an external ground fault protection device (GFPD). These MPPT chargers do not have internal ground fault protection. The system electrical negative should be bonded through a GFPD to earth ground at one (and only one) location.
- The charger must not be connected with grounded PV arrays. (one ground connection only)
- The positive and negative of the PV array should not be grounded. Ground the frame of the PV panels to reduce the impact of lightning.

**WHEN A GROUND FAULT IS INDICATED, BATTERY TERMINALS AND CONNECTED CIRCUITS MAY BE UNGROUNDED AND HAZARDOUS.

3. Product Description

The basis of the product is an extremely powerful sine inverter, battery charger and transfer switch in a compact casing. It is suited for use in Marine, Automotive, as well as stationary land-based applications.

3.1. Features applying to all applications

3.1.1. GX LCD display

A backlit 2 x 16 character display screen shows system parameters.

3.1.2. BMS-Can Connections

The BMS-Can connection allows connecting of compatible 500 kbps CAN-bus BMS batteries. VE.Can products as for example Victron MPPT Solar Chargers, or a Lynx Shunt VE.Can are NOT supported.

3.1.3. Ethernet and WiFi

Ethernet and WiFi connections allow for local and remote system monitoring, as well as connection to Victron's free VRM portal for long term system performance information.

3.1.4. Automatic and uninterruptible switching

Houses or buildings with solar panels or a combined micro-scale heating and power plant or other sustainable energy sources have a potential autonomous energy supply which can be used for powering essential equipment (central heating pumps, refrigerators, deep freeze units, Internet connections, etc.) during a power failure. A problem is however that grid connected sustainable energy sources drop out as soon as the grid fails. With the product and batteries, this problem can be solved: **the product can replace the grid during a power failure**. When the sustainable energy sources produce more power than needed, the product will use the surplus to charge the batteries; in the event of a shortfall, the product will supply additional power from the battery.

3.1.5. Two AC outputs

Besides the usual uninterruptible output (AC-out-1), an auxiliary output (AC-out-2) is available that disconnects its load in the event of battery-only operation. Example: an electric boiler that is allowed to operate only if the AC input is available. There are several applications for AC-out-2.

3.1.6. Three phase capability

The unit can be connected with others and configured for three-phase output. It is possible connect up to 6 sets in parallel in three phases, to a total of 18 units.

3.1.7. PowerControl – maximum use of limited AC power

The product can supply a huge charging current. This implies heavy loading of the AC input. Therefore a maximum current can be set. The product then takes other power users into account, and only uses 'surplus' current for charging purposes.

3.1.8. PowerAssist – Extended use of generator or shore current

This feature takes the principle of PowerControl to a further dimension allowing the product to supplement the capacity of the alternative source. Where peak power is often required only for a limited period, the product will make sure that insufficient AC input power is immediately compensated for by power from the battery. When the load reduces, the spare power is used to recharge the battery.

3.1.9. Programmable

All settings can be changed with a PC and free of charge software, downloadable from our website www.victronenergy.com. See this manual for more information - https://www.victronenergy.com/media/pg/VEConfigure_Manual/en/index-en.html

3.1.10. Programmable relay

The product is equipped with a programmable relay. The relay can be programmed for different applications, for example as a starter relay.

3.1.11. External current transformer (option)

External current transformer option to implement PowerControl and PowerAssist with external current sensing

3.1.12. Programmable analog/digital input/output ports (Aux in 1 and Aux in 2, see appendix)

The product is equipped with 2 analog/digital input/output ports.

These ports can be used for several purposes. One application is communication with the allow-to-charge and allow-to-discharge BMS controls of a lithium-ion battery.

3.2. Features specific on-grid and off-grid systems combined with PV

3.2.1. External current transformer (optional)

When used in a grid-parallel topology the internal current transformer cannot measure the current to or from the mains. In this case an external current transformer has to be used. See appendix A. Contact your Victron Distributor for further information about this installation type

3.2.2. Frequency shift

When solar inverters are connected to the AC-output of the product, excess solar energy is used to recharge the batteries. Once the absorption voltage is reached, charge current will reduce and excess energy will be fed back into the mains. If the mains is not available, the product will slightly increase the AC frequency to reduce the output of the solar inverter.

3.2.3. Built-in Battery Monitor

The ideal solution when the product is part of a hybrid system (AC input, inverter/chargers, storage battery, and alternative energy). The built-in battery monitor can be set to open and close the relay:

- start at a preset % discharge level
- start (with a preset delay) at a preset battery voltage
- start (with a preset delay) at a preset load level
- stop at a preset battery voltage
- stop (with a preset delay) after the bulk charge phase has been completed
- stop (with a preset delay) at a preset load level

3.2.4. Autonomous operation when the grid fails

Houses or buildings with solar panels or a combined micro-scale heating and power plant or other sustainable energy sources have a potential autonomous energy supply which can be used for powering essential equipment (central heating pumps, refrigerators, deep freeze units, Internet connections, etc.) during a power failure. A problem is however that grid connected sustainable energy sources drop out as soon as the grid fails. With the product and batteries, this problem can be solved: **the product can replace the grid during a power failure**. When the sustainable energy sources produce more power than needed, the product will use the surplus to charge the batteries; in the event of a shortfall, the product will supply additional power from the battery.

3.3. Battery charger

3.3.1. Lead-acid batteries

Adaptive 4-stage charge algorithm: bulk – absorption – float – storage

The microprocessor-driven adaptive battery management system can be adjusted for various types of batteries. The adaptive function automatically adapts the charging process to battery use.

The right amount of charge: variable absorption time

In the event of slight battery discharge, absorption is kept short to prevent overcharging and excessive gas formation. After deep discharging, the absorption time is automatically extended in order to fully charge the battery.

Preventing damage due to excessive gassing: the BatterySafe mode

If, in order to quickly charge a battery, a high charge current in combination with a high absorption voltage has been chosen, damage due to excessive gassing will be prevented by automatically limiting the rate of voltage increase once the gassing voltage has been reached.

Less maintenance and aging when the battery is not in use: the Storage mode

The Storage mode kicks in whenever the battery has not been subjected to discharge during 24 hours. In the Storage mode float voltage is reduced to 2,2V/cell to minimise gassing and corrosion of the positive plates. Once a week the voltage is raised back to the absorption level to 'equalize' the battery. This feature prevents stratification of the electrolyte and sulphation, a major cause of early battery failure.

Battery voltage sense: the correct charge voltage

Voltage loss due to cable resistance can be compensated by using the voltage sense facility to measure voltage directly on the DC bus or on the battery terminals.

Battery voltage and temperature compensation

The temperature sensor (supplied with the product) serves to reduce charging voltage when battery temperature rises. This is particularly important for maintenance-free batteries, which could otherwise dry out by overcharging.

3.3.2. Li-ion batteries

Victron LiFePO4 Smart batteries

Use the VE.Bus BMS

3.3.3. Other Li-ion batteries

Please see https://www.victronenergy.com/live/battery_compatibility:start

3.3.4. More on batteries and battery charging

Our book 'Energy Unlimited' offers further information on batteries and battery charging, and is available free of charge on our website: https://www.victronenergy.com/support-and-downloads/technical-information.

For more information on adaptive charging, please also refer to the General Technical Information on our website.

3.4. ESS – Energy Storage Systems: feeding energy back into the grid

When the product is used in a configuration in which it will feed back energy into the grid it is required to enable grid code compliance by selecting the appropriate grid code country setting with the VEConfigure tool.

Once set, a password will be required to disable grid code compliance or change grid code related parameters. Contact your Victron Distributor if you require this password.

Depending on the grid code, there are several reactive Power control modes;

- Fixed cos φ
- Cos φ as a function of P
- Fixed Q
- Q as a function of input voltage

Figure 1.

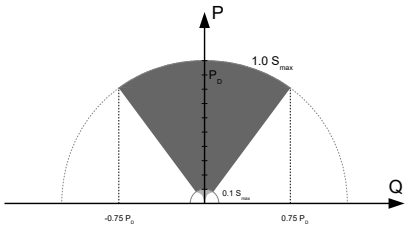

Reactive Power capability

If the local grid code is not supported by the product an external certified interface device should be used to connect the product to the grid.

The product can also be used as a bidirectional inverter operating parallel to the grid, integrated into a customer designed system (PLC or other) that takes care of the control-loop and grid measurement,

Special note regarding NRS-097 (South Africa)

1. The maximum allowed impedance of the network is 0.28Ω + j0.18Ω

2. The inverter is fulfilling the unbalance requirement in case of multiple single phase units only when a GX device is part of the installation.

Special notes regarding AS 4777.2 (Australia/New Zealand)

1. In installation where the continuity of the neutral to the load may not be interrupted, the installer must place a wire between AC-in N and AC-out N. Additionally gride code “Australia X: AS/NZS 4777.2:2020 stand alone app. M (with N-bypass)” must be chosen. In this case the Earth relay is ground relay remains open and in pass through mode the internal neutral relay will not be operated.

4. Operation

4.1. On/Off/Charger Only Switch

The switch is located on the underside to the bottom right of the product.

The switch has three positions. The centre position 0 is Off. The I position is On, and the II position is Charger Only.

When switched to 'I / On' (rocked towards the front of the unit), the product will come into operation and the inverter is fully functional.

If an AC voltage is connected to the 'AC in' terminal, it will be switched through to the 'AC out' terminal, if within specifications. The inverter will switch off, and the charger commences charging. 'Bulk', 'Absorption' or 'Float' will display, depending on the charger mode.

If the voltage at the 'AC-in' terminal is rejected, the inverter will switch on.

When the switch is switched to 'II / Charger Only', only the battery charger of the Multi will operate (if mains voltage is present). In this mode input voltage also is switched through to the 'AC out' terminal.

NOTE: When only the charger function is required, ensure that the switch is switched to 'II / Charger Only'. This prevents the inverter from being switched on if the mains voltage is lost, thus preventing your batteries from running flat.

5. GX LCD Interface

The display screen will present useful information about your system.

5.1. On/off behaviour

When the product is switched off with the physical switch on the device or with the Remote On/Off terminals, then the GX card is off as well. If you switch the product remotely, using a Digital Multi Control, then the GX card will remain powered. Also when switching the inverter/charger off from within the GX menus, the GX card will remain powered.

Lastly, when the inverter/charger switches itself off due to an alarm, such as low battery or overtemperature, then the GX card will remain powered and functional as well.

5.2. Push button behaviour

When the GX Card is on, pushing the button beside the screen will increase the brightness of the backlight. The backlight will dim itself again after 5 minutes.

Once the backlight has been activated, pushing the button again will cycle through the available display options. Some options will be displayed automatically, and others require a button push to display.

5.3. Information displayed

- Solar Power, Voltage and Charge state (if connected)
- ESS/DVCC reason codes (if active)
- Solar Daily Yield
- Inverter/charger charge state (eg Bulk, ESS)
- Battery State of Charge, Power and Voltage
- Network IP Address and Connection Type (if connected).
- AC input and output Power

In a system with more than one phase, there will be additional AC input and output information available, eg

- Phase 1 AC input Voltage and Power.
- Phase 1 AC output Voltage and Power
- Phase 2 AC input Voltage and Power.
- Phase 2 AC output Voltage and Power.
- Phase 3 AC input Voltage and Power.
- Phase 3 AC output Voltage and Power.

5.4. Error Code Display

If there is an error with the system, the error code will be displayed on the screen. The screen will display VE.Bus error code numbers, and MPPT error codes (if connected).

Basic information about the VE.Bus Error codes are in the Error Indications section.

For further details about the error codes please see:

VE.Bus Error Codes

MPPT Error Codes

The error will display until it is cleared.

6. PV array design

6.1. Sizing the array

We recommend to use the MPPT Sizing Calculator available on our website

- The solar charge controller will operate only if the PV voltage exceeds battery voltage (Vbat).
- PV voltage must exceed Vbat + 5V for the controller to start. Thereafter minimum PV voltage is Vbat + 1V.
- Maximum PV Array open circuit voltage is 250V.
- Maximum PV Array short circuit current is 35A.

For example:

- Minimum number of cells in series: 144 (4x 12V panel or 2x 24V panel in series).
- Maximum: 360 cells (10x 12V or 5x 24 panel in series).

Remark: at low temperature, the open circuit voltage of a 360 cell array may exceed 250V, depending on local conditions and cell specifications. In that case, the number of cells in series must be reduced.

The MPPT component of the EasySolar-II GX is pre-programed to match the nominal battery voltage requirements of the included inverter/charger. Specific battery voltage charging parameters may need to be programmed in addition to the inverter/charger voltage parameters.

7. Accessing Connection Points

All electrical connections can be accessed by removing the bottom plate. See below photos of the 3K and 5K EasySolar-II GX with the bottom plate removed.

8. Installation

This product contains potentially dangerous voltages. It should only be installed under the supervision of a suitable qualified installer with the appropriate training, and subject to local requirements. Please contact Victron Energy for further information or necessary training

8.1. Location

The product must be installed in a dry and well-ventilated area, as close as possible to the batteries. There should be a clear space of at least 10 cm around the product for cooling.

Excessively high ambient temperature will result in the following:

- Reduced service life.
- Reduced charging current.
- Reduced peak capacity, or shutdown of the inverter. Never position the appliance directly above the batteries.

This product is suitable for wall mounting. A solid surface, suitable for the weight and dimensions of the product must be available (e.g., concrete, or masonry). For mounting purposes, a hook and two holes are provided at the back of the casing (see appendix G). The device can be fitted either horizontally or vertically. For optimal cooling, vertical fitting is preferred.

The interior of the product must remain accessible after installation.

Try and keep the distance between the product and the battery to a minimum in order to minimize cable voltage losses.

For safety purposes, this product should be installed in a heat-resistant environment. You should prevent the presence of e.g. chemicals, synthetic components, curtains or other textiles, etc., in the immediate vicinity.

8.2. Connection of battery cables

In order to utilize the full capacity of the product, batteries with sufficient capacity and battery cables with sufficient cross section should be used. See table.

	24/3000/70	48/3000/35	48/5000/70
Recommended battery capacity (Ah)	200-800	100–400	200-800
Recommended DC fuse	300 A	125 A	200 A
Recommended cross section (mm²) per + and - connection terminal			
0 – 5 m	50 mm²	35 mm²	70 mm²
5 – 10 m	95 mm²	70 mm²	2x70 mm²

Remark: Internal resistance is the important factor when working with low capacity batteries. Please consult your supplier or the relevant sections of our book 'Energy Unlimited', downloadable from our website.

8.3. Battery Connection Procedure

Proceed as follows to connect the battery cables:

Use a torque wrench with insulated box spanner in order to avoid shorting the battery. Avoid shorting the battery cables.

Specific care and attention must be taken when making the battery connections. Correct polarity must be confirmed with a multimeter before connection. Connecting a battery with incorrect polarity will destroy the device and is not covered by warranty.

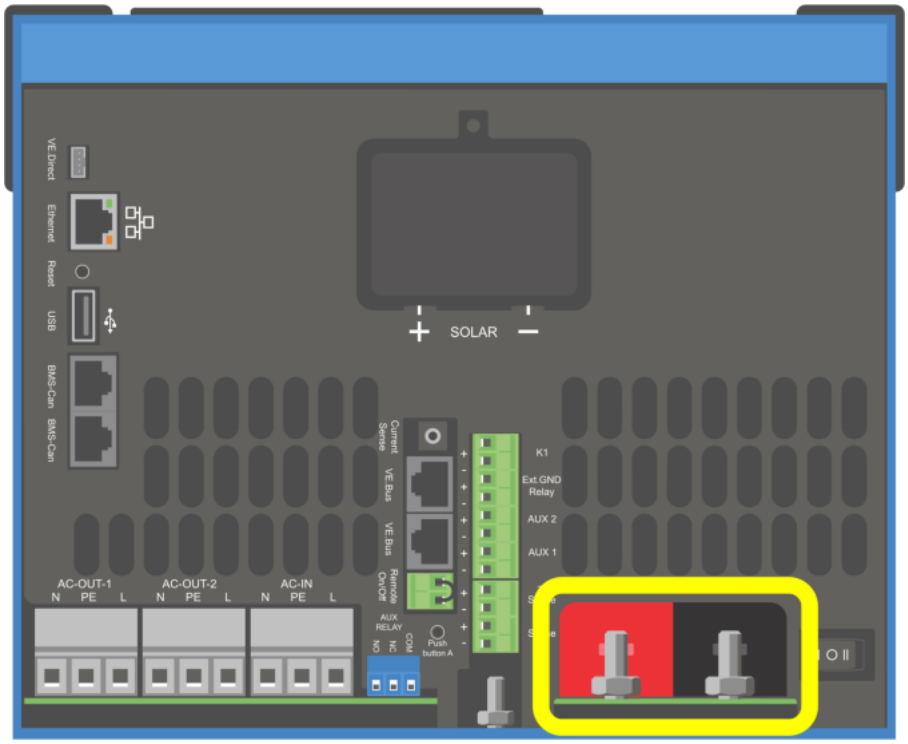

- Connect the battery cables. First the - cable then the +. Be aware that there may be a spark when making the battery connections.
- Tighten the nuts to the prescribed torques for minimal contact resistance.

8.4. Connection of the PV array

1. Confirm correct PV polarity
2. Remove the Solar connection cover
3. Connect the solar array to the M6 solar bolts.

NOTE: if connected with reverse polarity, the PV voltage will drop, the controller will heat up but will not charge the battery.

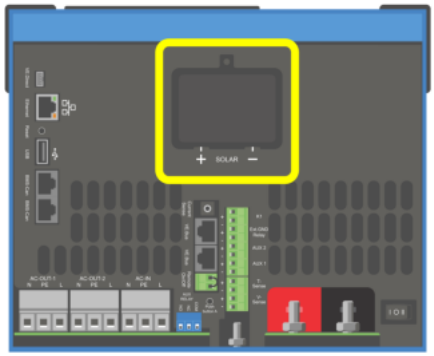

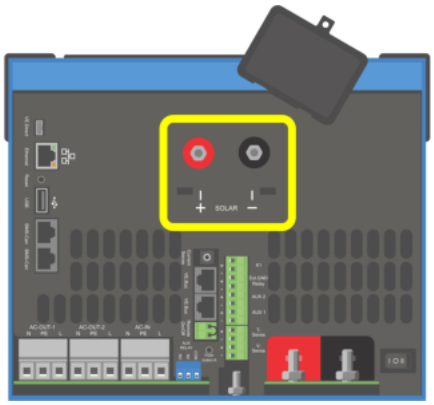

8.5. Connection of the AC cabling

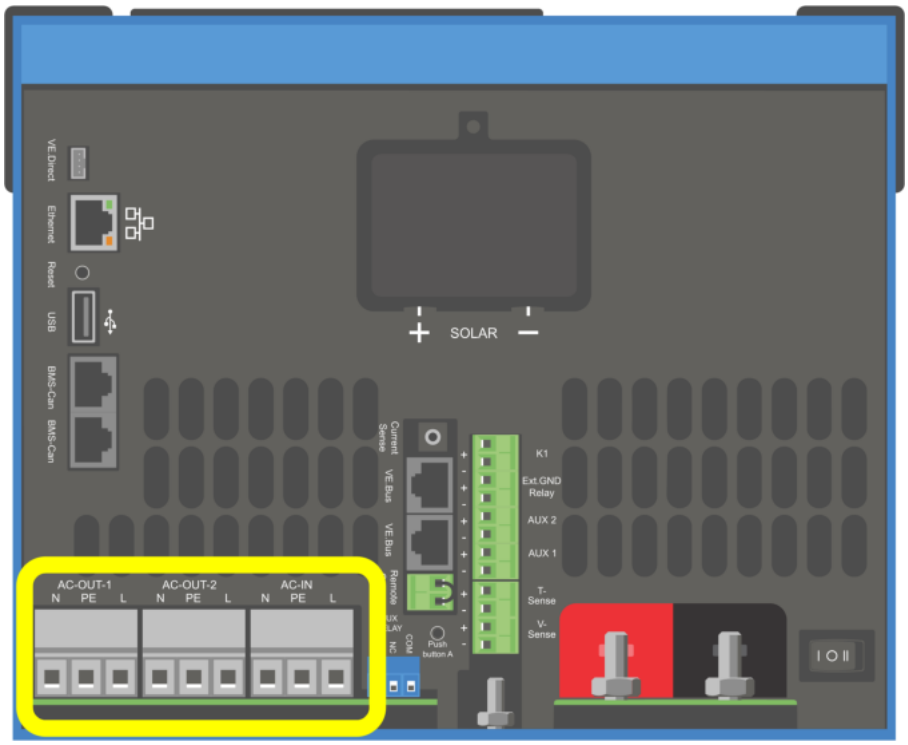

This product is a safety class I device, intended for a TN system (supplied with a ground terminal for safety purposes). **Its AC input and/or output terminals must be provided with uninterruptible grounding for safety purposes.**

High leakage current, the additional grounding point must be used with minimum 10mm^2 wire. See appendix A

This product is provided with a ground relay (relay H, see Appendix B) that **automatically connects the Neutral output to the chassis if no external AC supply is available**. If an external AC supply is provided, the ground relay H will open before the input safety relay closes. This ensures the correct operation of an earth leakage circuit breaker that is connected to the output. As the unit is isolated from the DC and therefore a DC leakage current is not possible, any RCD is useable.

In a mobile installation (for example, with a shore current plug), interrupting the shore connection will simultaneously disconnect the grounding connection. In that case, the casing must be connected to the chassis (of the vehicle) or to the hull or grounding plate (of the boat). In case of a boat, direct connection to the shore ground is not recommended because of potential galvanic corrosion. The solution to this is using an isolation transformer.

The terminal blocks can be found on the printed circuit board, see Appendix A.

Do not invert neutral and phase when connecting the AC.

- **AC-in** The AC input cable can be connected to the terminal block 'AC–in'. From left to right: "N" (neutral), "PE" (earth) and "L" (phase) **The AC input must be protected by a fuse or magnetic circuit breaker rated at 32A or less, and cable cross-section must be sized accordingly**. If the input AC supply is rated at a lower value, the fuse or magnetic circuit breaker should be down sized accordingly. The cross section of the of the earth connector should be at least the same size of the AC conductors.

- **AC-out-1** The AC output cable can be connected directly to the terminal block 'AC-out'. From left to right: "N" (neutral), "PE" (earth) and "L" (phase) With its PowerAssist feature the Multi can add up to its rated power (e.g 3000 / 230 = 13A) to the output during periods of peak power requirement. Together with a maximum input current of 32A this means that the output can supply up to 32 + 13 = 45 A. An earth leakage circuit breaker and a fuse or circuit breaker rated to support the expected load must be included in series with the output, and cable cross-section must be sized accordingly.

- **AC-out-2** A second output is available that disconnects its load in the event of battery operation. On these terminals, equipment is connected that may only operate if AC voltage is available on AC-in-1, e.g. an electric boiler or an air conditioner. The load on AC-out-2 is disconnected immediately when the inverter/charger switches to battery operation. After AC power becomes available on AC-in-1, the load on AC-out-2 will be reconnected with a delay of approximately 2 minutes. This to allow a genset to stabilise.

8.6. Optional Connections

A number of optional connections are possible:

8.6.1. Remote Control

The product can be remotely controlled in two ways.

- With an external switch (connection terminal M, see Appendix A). Operates only if the switch on the device is set to "on".
- With a Digital Multi Control panel (connected to one of the two RJ45 sockets L, see Appendix A). Operates only if the switch on the device is set to "on"

The Digital Multi Control panel has a rotary knob with which the maximum current of the AC input can be set: see PowerControl and PowerAssist.

8.6.2. Programmable relay

The relay can be programmed for all kinds of other applications, for example as a starter relay for a generator.

8.6.3. Programmable analog/digital input/output ports

The product is equipped with 2 analog/digital input/output ports.

These ports can be used for several purposes. One application is communication with the allow-to-charge and allow-to-discharge BMS controls of a lithium-ion battery.

8.6.4. Voltage sense (connection terminal J, see Appendix A)

For compensating possible cable losses during charging, two sense wires can be connected with which the voltage directly on the battery or on the positive and negative distribution points can be measured. Use wire with a cross-section of 0,75mm².

During battery charging, the inverter/charger will compensate the voltage drop over the DC cables up to a maximum of 1 Volt (i.e. 1V over the positive connection and 1V over the negative connection). If the voltage drop threatens to become larger than 1V, the charging current is limited in such a way that the voltage drop remains limited to 1V.

8.6.5. Temperature sensor (connection terminal J, see Appendix A)

For temperature-compensated charging, the temperature sensor (supplied with the inverter/charger) can be connected. The sensor is isolated and must be fitted to the negative terminal of the battery.

8.6.6. Parallel Connection

It is required to use identical units for three phase and parallel systems. In this case, as only one GX device is allowed per system, if you wish to parallel and/or three phase with this product, you must find the same model MultiPlus-II to pair.

To assist with finding identical units, consider instead using MultiPlus-II for parallel and three phase systems, and an external GX device.

Up to six units can be connected in parallel. When connecting this product with MultiPlus-II in a parallel system, the following requirements must be met:

> ⚠ It is essential the negative battery terminal between the units is always connected. A fuse or circuit breaker is not allowed on the negative.

- All units must be connected to the same battery.
- A maximum of six units connected in parallel.
- The devices must be identical (aside from GX part) and have the same firmware.
- The DC connection cables to the devices must be of equal length and cross-section.
- If a positive and a negative DC distribution point is used, the cross-section of the connection between the batteries and the DC distribution point must at least equal the sum of the required cross-sections of the connections between the distribution point and the units.
- Always interconnect the negative battery cables before placing the UTP cables.
- Place the units close to each other, but allow at least 10cm for ventilation purposes under, above and beside the units.
- UTP cables must be connected directly from one unit to the other (and to the remote panel). Connection or splitter boxes are not permitted.

- Only one remote control means (panel or switch) can be connected to the **system**. That means only one GX device. If multiple GX models are to be connected in parallel or three phase, the internal connection between GX card and other components must be disconnected. For this reason it is recommended to use the MultiPlus models without built-in GX for these systems.

8.6.7. Three-phase operation

The product can also be used in 3-phase wye (Y) configuration. To this end, a connection between the devices is made by means of standard RJ45 UTP cables (the same as for parallel operation). The **system** will require subsequent configuration.

Pre-requisites: see Section Voltage Sense

1. Note: the product is not suitable for 3-phase delta (Δ) configuration.
2. When the AS4777.2 grid code has been selected in VEConfigure, only 2 units in parallel per phase are allowed in a three phase system.

For full details on parallel and three-phase configuration always discuss with your Victron distributor first and please see this specific manual:

https://www.victronenergy.com/live/ve.bus:manual_parallel_and_three_phase_systems

8.6.8. Connection to the VRM Portal

Connection of the product to VRM requires an internet connection. This can be made via wifi, or preferably a hardwired ethernet cable to an internet connected router.

The VRM site id is located on a sticker inside the cable connections area of the device.

For more information to set up VRM, refer to the VRM Getting Started Manual.

8.7. Firmware updates

8.7.1. Changelog

The changelog is available in Victron Professional in the Firmware → Venus OS directory. To access Victron Professional, you need to sign up (free).

8.7.2. Via internet or with microSD-card/USB-stick

There are two ways to update the firmware:

1. Update it via the internet, either manually or let it check for new updates every day.
2. Update it from a microSD-card or USB-stick.

Direct download from the internet

On GX devices without a display (ie. a Venus GX or Cerbo GX without GX Touch), use Remote Console to get to below menus.

1. To update from the internet, navigate to: **Settings** → **Firmware** → **Online updates.**
2. Press 'Check for updates'.
3. If there is a newer firmware version, it will be shown under 'Update available'. Press to update to the new firmware version.
4. After the GX device has been updated to the new firmware version, make sure to check the settings of your installation.

> Note that for most system applications our advise is to keep automatic updates disabled; as is also the default factory setting.
>
> Instead, update the system at a convenient moment; when people are on location and ready to revert to a previous system and/or troubleshoot in case of issues.

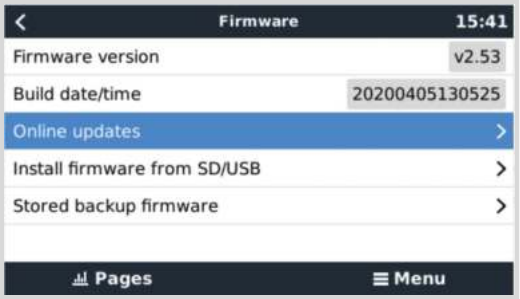

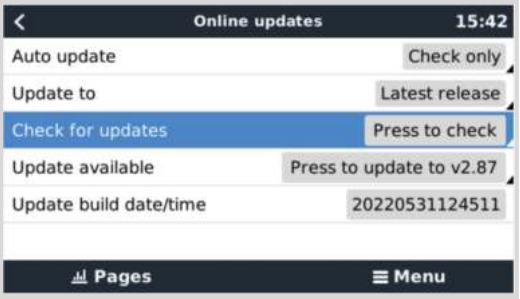

MicroSD-card or USB-stick

Updating with a microSD-card or USB-stick is called 'Offline updating'. Use it when updating a device that is not connected to the internet.

Step 1. Download

Get the latest swu file:

- GX Card in the MultiPlus-II or EasySolar GX - venus-swu-nanopi.swu

Note that the same files and the changelog is available on Victron Professional. There is also a Dropbox connection to connect your Dropbox to our shared folder, so you always have the latest firmware files available on your laptop.

Step 2. Install on a microSD-card or USB-stick

Store the file in the root folder of a USB-stick or microSD-card.

Step 3. Insert the device

Note that you will see a warning “Attached storage contains a firmware image, not using for data logging.”. That warning can safely be ignored.

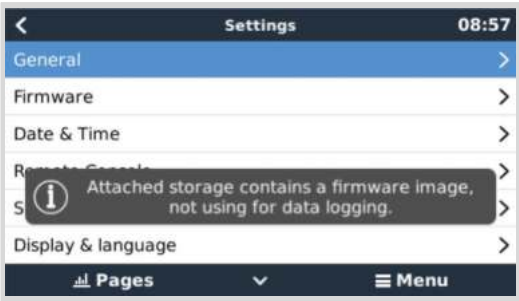

Step 4. Initiate the update

Navigate to **Settings** → **Firmware** → **Install firmware from SD/USB.**

Press 'Check for firmware on SD/USB'.

If the firmware in the microSD-card or USB-stick is newer than the running one, 'Firmware found' item will appear, press it to start the update process.

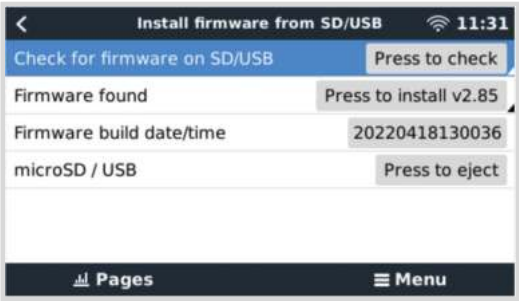

8.7.3. Revert to a previous firmware version

There are two ways to revert to a previous firmware version:

1. Using the Stored firmware backup feature or

2. by downloading a specific firmware file, saving it onto a microSD-card or USB-stick and install from SD/USB.

Stored firmware backup feature

This option allows you to switch between the current and the previous firmware version. No internet or SD-card needed.

1. Go to **Settings** → **Firmware** → **Stored backup firmware**.
2. The following screen shows the firmware version currently running and the firmware version that can be booted.
3. Click on 'Press to boot' to boot into the stored firmware version.
4. The stored firmware version is now booted and the previous firmware version will be saved instead.

Install a specific firmware version from SD/USB

There may be reasons why it is necessary to manually download and install a specific firmware version (e.g. an older firmware version that is not stored under "Stored backup firmware" on the GX device). This chapter explains how to do that.

1. Old Venus OS firmware versions are available for download here: https://updates.victronenergy.com/feeds/venus/release/images/
2. For MultiPlus-II GX and EasySolar-II GX use the nanopi folder.
3. Download the .swu file of the version required.
4. Store the .swu file in the root folder of a USB-stick or MicroSD-card.
5. Insert the USB-stick or MicroSD-card into your GX device.
6. Note that you will see a warning “Attached storage contains a firmware image, not using for data logging.”. That warning can safely be ignored.
7. Navigate to **Settings** → **Firmware** → **Install firmware from SD/USB**.
8. It should show the specific firmware version under 'Firmware found'. Click on it to install.

Note that while backporting is no problem in general, it may be that some settings are reset to their default values. Be sure to check this.

9. Configuration

This section is intended mainly for stand-alone applications

For grid connected Energy Storage Systems (ESS) please see https://www.victronenergy.com/live/ess:start

- Settings may only be changed by a suitable qualified installer with the appropriate training, and subject to local requirements. Please contact Victron for further information or necessary training.
- Read the instructions thoroughly before implementing changes.
- During setting of the charger, the AC input must be removed.

9.1. Standard settings: ready for use

On delivery, the product is set to standard factory values. In general, these settings are suitable for single-unit operation.

Possibly, the standard battery charging voltage is not suitable for your batteries! Refer to the manufacturer's documentation, or to your battery supplier!

Standard factory settings

Setting	**24 V / 48 V**
Inverter frequency	50 Hz
Input frequency range	45 – 65 Hz
Input voltage range	180 – 265 VAC
Inverter voltage	230 VAC
Stand-alone / parallel / 3-phase	stand-alone
AES (Automatic Economy Switch)	off
Ground relay	on
Charger on / off	on
Battery charge curve	four-stage adaptive with BatterySafe mode
Charging current	100% of the maximum charging current
Battery type	Victron Gel Deep Discharge (also suitable for Victron AGM Deep Discharge)
Automatic equalisation charging	off
Absorption voltage	28.8 V / 57.6 V
Absorption time	up to 8 hours (depending on bulk time)
Float voltage	27.6 V / 55.2 V
Storage voltage	26.4 V / 52.8 V (not adjustable)
Repeated absorption time	1 hour
Absorption repeat interval	7 days
Bulk protection	on
AC input current limit	32A for 3kVA model and 50A for 5kVA model (= adjustable current limit for PowerControl and PowerAssist functions)
UPS feature	on
Dynamic current limiter	off
WeakAC	off
BoostFactor	2
Programmable relay	alarm function
PowerAssist	on

9.2. Explanation of settings

Settings that are not self-explanatory are described briefly below. For further information, please refer to the help files in the software configuration programs.

Inverter frequency

Output frequency if no AC is present at the input.

Adjustability: 50 Hz; 60 Hz

Input frequency range

Input frequency range accepted. The product synchronises within this range with the AC input frequency. The output frequency is then equal to the input frequency.

Adjustability: 45 – 65 Hz; 45 – 55 Hz; 55 – 65 Hz

Input voltage range

Voltage range accepted. The product synchronises within this range with the AC input. The output voltage is then equal to the input voltage.

Adjustability:

Lower limit: 180 – 230 V

Upper limit: 230 – 270 V

Note : the standard lower limit setting of 180V is intended for connection to a weak mains supply, or to a generator with unstable AC output. This setting may result in a system shut down when connected to a 'brushless, self excited, externally voltage regulated, synchronous AC generator' (synchronous AVR generator). Most generators rated at 10kVA or more are synchronous AVR generators. The shut down is initiated when the generator is stopped and revs down while the AVR simultaneously 'tries' to keep the output voltage of the generator at 230V.

The solution is to increase the lower limit setting to 210VAC (the output of AVR generators is generally very stable), or to disconnect the product from the generator when a generator stop signal is given (with help of an AC contactor installed in series with the generator).

Inverter voltage

Output voltage in battery operation.

Adjustability: 210 – 245 V

Stand-alone / parallel operation / 2-3 phase setting

Using multiple devices, it is possible to:

- increase total inverter power (several devices in parallel)
- create a split-phase system with a separate autotransformer: see VE autotransformer datasheet and manual
- create a 3-phase system.

The standard product settings are for a single device in stand alone operation.

AES (Automatic Economy Switch)

If this setting is turned 'on', the power consumption in no-load operation and with low loads is decreased by approx. 20%, by slightly 'narrowing' the sinusoidal voltage. Applicable in stand-alone configuration only.

Search Mode

Instead of the AES mode, the **search mode** can also be chosen. If search mode is 'on', the power consumption in no-load operation is decreased by approx. 70%. In this mode the product, when operating in inverter mode, is switched off in case of no load or very low load, and switches on every two seconds for a short period. If the output current exceeds a set level, the inverter will continue to operate. If not, the inverter will shut down again.

The Search Mode 'shut down' and 'remain on' load levels can be set with VEConfigure.

The default settings are:

Action	Threshold
Shut down	40 Watt (linear load)
Turn on	100 Watt (linear load)

Ground relay (see appendix B)

With this relay, the neutral conductor of the AC output is grounded to the chassis when the back feed safety relays are open. This ensures the correct operation of earth leakage circuit breakers in the output. If required an external ground relay can be connected (for a split-phase system with a separate autotransformer). See appendix A.

Battery charge algorithm

The standard setting is 'Four-stage adaptive with BatterySafe mode'.

This is the recommended charge algorithm for lead acid batteries. See the help files in the software configuration programs for other features.

Battery type

The standard setting is the most suitable for Victron Gel Deep Discharge, Gel Exide A200, and tubular plate stationary batteries (OPzS). This setting can also be used for many other batteries: e.g. Victron AGM Deep Discharge and other AGM batteries, and many types of flat-plate flooded batteries.

With VEConfigure the charge algorithm can be adjusted to charge any battery type (Nickel Cadmium batteries, Lithium-ion batteries)

Absorption time

In case of the standard setting 'Four-stage adaptive with BatterySafe mode' the absorption time depends on the bulk time (adaptive charge curve), so that the battery is optimally charged.

9.2.1. Equalisation

Traction batteries require regular additional charging. In the equalisation mode, the product will charge with increased voltage for one hour (4V for a 48V battery). The charging current is then limited to 1/4 of the set value.

> **!** Equalisation mode supplies a higher charging voltage than most DC consuming devices can cope with. These devices must be disconnected before additional charging takes place.

Automatic equalisation charging

This setting is intended for flooded tubular plate traction or OPzS batteries. During absorption the voltage limit increases to 2,83V/cell (68V for a 48V battery) once the charge current has tapered down to less than 10% of the set maximum current.

See 'tubular plate traction battery charge curve' in VEConfigure.

Storage voltage, Repeated Absorption Time, Absorption Repeat Interval

See Appendix E.

Bulk Protection

When this setting is 'on', the bulk charging time is limited to 10 hours. A longer charging time could indicate a system error (e.g. a battery cell short-circuit).

AC input current limit

These are the current limit settings for which PowerControl and PowerAssist come into operation.

AC input current limit range with PowerAssist setting enabled:

3kVA models from 3,7 A minimum to 32 A maximum

5kVA models from 5.7 A minimum to 50 A maximum

Factory setting: the maximum value.

UPS feature

If this setting is 'on' and AC on the input fails, the product switches to inverter operation practically without interruption.

The output voltage of some small generator sets is too unstable and distorted for using this setting – the product would continually switch to inverter operation. For this reason, the setting can be turned off. The product will then respond less quickly to AC input voltage deviations. The switchover time to inverter operation is consequently slightly longer, but most equipment (most computers, clocks or household equipment) is not adversely impacted.

Recommendation: Turn the UPS feature off if the product fails to synchronise, or continually switches back to inverter operation.

This setting is also often used for 'classical' generators that respond slowly to sudden load variation.

Dynamic current limiter

Intended for generators, the AC voltage being generated by means of a static inverter (so-called 'inverter' generators). In these generators, engine rpm is reduced in case of low load: this reduces noise, fuel consumption and pollution. A disadvantage is that the output voltage will drop severely or even completely fail in the event of a sudden load increase. More load can only be supplied after the engine is up to speed.

If this setting is 'on', the device will start supplying extra power at a low generator output level and gradually allow the generator to supply more, until the set current limit is reached. This allows the generator engine to get up to speed.

This setting is also often used for 'classical' generators that respond slowly to sudden load variation.

Weak AC

Strong distortion of the input voltage can result in the charger hardly operating or not operating at all. If WeakAC is set, the charger will also accept a strongly distorted voltage, at the cost of greater distortion of the input current.

Recommendation : Turn WeakAC on if the charger is hardly charging or not charging at all (which is quite rare!). Also turn on the dynamic current limiter simultaneously, and reduce the maximum charging current to prevent overloading the generator if necessary.

Note: when WeakAC is on, the maximum charge current is reduced by approximately 20%.

BoostFactor This value adjusts the PowerAssist behaviour. If you are experiencing issues with PowerAssist (e.g. overload), please consult with a specialist trained by Victron Energy before attempting to modify.

Programmable relay

The relay can be programmed for all kinds of other applications, for example as a starter relay for a generator.

Auxiliary AC output (AC-out-2)

Intended for non-critical loads. Default behaviour only allows AC-out-2 after a 30 second delay when AC input is detected. A Current measurement circuit enables PowerAssist. Override programming for more control of this relay is possible.

9.3. Inverter/Charger

For more information regarding the configuration of the Inverter/Charger component of the EasySolar-II GX, please see the MultiPlus-II manuals

Full programming functionality of the Inverter/charger requires use of a laptop computer with VEConfigure. Limited configuration is possible with VictronConnect

9.4. SmartSolar MPPT 250/70 charge controller

The Solar Charger is configured using VictronConnect. The easiest method of connecting to the Solar Charger part is via Bluetooth. This works for Android, iOS and macOS. Bluetooth connection is not currently supported for Windows.

When required to use Windows, unplug the VE.Direct cable from the Solar Charger, and use a VE.Direct USB interface cable to your Windows laptop. Once completed, reconnect the VE.Direct cable that runs between the internal GX device and the Solar Charger.

For the complete documentation for the MPPT included inside the EasySolar-II GX, please refer to these documents:

SmartSolar MPPT 250/70 documentation

VictronConnect MPPT Solar Chargers

VictronConnect manual

10. Maintenance

The product does not require specific maintenance. It will suffice to check all connections once a year.

Avoid moisture and oil/soot/vapours, and keep the device clean.

11. Error Indications

With the procedures below, most errors can be quickly identified. If an error cannot be resolved, please refer to your Victron Energy supplier.

11.1. General error indications

Problem	Cause	Solution
No output voltage on AC-out-2, even after waiting.	in inverter mode	AC input is not connecting. Follow steps in MultiPlus generator FAQ.
Unit will not switch over to generator or mains operation.	Circuit breaker or fuse in the AC-in input is open as a result of overload.	Remove overload or short circuit on AC-out-1 or AC-out-2, and reset fuse/breaker.
Inverter operation not initiated when switched on.	The battery voltage is excessively high or too low. No voltage on DC connection.	Ensure that the battery voltage is within the correct range.
'Low battery'	The battery voltage is low.	Charge the battery or check the battery connections.
'Low battery' (Shutdown)	The converter switches off because the battery voltage is too low.	Charge the battery or check the battery connections.
Overload	The converter load is higher than the nominal load.	Reduce the load.
'Overload' (Shutdown)	The converter is switched off due to excessively high load.	Reduce the load.
'Over Temperature'	The environmental temperature is high, or the load is too high.	Install the converter in cool and well-ventilated environment, or reduce the load.
'Low Bat V Overload' (Shutdown)	Low battery voltage and excessively high load.	Charge the batteries, disconnect or reduce the load, or install higher capacity batteries. Fit shorter and/or thicker battery cables.
'High DC Ripple'	Ripple voltage on the DC connection exceeds 1,5Vrms.	Check the battery cables and battery connections. Check whether battery capacity is sufficiently high, and increase this if necessary.
'DC Ripple Shutdown'	The inverter is switched off due to an excessively high ripple voltage on the input.	Install batteries with a larger capacity. Fit shorter and/or thicker battery cables, and reset the inverter (switch off, and then on again).
The charger does not operate.	The AC input voltage or frequency is not within the range set.	Ensure that the AC input is between 185VAC and 265VAC, and that the frequency is within the range set (default setting 45-65 Hz).
	Circuit breaker or fuse in the AC-in input is open as a result of overload.	Remove overload or short circuit on AC-out-1 or AC-out-2, and reset fuse/breaker.
	The battery fuse has blown.	Replace the battery fuse.
	The distortion or the AC input voltage is too large (generally generator supply).	Turn the settings WeakAC and dynamic current limiter on.
The charger does not operate. 'Bulk Protection' shown.	EasySolar-II GX is in 'Bulk protection' mode thus, the maximum bulk charging time of 10 hours is exceeded. Such a long charging time could indicate a system error (e.g. a battery cell short-circuit).	Check your batteries. NOTE: You can reset the error mode by switching off and back on the EasySolar-II GX. The standard EasySolar-II GX factory setting of the 'Bulk protection' mode is switched on. The 'Bulk protection' mode can be switched off with help of VEConfigure only.
The battery is not completely charged.	Charging current excessively high, causing premature absorption phase.	Set the charging current to a level between 0.1 and 0.2 times the battery capacity.
	Poor battery connection.	Check the battery connections.

	The absorption voltage has been set to an incorrect level (too low).	Set the absorption voltage to the correct level.
	The float voltage has been set to an incorrect level (too low).	Set the float voltage to the correct level.
	The available charging time is too short to fully charge the battery.	Select a longer charging time or higher charging current.
	The absorption time is too short. For adaptive charging this can be caused by an extremely high charging current with respect to battery capacity, so that bulk time is insufficient.	Reduce the charging current or select the 'fixed' charging characteristics.
The battery is overcharged.	The absorption voltage is set to an incorrect level (too high).	Set the absorption voltage to the correct level.
	The float voltage is set to an incorrect level (too high).	Set the float voltage to the correct level.
	Poor battery condition.	Replace the battery.
	The battery temperature is too high (due to poor ventilation, excessively high environmental temperature, or excessively high charging current).	Improve ventilation, install batteries in a cooler environment, reduce the charging current, **and connect the temperature sensor.**
The charging current drops to 0 as soon as the absorption phase initiates.	Defective battery temperature sensor	Disconnect the temperature sensor plug in the EasySolar-II GX. If charging functions correctly after approximately 1 minute, the temperature sensor should be replaced.
	The battery is over-heated (+50°C)	Install the battery in a cooler environment
		Reduce the charging current
		Check whether one of the battery cells has an internal short circuit

11.2. VE.Bus error codes

A VE.Bus system can display various error codes. These codes are displayed on the front GX display screen.

To interpret a VE.Bus error code correctly, you should refer to the VE.Bus error codes documentation

https://www.victronenergy.com/live/ve.bus:ve.bus_error_codes.

Code	Meaning:	Cause/solution:
1	Device is switched off because one of the other phases in the system has switched off.	Check the failing phase.
3	Not all, or more than, the expected devices were found in the system.	The system is not properly configured. Reconfigure the system. If the error persists, possible communication cable error. Check the cables and switch all equipment off, and then on again.
4	No other device whatsoever detected.	Check the failing unit. Check the communication cables.
5	Overvoltage on AC-out.	Check the AC cables.
10	System time synchronisation problem occurred.	Should not occur in correctly installed equipment. Check the communication cables.
14	Device cannot transmit data.	Check the communication cables (there may be a short circuit).
17	One of the devices has assumed 'master' status because the original master failed.	Check the failing unit. Check the communication cables.
18	Overvoltage has occurred.	Check AC cables.
22	This device cannot function as 'slave'.	This device is an obsolete and unsuitable model. It should be replaced.

Code	Meaning:	Cause/solution:
24	Switch-over system protection initiated.	Should not occur in correctly installed equipment. Switch all equipment off, and then on again. If the problem recurs, check the installation. **Possible solution: increase lower limit of AC input voltage to 210 VAC (factory setting is 180 VAC)**
25	Firmware incompatibility. The firmware of one the connected devices is not sufficiently up to date to operate in conjunction with this device.	1) Switch all equipment off. 2) Switch the device returning this error message on. 3) Switch on all other devices one by one until the error message reoccurs. 4) Update the firmware in the last device that was switched on.
26	Internal error.	Should not occur. Switch all equipment off, and then on again. Contact Victron Energy if the problem persists.

12. Technical Specifications

12.1. Inverter/Charger

	Specifications		
Model	24/3000/70-32	48/3000/35-32	48/5000/70-50
PowerControl & PowerAssist	Yes		
Transfer switch	32A	32A	50A
Maximum AC input current (no inrush)	32A	32A	50A
Auxiliary output	32A	32A	50A
	INVERTER		
Input voltage range	19 - 33V	38 – 66V	38 - 66V
Nominal DC current	150A	75A	110A
Nominal Battery voltage	24V	48V	
AC Output	Output voltage: 230 VAC ± 2% Frequency: 50 Hz ± 0,1% (1)		
Cont. output power at 25°C (3)	3000VA / 2400W	3000VA / 2400W	5000VA / 4000W
Cont. output power at 45°C	2000W	2000W	3300W
Maximum feed-in power	2470W / 3000VA	2470W / 3000VA	4400W / 5000VA
Nominal current	11A	11A	19A
Max inverter peak fault current	32A during 1 sec		52A during 1sec
Power factor range	+/- 0.6		
Peak power	5500W	5500W	9000W
Maximum efficiency	94%	95%	96%
Zero load power	13W	11W	18W
Zero load power in AES mode	9W	7 W	12W
Zero load power in Search mode	3W	2W	2W
	Charger		
AC Input	187-250 Vac, 32A, 50/60Hz		187-250Vac, 50A, 50/60Hz
Nominal battery voltage	24V	48V	
Charge voltage - Absorption / Float / Storage'	28.8V / 27.6V / 26.4V	57.6V / 55.2V / 52.8V	
Maximum battery charge current (4)	70A	35A	70A
Battery temperature sensor	Yes		
Programmable (AUX) relay (5)	Yes		
Protection (2)	a-g		
VE.Bus communication port	For parallel and three phase operation, remote monitoring and system integration		
General purpose com. port	Yes, 2x		
Vibration Class	3M1 for indoor conditional use		
Protective class	1		
Conditional short circuit current Icc	6kA		
Inverter topology	Reinforced isolated		

12.2. SmartSolar MPPT Charge Controller

Specifications

Model	SmartSolar MPPT 250/70-Tr	SmartSolar MPPT 250/100-Tr
Maximum output current	70A	100 A
Maximum PV power	24V: 2000W / 48V: 4000W	5800 W
Maximum PV open circuit voltage	250V	
PV input operating voltage range	24V: 24 – 250V, 48V: 43 – 250V	
Isc PV, max PV short circuit current	35A	70A
Maximum efficiency	99%	
Self-consumption	20mA	
Charge voltage 'absorption', default	57,6V	
Charge voltage 'float', default setting	55,2V	
Protection (2)	a-e	

12.3. General

Specifications	
Interfaces	BMS-Can port (VE.Can not supported), USB, Ethernet, VE.Direct, Wi-Fi
Remote on-off	Yes
Operating temperature range	-20 to +45 °C (fan assisted cooling). Maximum Altitude 2000m
Humidity (non-condensing)	max 95%
Enclosure	
Material & Color	Steel (blue RAL 5012)
Protection category	IP21
Pollution degree	Pollution degree 2, OVC3
Battery-connection	M8 bolts
PV Connection	M6 bolts
230 V AC-connection	Screw terminals 13 mm2 (6 AWG)
Weight	24/3kVA - 26 kg 48/3kVA - 26 kg 48/5kVA - 38.6 kg
Dimensions (hxwxd)	3kVA - 499 x 268 x 237 mm 5kVA - 604 x 323 x 253 mm
Standards	
Safety	EN-IEC 60335-1, EN-IEC 60335-2-29 EN-IEC 62109-1, EN-IEC 62109-2
Emission / Immunity	EN 55014-1, EN 55014-2, EN-IEC 61000-3-2, EN-IEC 61000-3-3, IEC 61000-6-1, IEC 61000-6-2, IEC 61000-6-3
Anti-islanding	See product page
Active anti islanding protection detection method	Some sort of frequency shift mechanism

1) Can be adjusted to 60 Hz

2) Protection key:

a) output short circuit

b) overload

c) battery voltage too high

d) battery voltage too low

e) temperature too high

f) 230 VAC on inverter output

g) input voltage ripple too high

3) Non-linear load, crest factor 3:1

4) Up to 25°C ambient

5) Programmable relay which can be set for general alarm, DC under voltage or genset start/stop function.

12.4. GX Device

GX Card Specifications	
User interface	
Display	2x16 character display
Remote Console	yes
Buzzer	yes
Victron comm. ports	
VE.Direct ports (always isolated)	1
Dedicated BMS-Can port (VE.Can not supported)	2 paralleled RJ45 sockets – isolated
VE.Bus	2 paralleled RJ45 sockets – isolated
Non Victron-products	
Canbus-BMS batteries	Many battery brands. See battery compatibility for details
Fronius PV Inverters	See here for details
SMA PV Inverters	See here for details
ABB PV Inverters	See here for details
SolarEdge PV Inverters	See here for details
Communication	
USB	1 USB Host port - not isolated
Ethernet	10/100 RJ45 socket
WiFi	built-in
Bluetooth Smart	no
Micro SDcard slot	no
Second CAN-bus port	no
VE.Can port	no
Built-in RS485	no
IO	
Programmable relay(7)	n/a
Resistive tank level inputs	no
Temperature sense inputs	no
Digital inputs	no
Performance	
CPU	quad core
RAM	512MB
Other	
Supply voltage	powered internally, no external supply
Mounting	Built-in
Operating temperature	-20 to +50°C

Battery backupped clock	yes

13. Internal Topography

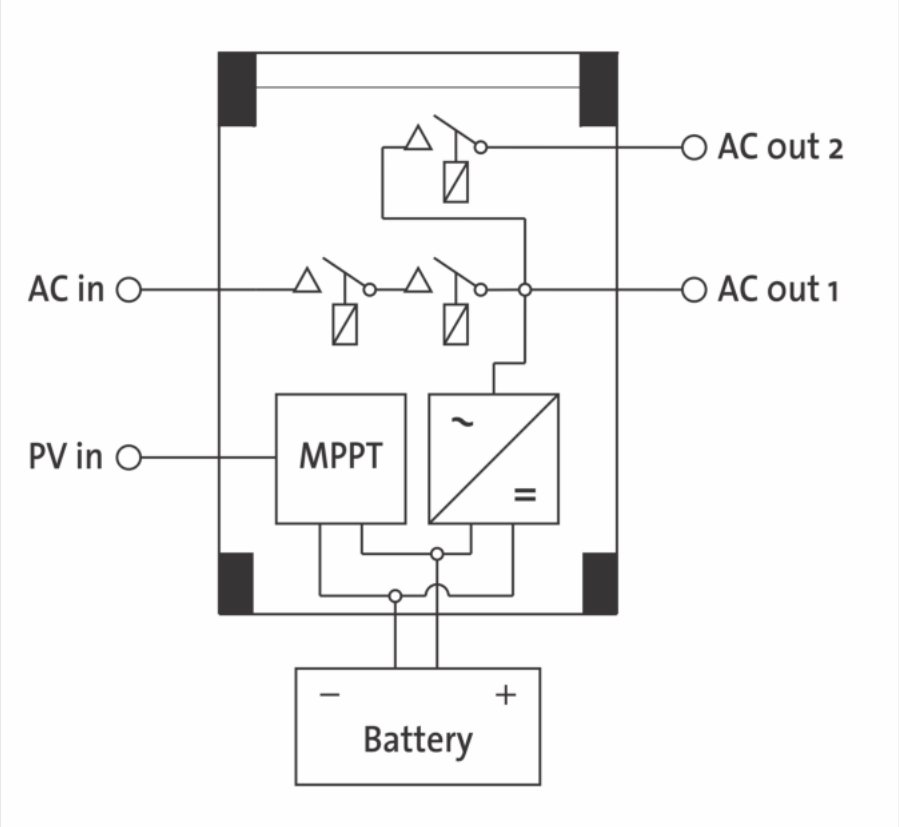

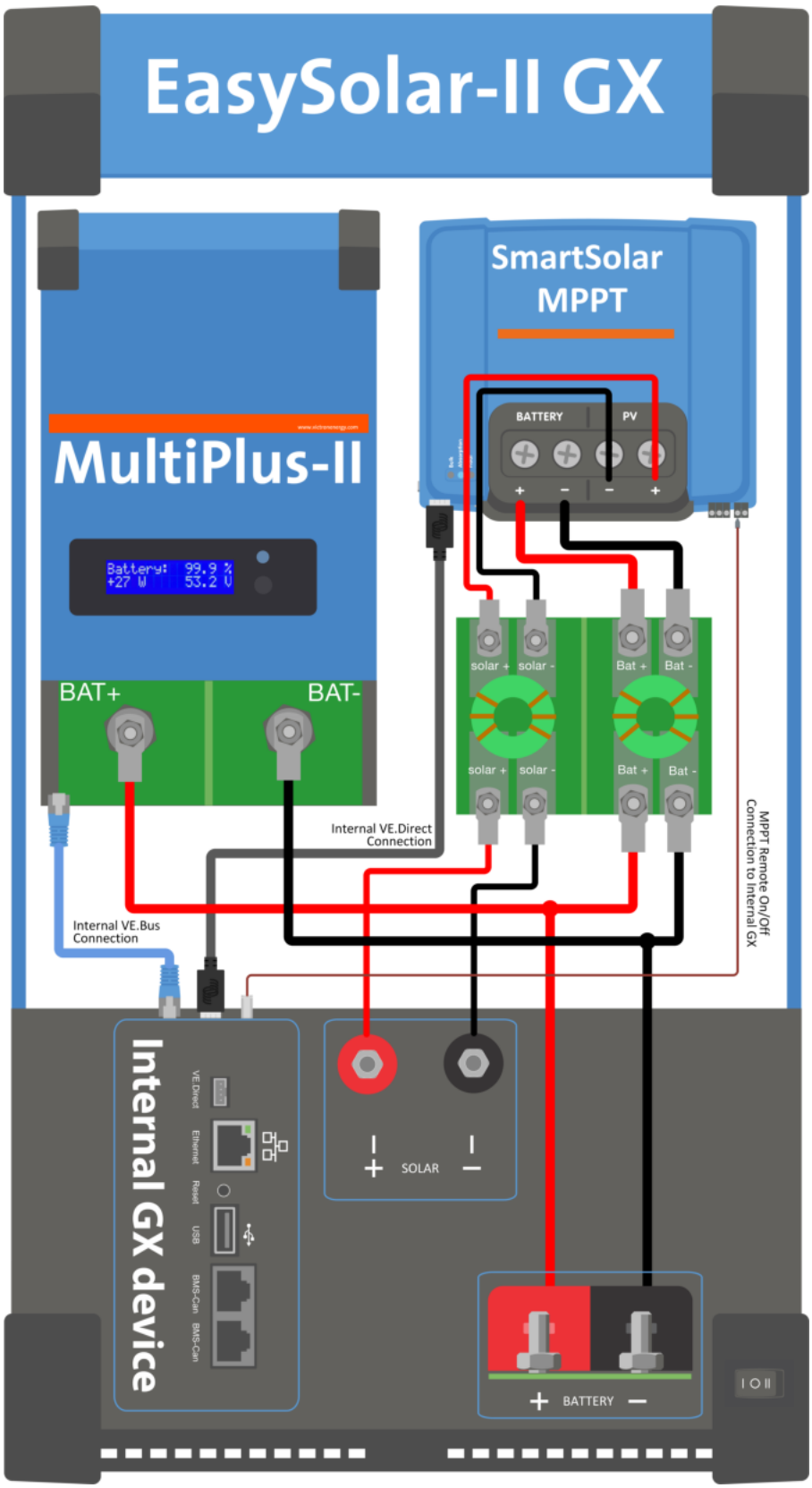
EasySolar-II GX
MultiPlus-II
Battery: 99.9 %
+27 W 53.2 V
BAT+
BAT-
SmartSolar
MPPT
BATTERY
PV
solar +
solar -
Bat +
Bat -
Internal VE.Direct
Connection
Internal VE.Bus
Connection
MPPT Remote On/Off
Connection to Internal GX
Internal GX device
VE.Direct
Ethernet
Reset
USB
BMS-Can
BMS-Can
SOLAR
BATTERY

14. Appendix

14.1. Appendix A: Connection Overview

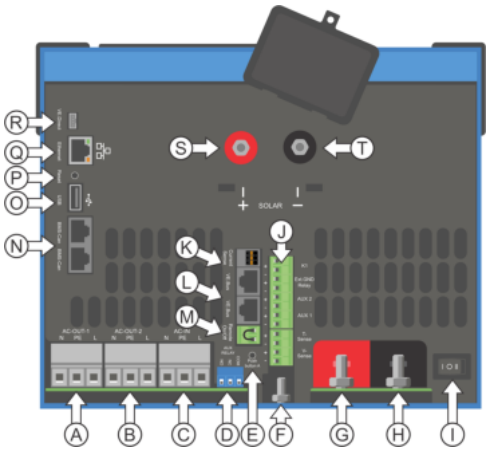

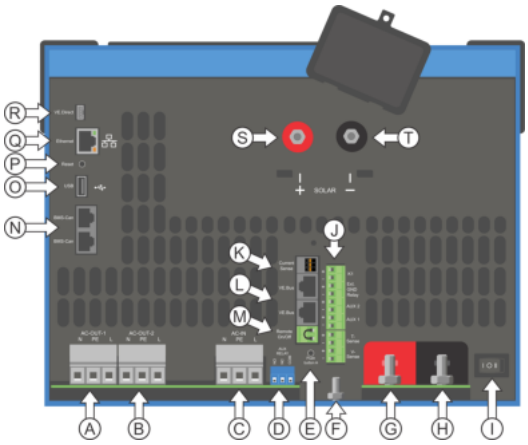

Reference	Description	Connection
A	Load connection. AC-OUT-1 Left to right:	N (neutral), PE (earth/ground), L (phase)
B	Load connection. AC-OUT-2 Left to right:	N (neutral), PE (earth/ground), L (phase)
C	AC input 1, AC input 2, AC Output	N (neutral), PE (earth/ground), L (phase)
D	Alarm contact: left to right	NO, NC, COM.
E	Start without Assistants	Press and hold this button when starting
F	Primary ground connection	M6 (PE)
G	battery positive connection.	M8
H	battery minus connection.	M8
I	switch	-:On, 0:Off, =:charger only
J	Terminals top to bottom:	1. Auxiliary power supply 12 V 100 mA
		2. Programmable open collector ooutput (K1) 70V 100mA
		3. External ground relay +
		4. External ground relay –
		5. Analog/digital (AUX) input 1 +
		6. Analog/digital (AUX) input 1 –
		7. Analog/digital (AUX) input 2 +
		8. Analog/digital (AUX) input 2 –
		9. Temperature sense +
		10 .Temperature sense –
		11. Battery voltage sense +
		12. Battery voltage sense -
K	External current sensor	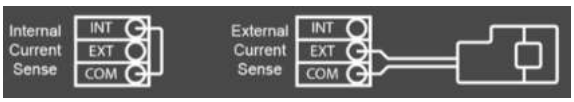 To connect the current sensor; remove the wire bridge between the INT and COM terminals, connect the red sensor wire to the EXT terminal and connect the white sensor wire to the COM terminal.

L	2x RJ45 VE-BUS connector	for remote control and/or parallel / three-phase operation
M	Connector for remote switch	Short connection to switch “on”.
N	Dedicated BMS-Can port (VE.Can not supported)	
O	USB	
P	Reset Button	Reboots the GX card component only
Q	Ethernet Port	
R	VE.Direct Port	
S	Solar Positive M6 Bolt	
T	Solar Negative M6 Bolt	

14.2. Appendix B: Block Diagram

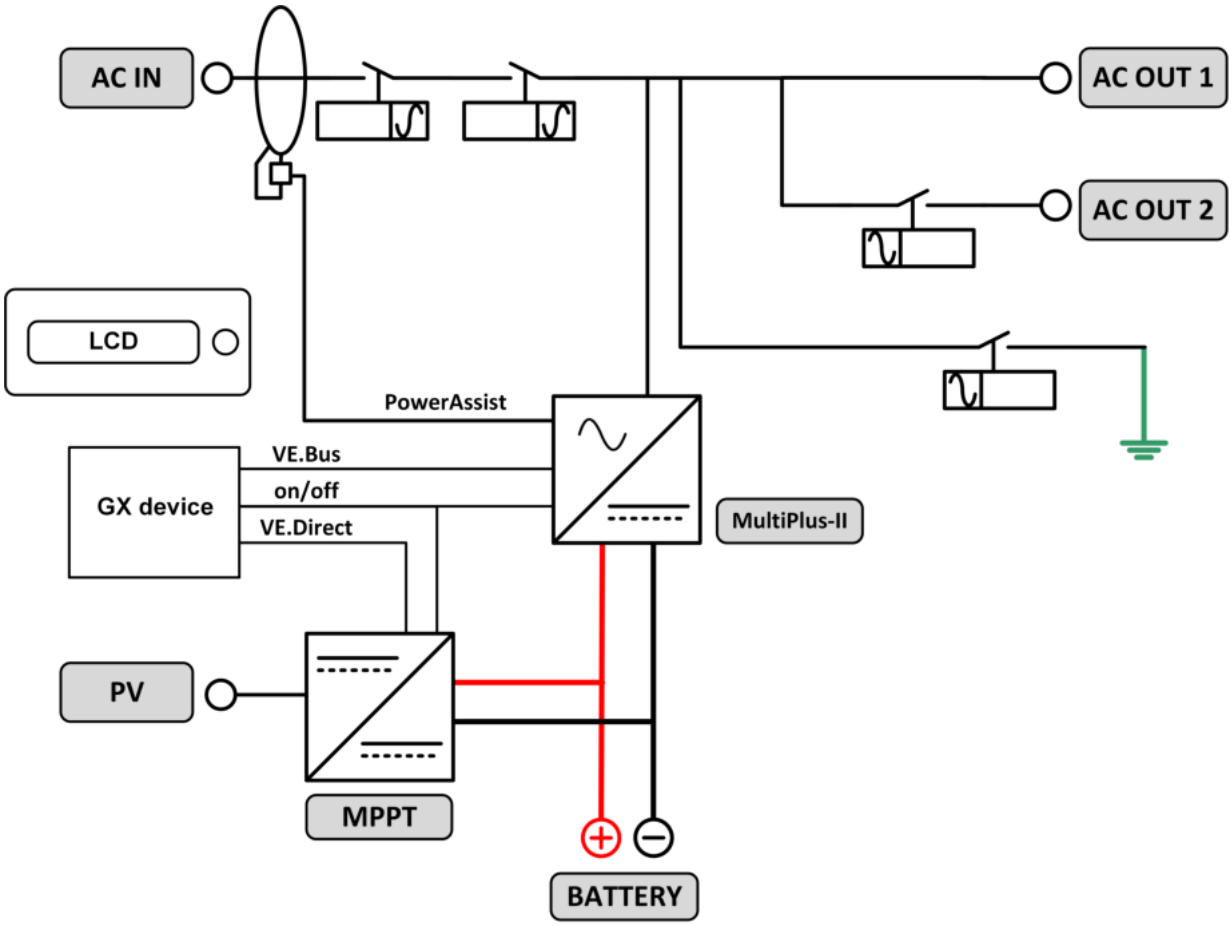

14.3. Appendix C: Parallel Connections

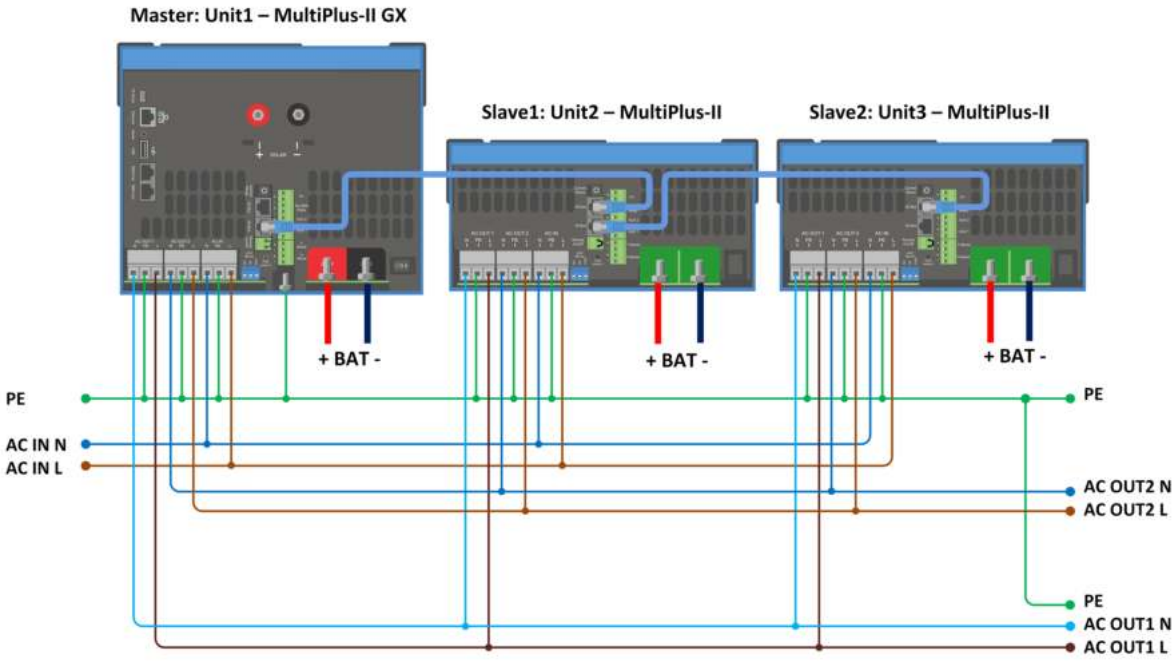

Additional conditions are required for parallel systems - please read further specific documentation here - https://www.victronenergy.com/live/ve.bus:manual_parallel_and_three_phase_systems

14.4. Appendix D: Three Phase Connections

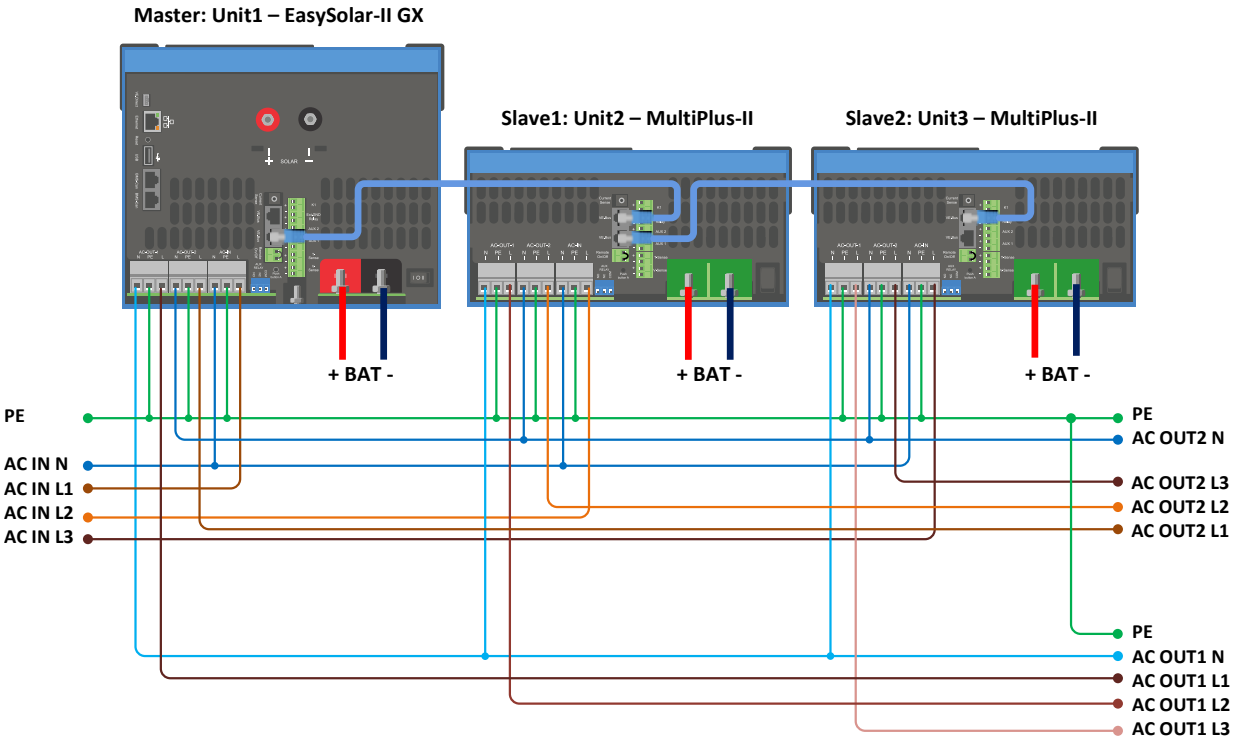

Additional conditions are required for three phase systems - please read further specific documentation here - https://www.victronenergy.com/live/ve.bus:manual_parallel_and_three_phase_systems

14.5. Appendix E: Charge Characteristic

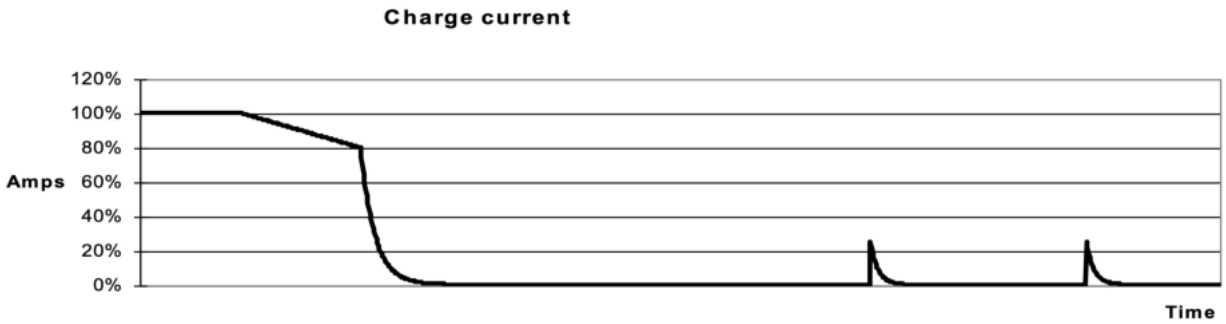

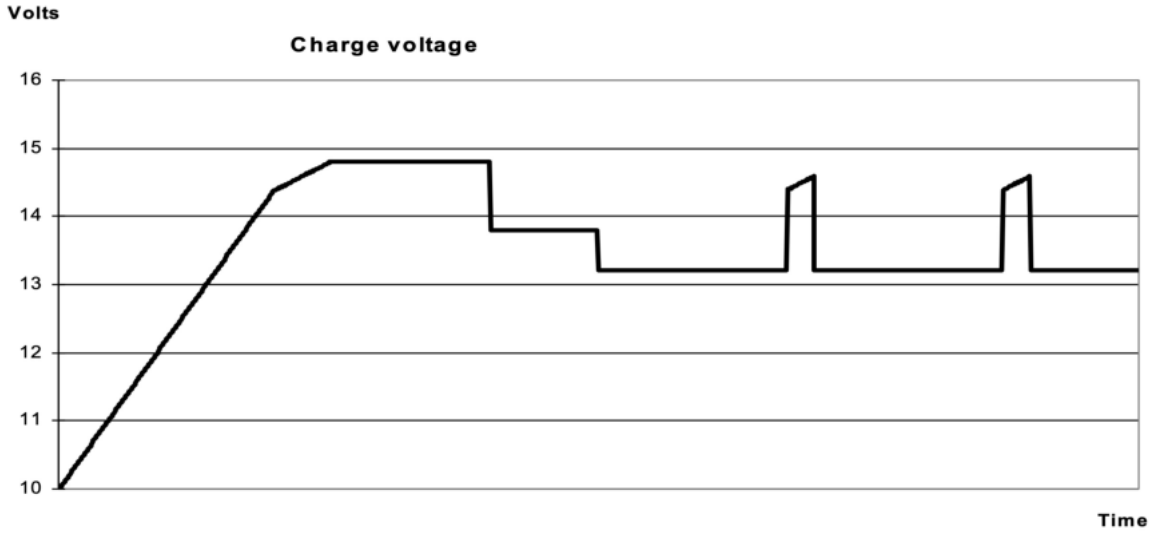

14.5.1. 4-stage charging:

Bulk Entered when charger is started. Constant current is applied until nominal battery voltage is reached, depending on temperature and input voltage, after which constant power is applied up to the point where excessive gassing is starting (28.8 V resp. 57.6 V, temperature compensated).

14.5.2. Battery Safe

The applied voltage to the battery is raised gradually until the set Absorption voltage is reached. The Battery Safe Mode is part of the calculated absorption time.

14.5.3. Absorption

The absorption period is dependent on the bulk period. The maximum absorption time is the set Maximum Absorption time.

14.5.4. Float

Float voltage is applied to keep the battery fully charged

14.5.5. Storage

After one day of float charge the output voltage is reduced to storage level. This is 26,4 V resp. 52,8 V (for 24 V and 48 V charger). This will limit water loss to a minimum when the battery is stored for the winter season. After an adjustable time (default = 7 days) the charger will enter Repeated Absorption-mode for an adjustable time (default = one hour) to 'refresh' the battery.

14.6. Appendix F: Temperature Compensation

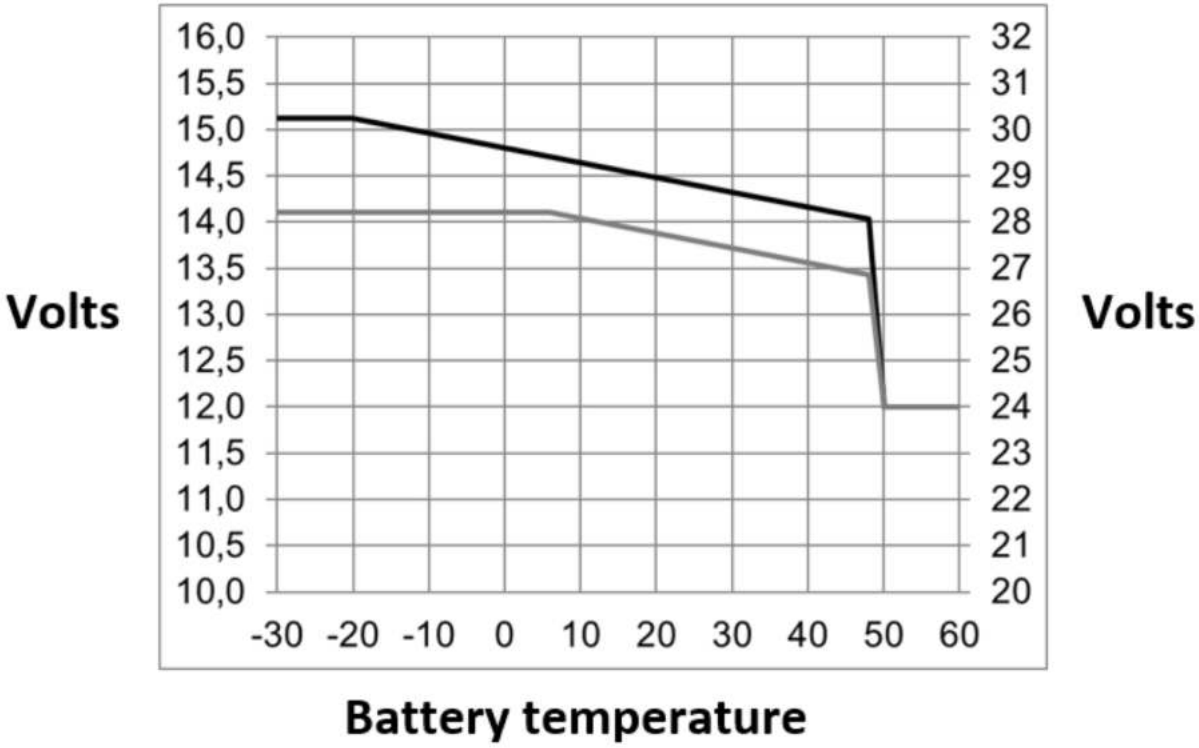

Default output voltages for Float and Absorption are at 25 °C. Reduced Float voltage follows Float voltage and Raised Absorption voltage follows Absorption voltage. In adjust mode temperature compensation does not apply.

14.7. Appendix G: Dimensions

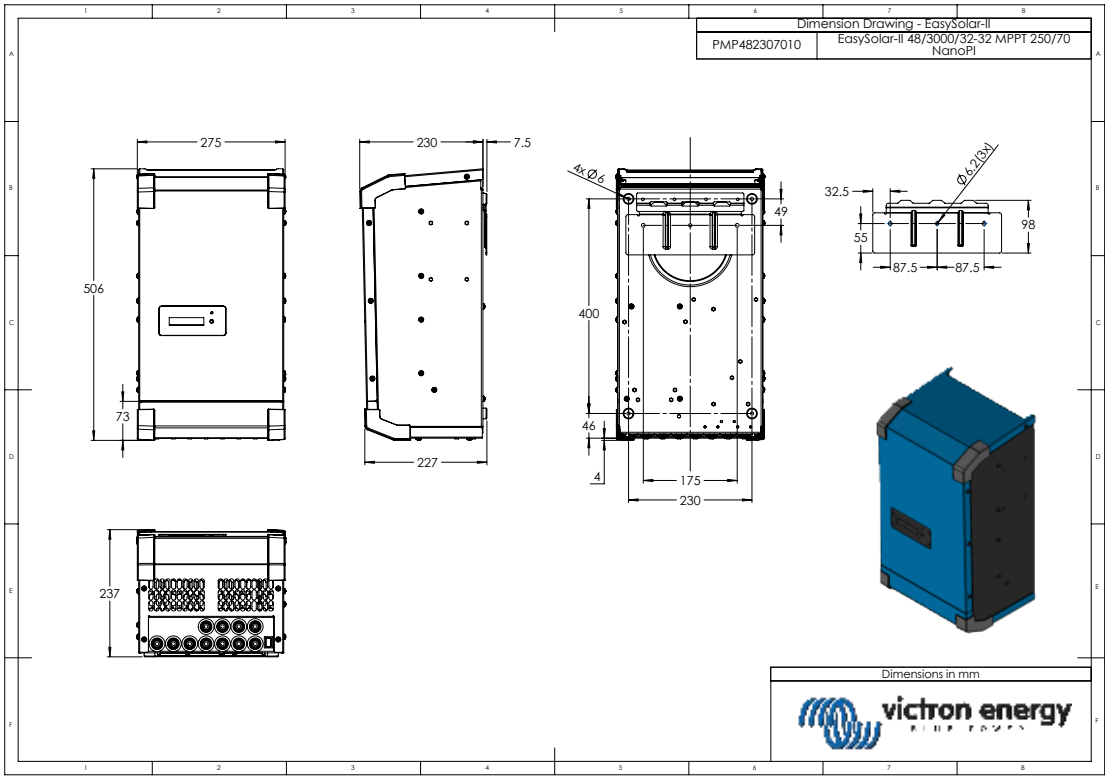

Dimension Drawing - EasySolar-II 48/3000/35-32 MPPT 250/70 GX - PMP482307010

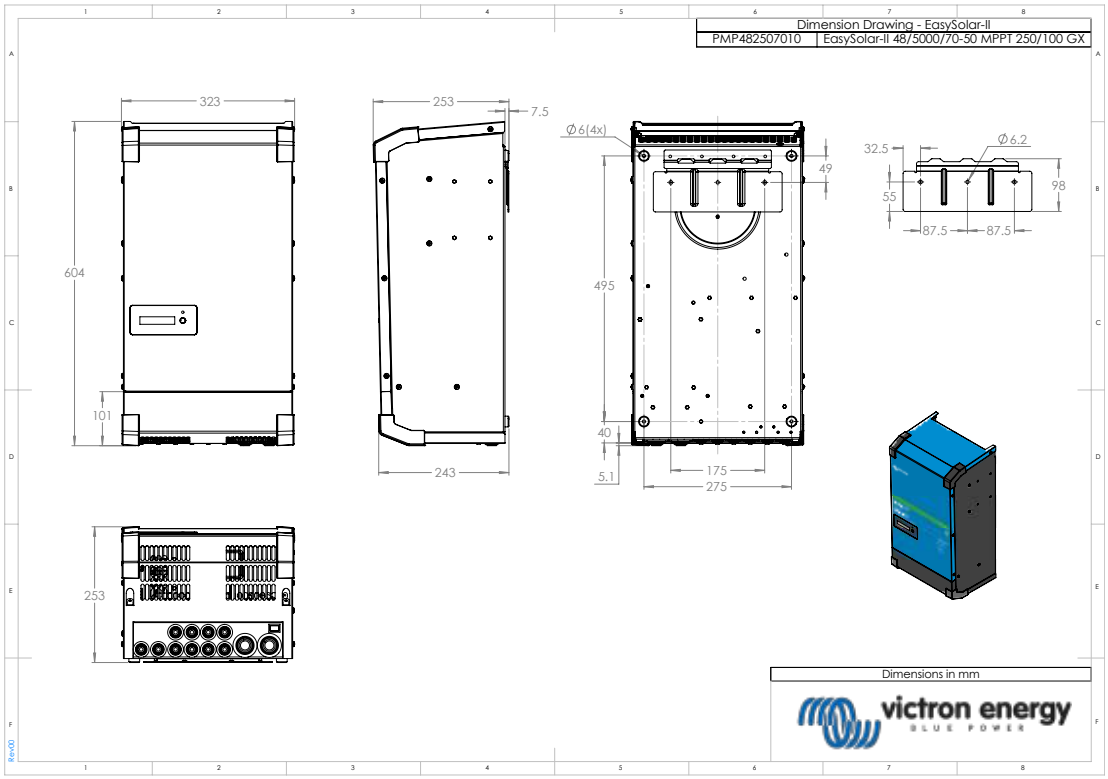

Dimension Drawing - EasySolar-II 48/5000/70-50 MPPT 250/100 GX - PMP482507010