HYVA CYLINDER

714 34 295

type: UME 129-4-1020-K168-45-1/2´´-HC

tipping weight: 12-20 ton

Stage diameters
129
110
91
72

front view cylinder

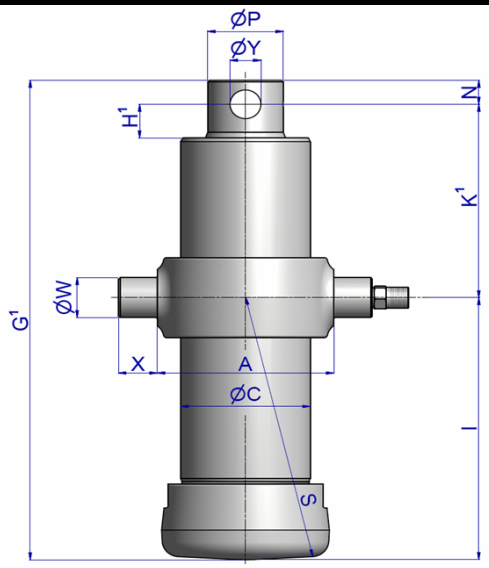

A	175
ØC	150
G[1]	474
I	276
K[1]	168
H[1]	62
N	30
ØP	69
ØY	35.5
S	286
ØW	45
X	45

[1]including 20 mm pull-out [tol. -5; +30 mm]

[2]cylinder is delivered including oil inlet swivel adapter

specifications

total stroke[1]	1020	mm
dry weight cylinder only	47	kg
total volume	9.3	L
working volume	8.5	L
maximum pressure	220	bar
maximum pump flow	61	l/min
maximum allowable thrust first stage[3]	17.5	ton
oil inlet	1/2´´	BSP

technical notes

This cylinder is a lifting device only and may not be used as a structural member or be subjected to side load. Sideload and/or poor alignment might result in cylinder leakage. Hyva therefore strongly recommends the use of a cradle, even in instances where the cylinder only tips to the rear or to the side. The cylinder is painted black RAL9005. For suitable hydraulic oils, please refer to data sheet OIL-0011. For For details of available brackets and cradles, please refer data sheet 015BRA06. Detailed calculations can be made using the HYVA Tipper Program, freely available from tipper.hyva.com.

[3]The cylinder thrust on the first stage (from the HYVA Tipper Program) must not exceed the maximum allowable (see specifications above).

tipping view

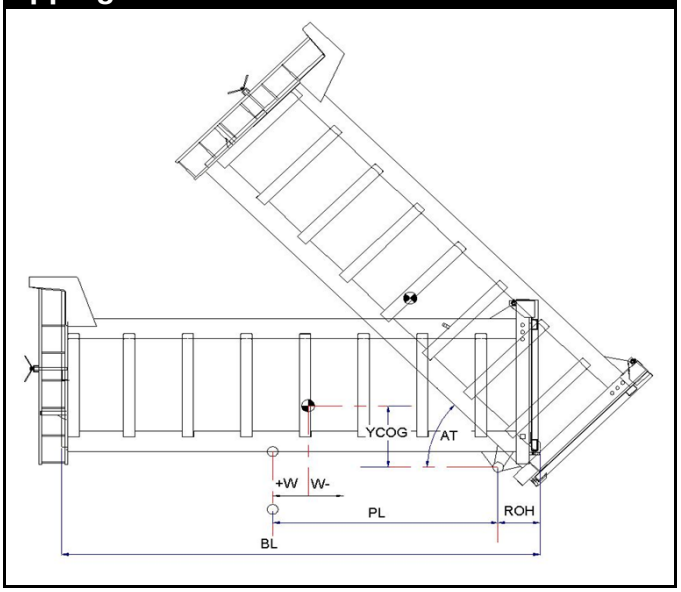

tipping weight

PL	1330			**mm**	1180		
YCOG	500			**mm**	500		
ROH	500			**mm**	500		
BL	4070	3660	3330	**mm**	3730	3360	3050
CYL w.r.t. COG (W)	-200	0	170	**mm**	-190	0	150
	Tipping weight for full stroke of 46°				Tipping weight for full stroke of 52°		
Tipping weight	12	14	17	**ton**	13	16	19
	Tipping weight for second last stage, up to 35°				Tipping weight for 2nd last stage, up to 39°		
Tipping weight	15	18	20	**ton**	15	18	20

Subject to change without notice, no rights reserved.

HYVA CYLINDER

714 34 295

type **UME 129-4-1020-K168-45-1/2´´-HC**

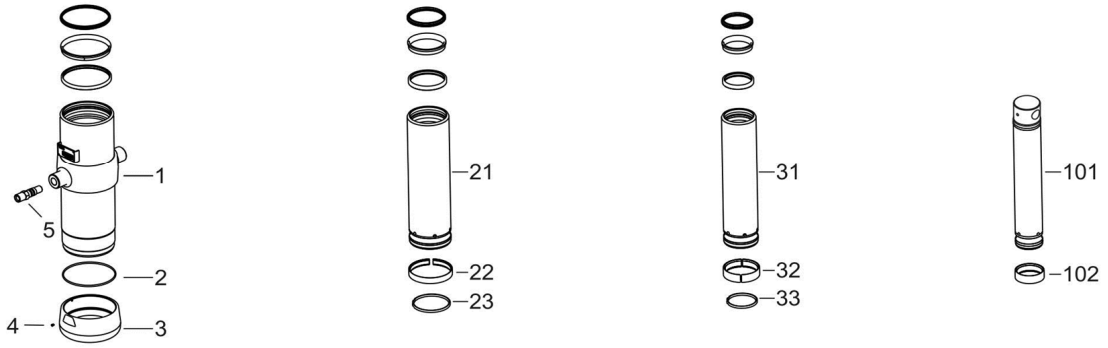

Spare part list

Pos	Part no.	Description	Qty.
1	73505200	BASE 149-0358-N0106	1
2	01226680	O-RING 145 X 4 70 SHORE	1
3	73101030	THREADED BOTTOM UM 149	1
4	01792571	LOCKING SCREW M6X12 INT. HEX. DIN 916	1
5	73103000	OIL INLET ADAPTOR UM 1/2"OT+O-RING	1
21	73604201	STAGE 129-0358-HC	1
22	71807129 K	SLIDER FL 129/GF 129 (2 X 1/2)	1
23	71812129 K	LIFTRING FL 129/HP 129	1
31	73603201	STAGE 110-0358-HC	1
32	71807110 K	SLIDER FL 110/GF 110 (2 X 1/2)	1
33	71812110 K	LIFTRING FL 110	1
41	73602201	STAGE 091-0358-HC	1
42	71807091 K	SLIDER FL 091 (2 X 1/2)	1
43	71812091 K	LIFTRING FL 091	1

Spare part list

Pos	Part no.	Description	Qty.
101	73431161	PISTON E 072-0400-HC	1
102	71807072 K	SLIDER FL 072 (2 X 1/2)	2

Seal kit complete

Part no.	Description
719 04 440K	Complete packset: Consists of all packsets with packset grease and o-ring.

Subject to change without notice, no rights reserved.