Alpha series - Front end cylinder with outer cover

Item no. 70524249

FC A129-3-04270-004-K1050-HC

Tipping weight 45 - 63 ton

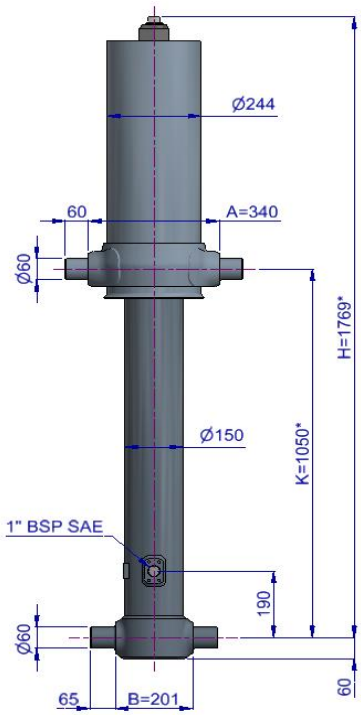

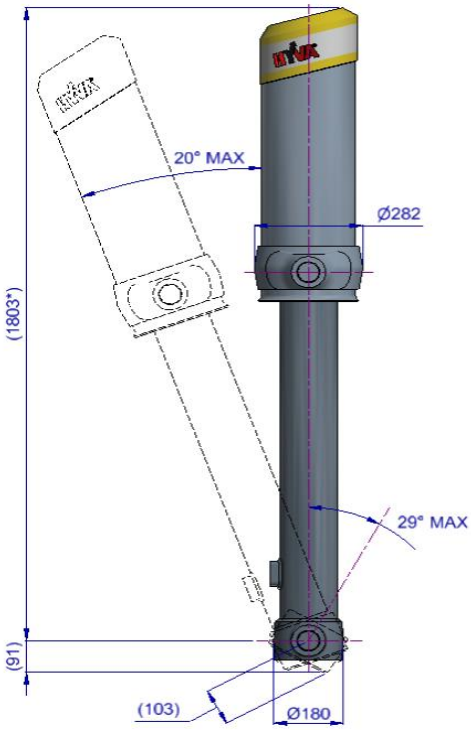

* incl. 20 [-5; +30] mm pull out

3D model is available on request or www.hyva.com

Specifications

Max. working pressure	250 bar
Weight	207 kg
Working volume	41 L
Total volume	45 L
Max. cyl. load (start tipping)	245 kN
Max. cyl. load (end of stroke)[2]	155 kN
Max. cyl. load (end of stroke)[3]	181 kN

Max. pump flow

With KO[1]	190 L/min
Without KO[1]	137 L/min
With KO[1] below -20°C	133 L/min
Without KO[1] below -20°C	96 L/min

Tipping time

With KO[1]	13 sec
Without KO[1]	18 sec
With KO[1] below -20°C	19 sec
Without KO[1] below -20°C	26 sec
Allowable lowering time	13 sec

Technical notes

● This cylinder is a lifting device only. ● It should not be used as a structural member and should not be subjected to side loads. ● Tipping valve must have a pressure relief at the cylinder port set not higher than max. working pressure. ● Verify max. cyl. load. ● Working temperature range is between -40°C and +80°C. ● Max. duration of extension is 0.5 hours (excluded hard chromed stages). ● Cylinder is painted black (RAL9005) with a min. thickness conforming to the 480 hours neutral salt spray test as per ISO 9227. ● [1] Hyva knock-off. ● [2] Unsubstantial unloading (sticky load). ● [3] Substantial unloading.

Related documentation

Bracket options:	015BRA10 & 015BRA12
Mounting instructions:	CYL-0030
Oil specifications:	OIL-0011
Spec sheet explanation:	CYL-0041

Configuration

Extension	1	2	3	4	5	6	7	Total
Effective diameter [mm]	129	110	91					4270
Stroke* [mm]	1410	1430	1430					

Tipping weight

For detailed tipping calculations please refer to: https://tipper.hyva.com

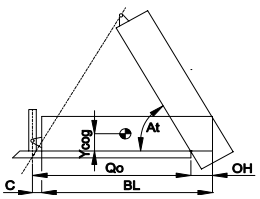

BL	body length
OH	rear overhang
Ycog	vert. pos. centre of gravity
Qo	pivot length
C	bracket length
At	tipping angle
	stroke x 60 / Qo

BL [mm]		5600			5450			5300	
OH [mm]	200	500	800	200	500	800	200	500	800
At [°]	45	48	51	47	50	53	48	51	55
Ycog [mm]									
600	45	50	58	46	52	60	47	53	63
900	49	55		50	57		51		
1200	53								

Tipping weight [ton] at maximum pressure of 250 bar for a vertically mounted cylinder and C is 229 mm

Subject to change without notice,
no rights reserved

FC A129-3-04270-004-K1050-HC

Pos.	Part no.	Description	Qty.
C01	71839040	DUST COVER FC LOW 15-244	1
C02	71706195	COVER 242-0735 PIN60 A340 FIX	1
C03	01702956K	WASHER M48 DIN 125B ZP	1
C04	01702907K	TOPNUT NYLOC M48x3 DIN 985 ZP	1
P01	74462651	PISTON FL3 S 091-1645-HC	1
P02	71853091K	SLIDER FL 091 (2 X 1/2) A22	1
P03	71851091K	OUTER STOPRING FL 091 A22	1
P04	71822091	BOTTOM PLATE PISTON FL 091	1
P05	01745012K	CIRCLIP 82 DIN 472 (87.5x2.5)	1
P06	71870215K	O-RING PISTON BOTTOM 091	1
P07	71848200	PISTON HEAD FL3 091	1
P08	01226430K	O-RING 72.62 X 3.53 MM	1

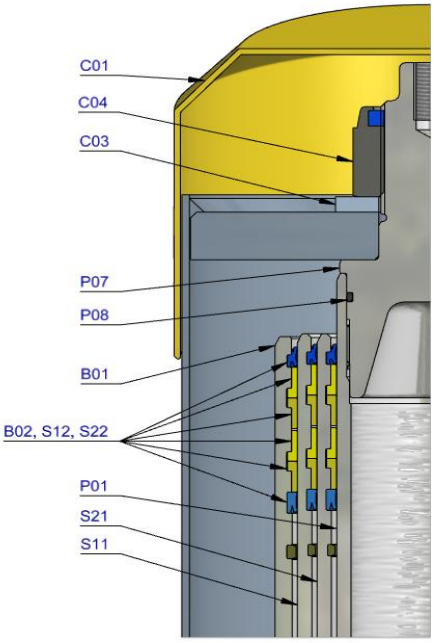

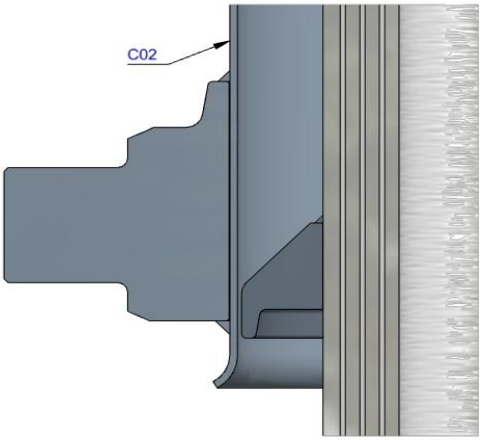

S21	74603651	STAGE FL2 110-1640-HC	1
S22	71802110K	PACKSET FL 110	1
S23	71853110K	SLIDER FL 110 (2 X 1/2) A22	1
S24	71851110K	OUTER STOPRING FL 110 A22	1
S25	71852110K	LIFTRING FL 110 A22	1
S11	74604651	STAGE FL2 129-1640-HC	1
S12	71802129K	PACKSET FL 129/HP 129	1
S13	71853129K	SLIDER FL 129 (2 X 1/2) A22	1
S14	71851129K	OUTER STOPRING FL 129 A22	1
S15	71852129K	LIFTRING FL 129 A22	1
B01	74505650R0635	BASE FL2 149-1679-4/4BSAE-190-C242	1
B02	71802149K	PACKSET FL 149/HP 150	1
B03	71825420	BOTTOM PLATE FL2 149	1
B04	71870030K	SEAL BOTTOM PLATE FL 149	1
B05	71820149	LOCKING PLATE FL 149	3
B06	01732055K	BOLT HEX M8X20X1.25 SET 6 PCS	1
B07	01732559K	WASHER SPRING M8 SET 6 PCS	1

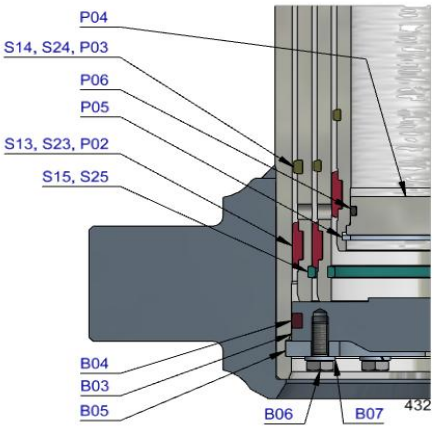

Seal kit complete

71908430K	Consists of all packsets with packset grease and O-rings

Notes

The inner stopring and piston bottom are pre-mounted on spare bases, stage and pistons. Therefore, when ordering new tubes, it is not required to order these parts separately.

For repair instructions see: CYL-0040. Serial no. is located on type plate and near type plate support.

Subject to change without notice,
no rights reserved