FC A129-3-03490-004-K0550-HC

Tipping weight 45 - 62 ton

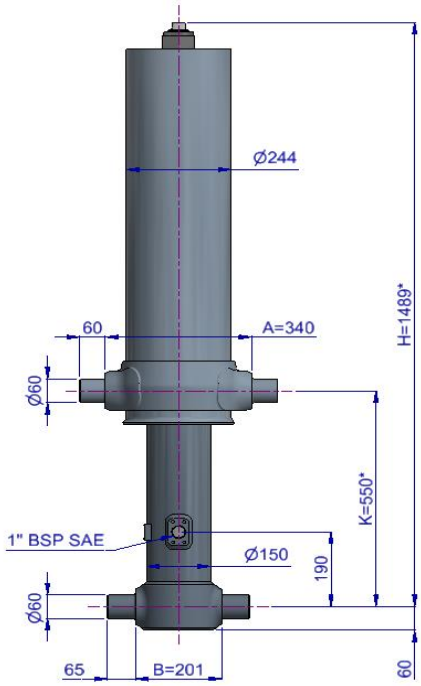


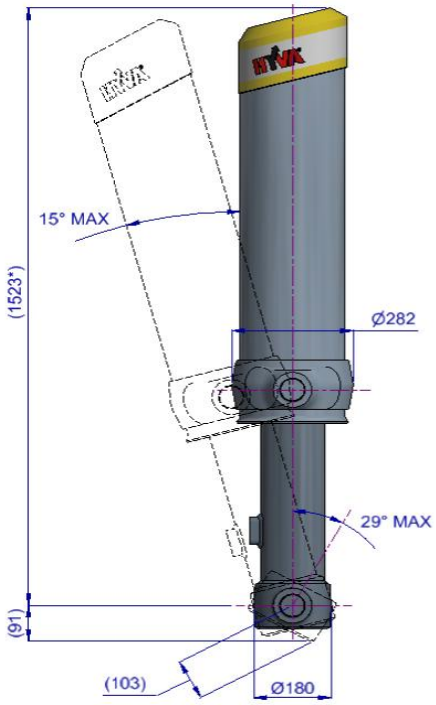


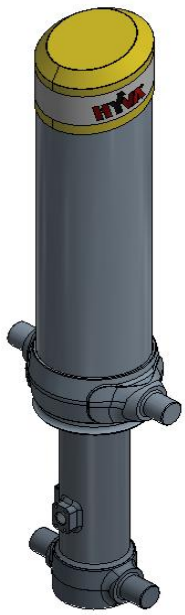

* incl. 20 [-5; +30] mm pull out

3D model is available on request or www.hyva.com

| Specifications | | Max. pump flow | | Tipping time | |
|---|---|---|---|---|---|
| Max. working pressure | 250 bar | With KO¹ | 190 L/min | With KO¹ | 11 sec |
| Weight | 191 kg | Without KO¹ | 137 L/min | Without KO¹ | 15 sec |
| Working volume | 34 L | With KO¹ below -20°C | 133 L/min | With KO¹ below -20°C | 16 sec |
| Total volume | 37 L | Without KO¹ below -20°C | 96 L/min | Without KO¹ below -20°C | 21 sec |
| Max. cyl. load (start tipping) | 245 kN | | | Allowable lowering time | 11 sec |

## Technical notes

● This cylinder is a lifting device only. ● It should not be used as a structural member and should not be subjected to side loads. ● Tipping valve must have a pressure relief at the cylinder port set not higher than max. working pressure. ● Verify max. cyl. load. ● Working temperature range is between -40°C and +80°C. ● Max. duration of extension is 0.5 hours (excluded hard chromed stages). ● Cylinder is painted black (RAL9005) with a min. thickness conforming to the 480 hours neutral salt spray test as per ISO 9227. ● ¹ Hyva knock-off.

## Related documentation

| | |
|---|---|
| Bracket options: | 015BRA10 & 015BRA12 |
| Mounting instructions: | CYL-0030 |
| Oil specifications: | OIL-0011 |
| Spec sheet explanation: | CYL-0041 |

## Configuration

| Extension | 1 | 2 | 3 | 4 | 5 | 6 | 7 | Total |
|---|---|---|---|---|---|---|---|---|
| Effective diameter [mm] | 129 | 110 | 91 | | | | | 3490 |
| Stroke* [mm] | 1150 | 1170 | 1170 | | | | | |

## Tipping weight

For detailed tipping calculations please refer to: https://tipper.hyva.com

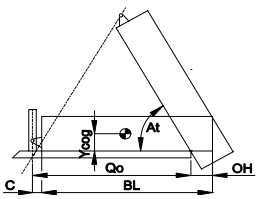


| | |
|---|---|
| BL | body length |
| OH | rear overhang |
| Ycog | vert. pos. centre of gravity |
| Qo | pivot length |
| C | bracket length |
| At | tipping angle |
| | *stroke x 60 / Qo* |

| BL [mm] | 4600 | | | 4400 | | | 4200 | |
|---|---|---|---|---|---|---|---|---|
| OH [mm] | 200 | 400 | 600 | 200 | 400 | 600 | 200 | 400 | 600 |
| At [°] | 45 | 47 | 49 | 47 | 49 | 52 | 49 | 52 | 55 |
| Ycog [mm] | | | | | | | | | |
| 400 | 45 | 49 | 54 | 46 | 51 | 57 | 47 | 53 | 60 |
| 700 | 49 | 55 | 62 | 51 | 58 | | 54 | | |
| 1000 | 55 | | | | | | | | |

Tipping weight [ton] at maximum pressure of 250 bar for a vertically mounted cylinder and C is 229 mm


Subject to change without notice,
no rights reserved

FC A129-3-03490-004-K0550-HC

| Pos. | Part no. | Description | Qty. |
|---|---|---|---|
| C01 | 71839040 | DUST COVER FC LOW 15-244 | 1 |
| C02 | 71706279 | COVER 242-0955 PIN60 A340 FIX | 1 |
| C03 | 01702956K | WASHER M48 DIN 125B ZP | 1 |
| C04 | 01702907K | TOPNUT NYLOC M48x3 DIN 985 ZP | 1 |
| P01 | 74462371 | PISTON FL3 S 091-1365-HC | 1 |
| P02 | 71853091K | SLIDER FL 091 (2 X 1/2) A22 | 1 |
| P03 | 71851091K | OUTER STOPRING FL 091 A22 | 1 |
| P04 | 71822091 | BOTTOM PLATE PISTON FL 091 | 1 |
| P05 | 01745012K | CIRCLIP 82 DIN 472 (87.5x2.5) | 1 |
| P06 | 71870215K | O-RING PISTON BOTTOM 091 | 1 |
| P07 | 71848200 | PISTON HEAD FL3 091 | 1 |
| P08 | 01226430K | O-RING 72.62 X 3.53 MM | 1 |

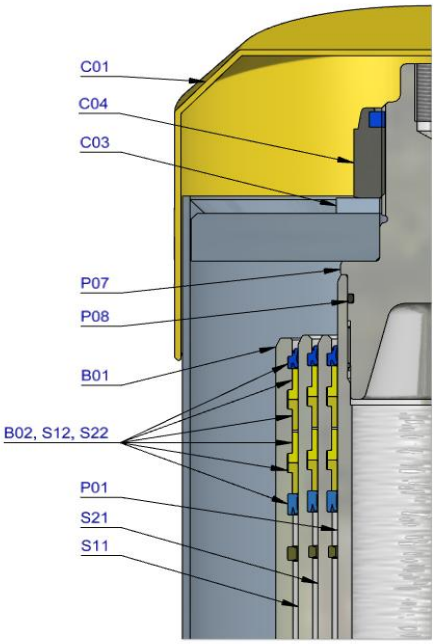


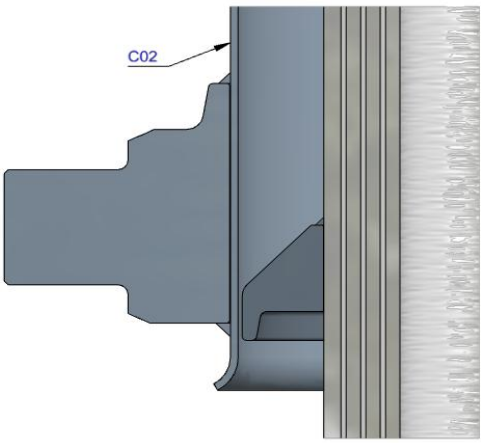


| | | | |
|---|---|---|---|
| S21 | 74603371 | STAGE FL2 110-1360-HC | 1 |
| S22 | 71802110K | PACKSET FL 110 | 1 |
| S23 | 71853110K | SLIDER FL 110 (2 X 1/2) A22 | 1 |
| S24 | 71851110K | OUTER STOPRING FL 110 A22 | 1 |
| S25 | 71852110K | LIFTRING FL 110 A22 | 1 |
| S11 | 74604371 | STAGE FL2 129-1360-HC | 1 |
| S12 | 71802129K | PACKSET FL 129/HP 129 | 1 |
| S13 | 71853129K | SLIDER FL 129 (2 X 1/2) A22 | 1 |
| S14 | 71851129K | OUTER STOPRING FL 129 A22 | 1 |
| S15 | 71852129K | LIFTRING FL 129 A22 | 1 |
| B01 | 74505370R0855 | BASE FL2 149-1399-4/4BSAE-190-C242 | 1 |
| B02 | 71802149K | PACKSET FL 149/HP 150 | 1 |
| B03 | 71825420 | BOTTOM PLATE FL2 149 | 1 |
| B04 | 71870030K | SEAL BOTTOM PLATE FL 149 | 1 |
| B05 | 71820149 | LOCKING PLATE FL 149 | 3 |
| B06 | 01732055K | BOLT HEX M8X20X1.25 SET 6 PCS | 1 |
| B07 | 01732559K | WASHER SPRING M8 SET 6 PCS | 1 |

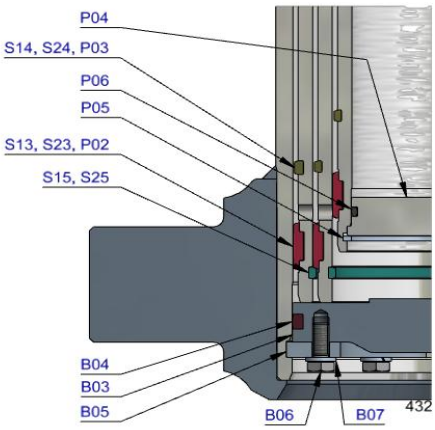


## Seal kit complete

| | |
|---|---|
| 71908430K | Consists of all packsets with packset grease and O-rings |

## Notes

The inner stopring and piston bottom are pre-mounted on spare bases, stage and pistons. Therefore, when ordering new tubes, it is not required to order these parts separately.

For repair instructions see: CYL-0040. Serial no. is located on type plate and near type plate support.


Subject to change without notice,
no rights reserved