2.15 **Lista parti di ricambio** *2.15* ***Spare parts list*** 2.15 **Ersatzteilliste**

TA..B - TC..B - TF..B

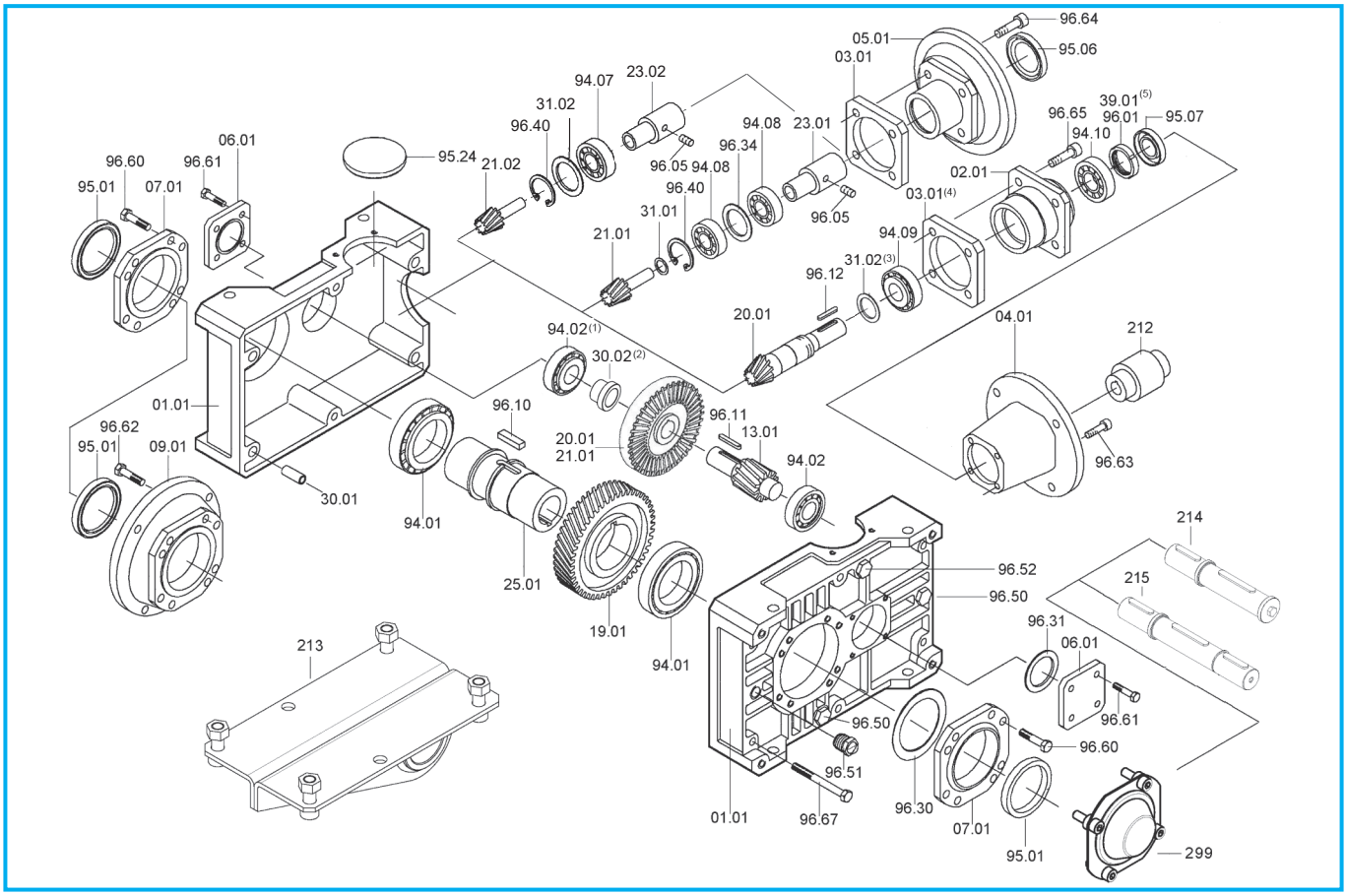

T	Cuscinetti/ *Bearings* / Lager						Anelli di tenuta / *Oilseals* / Öldichtungen			
	TA - TC - TF		TC		TA - TF		TA - TC - TF	TC		TA - TF
	94.01	94.02	94.07	94.08	94.09	94.10	95.01	IEC	95.06	95.07
71B	**32008** 40/68/19	**30302** 15/42/14.25	**3203** 17/40/17.5 (i= 50, 63, 80)	**7203** 17/40/12	**30203** 17/40/13.25		40/56/8	**63**	**25/52/7**	**15/40/10**
								71	**30/52/7**	
								80	**35/52/7**	
								90	**37/52/8**	
90B	**32010** 50/80/20	**30204** 20/47/15.25	**3205** 25/52/20.6 (i= 50, 63, 80)	**7205** 25/52/15	**32005** 25/47/15		50/65/8	71 - 80	**35/62/7**	**20/47/7**
								90	**40/62/7**	
								100 - 112	**45/62/8**	
112B	**32012** 60/95/23	**30305** 25/62/18.25	**3206** 30/62/23.8 (i= 50, 63, 80)	**7206** 30/62/16	**32006** 30/55/17		60/80/10	80 - 90	**40/72/7**	**25/58/10**
								100 - 112	**45/72/8**	
								132	**55/72/10**	
140B	**32015** 75/115/25	**32206B** 30/62/21.25	**3207** 35/72/27 (i= 50, 63, 80)	**7207** 35/72/17	**32007** 35/62/18		75/95/10	80 - 90	**45/80/10**	**30/62/7**
								100 - 112	**45/80/10**	
								132	**55/80/10**	
								160	**60/80/8**	
								180	**65/80/8**	
180B	**32019** 95/145/32	**31307** 35/80/22.75	—	**7209** 45/85/19	**33109** 45/80/26		95/125/12	100 - 112	**55/100/13**	**40/80/10**
								132 - 160	**60/100/10**	
		32208 (1) 40/80/24.75						180	**65/100/10**	
								200	**75/100/10**	
200B	**32024** 120/180/38	**31309** 45/100/27.25	—	**7209** 45/85/19	**33109** 45/80/26		120/160/15	100 - 112	**55/100/13**	**40/80/10**
								132 - 160	**60/100/10**	
								180	**65/100/10**	
								200	**75/100/10**	
225B	**32026** 130/200/45	**31310** 50/110/29.25	—	—	**33211** 55/100/35		130/160/12	—	—	**75/100/10**

(1) Presente solo nella versione con antiretro / *Only on version with back stop device* / Nur für die Version mit Rücklaufsperre
(2) Solo per T200B / *Only for T200B* / Nur fur T200B
(3) Solo per T225B i=16 - 40 (no per i = 8 - 12.5) / *Only for T225B i = 16- 40 (not for i = 8 - 12.5)* / Nur fur T225B i= 16- 40 (Nicht fur i = 8 - 12.5)
(4) Non presente nel T225B / *Not on T225B* / Nicht vorhanden fur T225B
(5) Solo per T225B / *Only for T225B* / Nur fur T225B