fatra

WELL-click

LAYING REGULATION WELL-CLICK

PN 5414/2010

WELL-CLICK
Installation and Maintenance Manual

PRIOR TO INSTALLATION

The WELL-click floor covering is usually installed as a floating floor, i.e. it is not glued to the base, on a clean, dry, flat surface without cracks that will be treated with a suitable pouring screed. In such a case, it is installed directly on a steam-proof PE foil with a thickness of 0.25 mm, which serves as a system gliding pad. Alternatively, WELL-click may be glued to a base treated with a pouring screed using a suitable glue for LVT tiles. It can be laid on flat and plain floors of ceramic tiles or natural stone, wooden planks and chipboard, and on all types of mineral underlay. We suggest removing carpets for hygienic reasons. The underlay must not include substances such as softeners or solvents.
The maximum permissible unevenness of the base must not exceed 2 mm per 1 m of length (under DIN 18202, line 4), otherwise a pouring screed needs to be applied. The residual humidity must not exceed 2.0 CM. Prior to installation, it is necessary to acclimatise the floor covering at a room temperature of 15-25 °C and relative humidity of 40-60% for a period of 24 hours in closed packaging stored flat. WELL-click can also be installed on hot-water or electric floor heating with the maximum temperature of the base being 28 °C. The condition of the floor tiles needs to be checked in daylight; any defects or damage, e.g. occurring during transportation, must be claimed for before installation of the floor covering. Colour or structural differences of the material are not a reason for a claim. Prior to installation, please check whether the tongues and grooves are free of chips and other impurities. WELL-click floor covering is suitable for installation in rooms with increased humidity and in bathrooms. Full-area bonding is recommended on such surfaces.

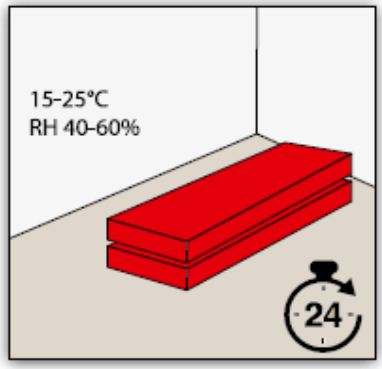

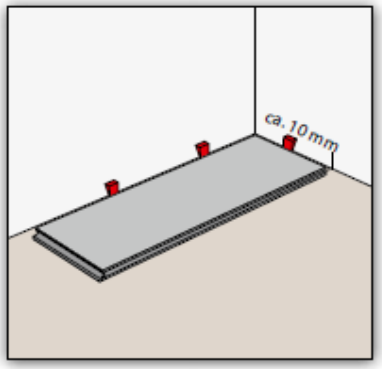

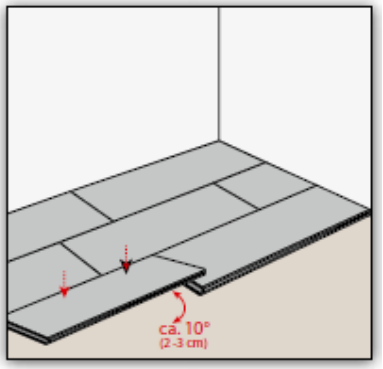

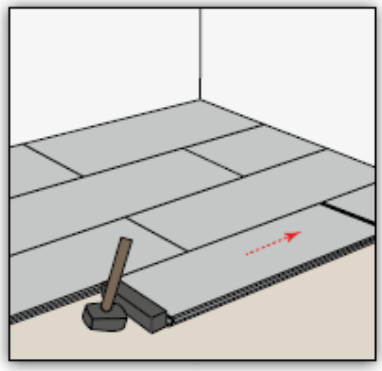

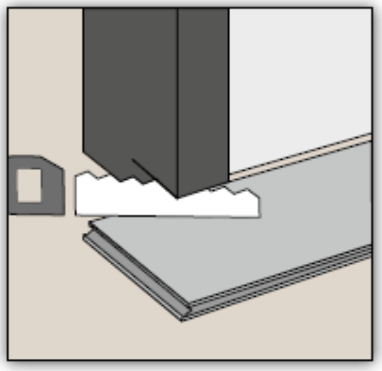

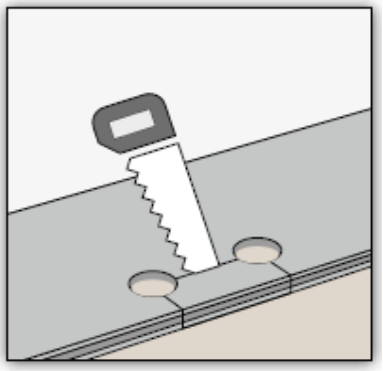

INSTALLATION

Start laying in the corner and leave a 10 mm expansion joint between the wall and the adjacent solid structural component. Lay the following tiles in direct relation to the first one. The remaining part of the tile from the first row is used as the first piece in the second row. This tile must be at least 30 cm long.
To cut tiles, a portable circular saw, jigsaw or laminate cutter is recommended. Connect the tile locks at a slight angle of about 10 ° by pressing and gentle swinging. On the front, the tile locks are connected by light tapping.
Always fit the lock tongue (min. 20 cm long) to the bottom jaw of the lock joint groove.
The maximum permissible area without other expansion joints is 10x10 m. For pipe penetrations, drill a hole approximately 20 mm larger than the diameter of the pipe itself and, once installed, cover the gap with a rosette. Shorten the door casing accordingly to allow floating tiles to freely slide under them. Use Fatra skirting along the walls.

CLEANING AND MAINTENANCE

The service life of the floor depends to a great extent on its use, cleaning and maintenance. For the primary maintenance of WELL-click, apply a thin and even basic protective coat. Depending on traffic intensity, regular maintenance is required. Use suitable cleaning agents for regular cleaning (e.g. Uzin, Dr. Schutz, LOBA brands, etc.). We recommend using a cleaning mat or rug to collect dirt at the entrance from common areas or from the exterior. Protect the floor using suitable pads on table and chair legs (soft plastic/felt).

INFO

WELL-click is a thermoplastic material, therefore it responds to heat and cold. This means that it expands when exposed to heat (e.g. sunlight) and shrinks in the cold. Protect the floor from intense direct sunlight using shading, and install the flooring so that the tiles can move freely. The quality rating of installed flooring is carried out under ČSN 49 2120, PN 5414/2010.

Fatra, a. s.
třída Tomáše Bati 1541
Napajedla
Czech Republic

www.fatrafloor.cz
podlahy@fatra.cz
floor@fatra.cz

+420 577 501 111

1st edition
11/2019