2.15 **Lista parti di ricambio** *2.15* ***Spare parts list*** 2.15 **Ersatzteilliste**

TA..C - TC..C - TF..C

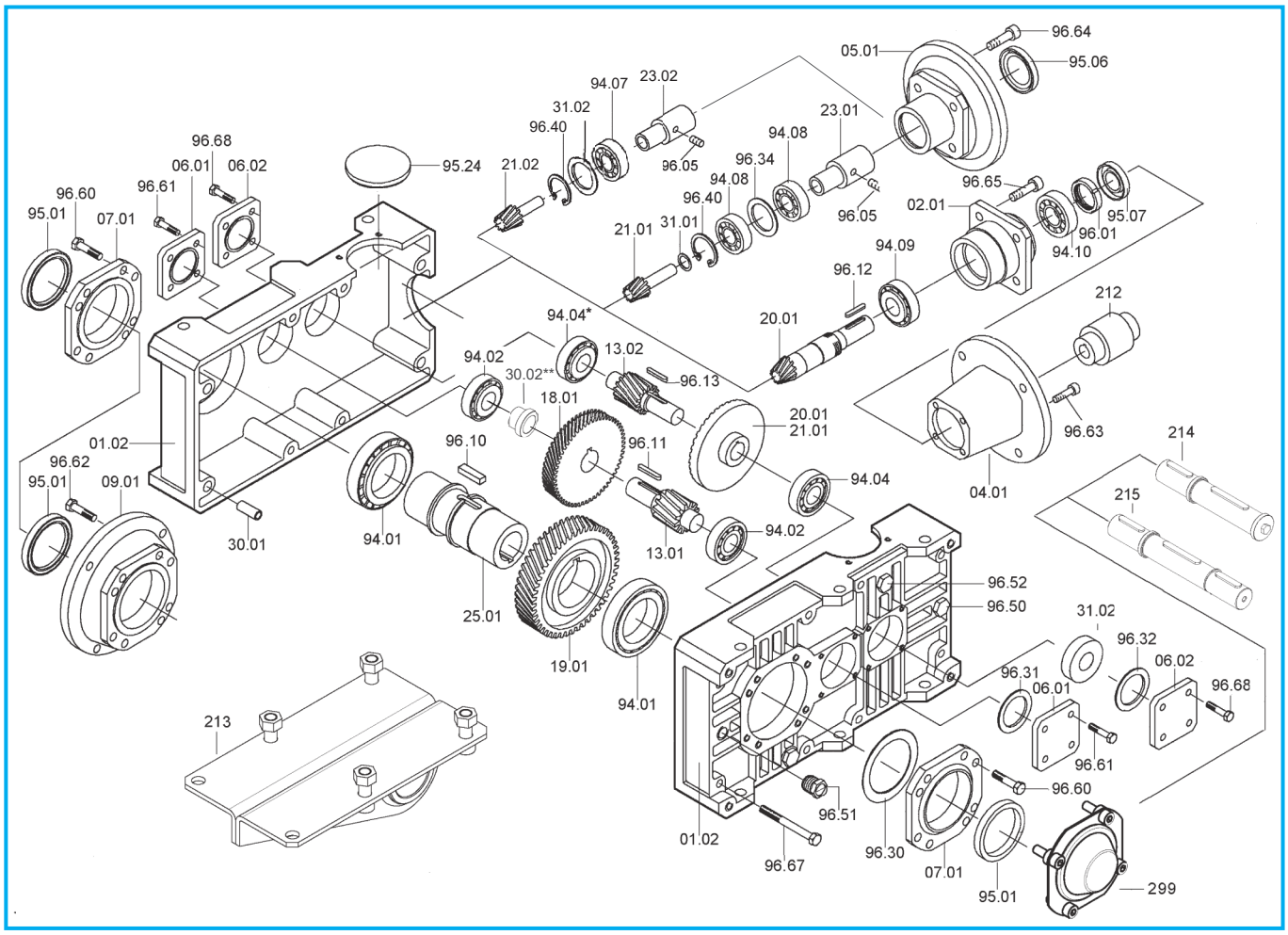

T	Cuscinetti/ *Bearings* / Lager							Anelli di tenuta / *Oilseals* / Öldichtungen			
	TA - TC - TF			TC		TA - TF		TA - TC - TF	TC		TA - TF
	94.01	94.02	94.04	94.07	94.08	94.09	94.10	95.01	IEC	95.06	95.07
80C	**32010** 50/80/20	**30204** 20/47/15.25	**30302** 15/42/14.25	**3203** 17/40/17.5 (i= 250, 315, 400, 500, 630)	**7203** 17/40/12	**30203** 17/40/13.25		50/65/8	**63** 71 **80** 90	**25/52/7** **30/52/7** **35/52/7** **37/52/8**	**15/40/10**
100C	**32012** 60/95/23	**30305** 25/62/18.25	**30204** 20/47/15.25	**3205** 25/52/20.6 (i= 250, 315, 400, 500, 630)	**7205** 25/52/15	**32005** 25/47/15		60/80/10	71 - 80 90 100 - 112	**35/62/7** **40/62/7** **45/62/8**	**20/47/7**
125C	**32015** 75/115/25	**32206** 30/62/21.25	**30305** 25/62/18.25	**3206** 30/62/23.8 (i= 250, 315, 400, 500, 630)	**7206** 30/62/16	**32006** 30/55/17		75/95/10	80 - 90 100 - 112 132	**40/72/7** **45/72/8** **55/72/10**	**25/58/10**
160C	**32019** 95/145/32	**32207** 35/72/24.25	**32206** 30/62/21.25	**3207** 35/72/27 (i= 250, 315, 400, 500, 630)	**7207** 35/72/17	**32007** 35/62/18		95/125/12	80 - 90 100 - 112 132 160 180	**45/80/10** **45/80/10** **55/80/10** **60/80/8** **65/80/8**	**30/62/7**
180C	**32024** 120/180/38	**31309** 45/100/27.25	**32206B** 30/62/21.25	**3207** 35/72/27 (i= 250, 315, 400)	**7207** 35/72/17	**32007** 35/62/18		120/160/15	80 - 90 100 - 112 132 160 180	**45/80/10** **45/80/10** **55/80/10** **60/80/10** **65/80/10**	**30/62/7**
200C	**32026** 130/200/45	**31310** 50/110/29.25	**30307** 35/80/22.75 * **32208** 40/80/24.75	—	**7209** 45/85/38	**33109** 45/80/26		130/160/12	100 - 112 132 - 160 180 200	**55/100/13** **60/100/10** **65/100/10** **75/100/10**	**40/80/10**

* Presente solo nella versione con antiretro / *Only on version with back stop device* / Nur für die Version mit Rücklaufsperre
** Solo per T180C / *Only for T180C* / Nur fur T180C