Схематичне креслення:

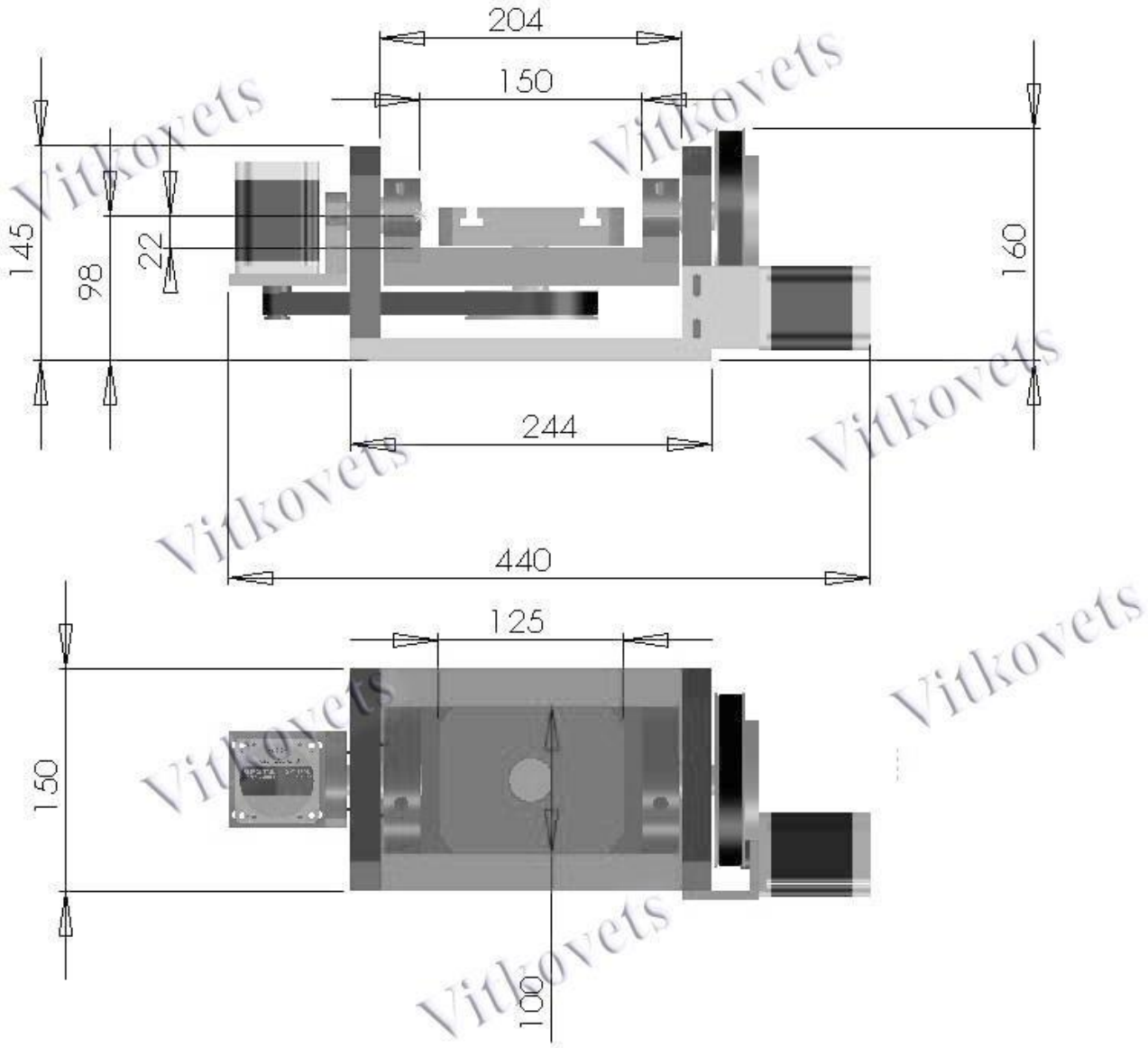

HYBRID STEPPER MOTOR TYPE 57HS76-3004A08-D25-03

SPECIFICATIONS				diagram
step angle	1.8° ±5%	voltage	4.2V	
phase No.	2	current	3.0A	
insulation resistance	100MOhm(500V DC)	inductance	3.5±20%mH	
insulation class	B	resistance	1.4±10%Ω	
weight	Kg	holding torque	18kg.cm	

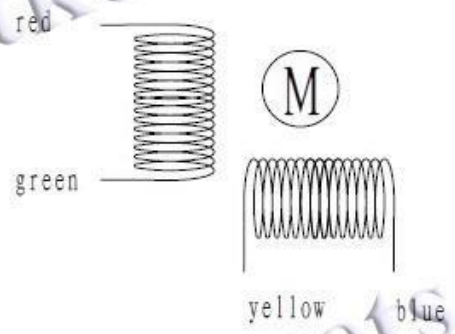

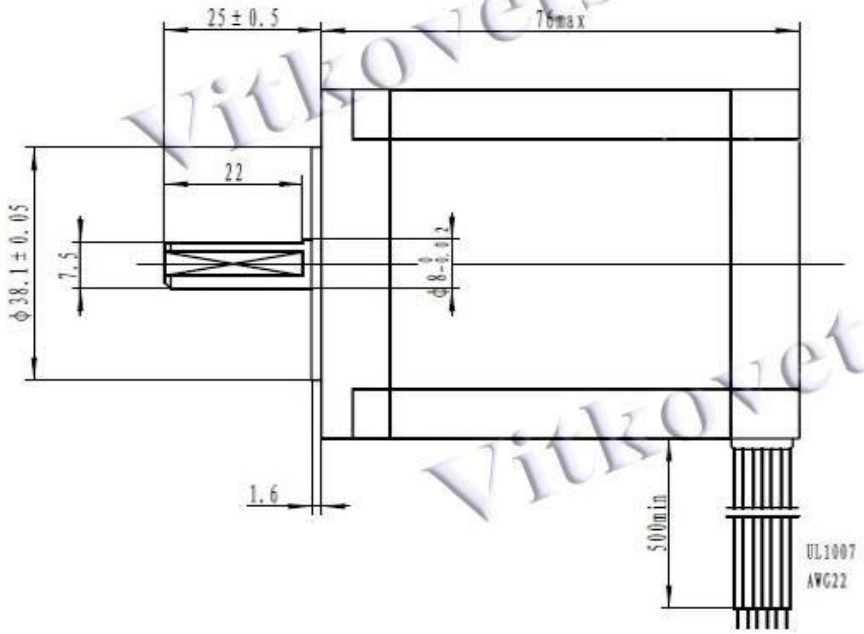

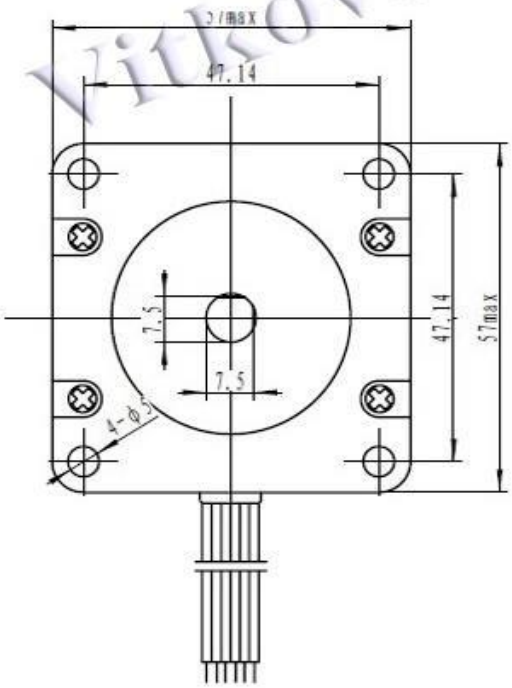

Vitkovets