奥 德 利 ®
AUDLEY

FQF2N60C

600V N-Channel MOSFET

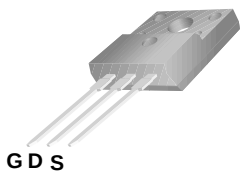

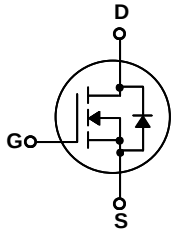

TO-220F

G-Gate,D-Drain,S-Sourse

Features

- ☐ Low Intrinsic Capacitances
- ☐ Excellent Switching Characteristics
- ☐ Extended Safe Operating Area
- ☐ Unrivalled Gate Charge :Qg= 8.5nC (Typ.)
- ☐ BVDSS=600V,ID=2A
- ☐ $R_{DS(on)}$: 5 Ω (Max) @VG=10V
- ☐ 100% Avalanche Tested

Absolute Maximum Ratings *Tc=25℃ unless other wise noted*

Symbol	Parameter		Units
V_{DSS}	Drain-Sourse Voltage	600	V
I_D	Drain Current -continuous (Tc=25℃)	2*	A
	-continuous (Tc=100℃)	1.5*	A
V_{GS}	Gate-Sourse Voltage	±30	V
E_{AS}	Single Plused Avanche Energy (Note1)	120	mJ
I_{AR}	Avalanche Current (Note2)	2	A
P_D	Power Dissipation (Tc=25℃)	23	W
T_J,T_{STG}	Operating and Storage Temperature Range	-55 ~ +150	℃
TL	Maximum lead temperature for soldering purpose,1/8” from case for 5 seconds	300	℃

Thermal Characteristics

Symbol	Parameter	Typ.	Max	Units
$R_{\theta JC}$	Thermal Resistance,Junction to Case	--	4.46	℃/W
$R_{\theta JA}$	Thermal Resistance,Junction to Ambient	--	62.5	℃/W

* Drain current limited by maximum junction temperature.

Electrical Characteristics Tc=25℃ unless other wise noted

Symbol	Parameter	Test Condition	Min.	Typ.	Max	Units
Off Characteristics						
BV_{DSS}	Drain-Sourse Breakdown Voltage	ID=250μA，VGS=0	600	--	--	V
$\triangle BV_{DSS}/\triangle T_J$	Breakdown Voltage Temperature Conficient	I_D=250μA,Reference to 25℃	--	0.4	--	V/℃
IDSS	Zero Gate Voltage Drain Current	Vds=600V, Vgs=0V	--	--	1	μA
		Vds=480V, Tc=125℃			10	μA
IGSSF	Gate-body leakage Current, Forward	Vgs=+30V, Vds=0V	--	--	100	nA
IGSSR	Gate-body leakage Current, Reverse	Vgs=-30V, Vds=0V	--	--	-100	nA
On Characteristics						
$V_{GS(th)}$	Date Threshold Voltage	Id=250uA,Vds=Vgs	2	--	4	V
$R_{DS(on)}$	Static Drain-Sourse On-Resistance	Id=1A,Vgs=10V	--	--	5	Ω
Dynamic Characteristics						
Ciss	Input Capacitance	VDS=25V，VGS=0，f=1.0MHz	--	270	350	pF
Coss	Output Capacitance		--	40	50	pF
Crss	Reverse Transfer Capacitance		--	5	7	pF
Switching Characteristics						
Td(on)	Turn-On Delay Time	VDD=300V，ID=2A RG=25Ω (Note 3,4)	--	10	30	nS
Tr	Turn-On Rise Time		--	25	60	nS
Td(off)	Turn-Off Delay Time		--	20	50	nS
Tf	Turn-Off Fall Time		--	25	60	nS
Qg	Total Gate Charge	VDS=480,VGS=10V，ID=2A (Note 3,4)	--	90	11	nC
Qgs	Gate-Sourse Charge		--	1.6	--	nC
Qgd	Gate-Drain Charge			4.3	--	nC
Drain-Sourse Diode Characteristics and Maximum Ratings						
I_S	Maximun Continuous Drain-Sourse Diode Forward Current		--	--	2	A
I_{SM}	Maximun Plused Drain-Sourse DiodeForwad Current		--	--	8	A
V_{SD}	Drain-Sourse Diode Forward Voltage	Id=2A	--	--	1.5	V
trr	Reverse Recovery Time	I_S=2A,V_{GS} =0V di_F/dt=100A/μs (Note3)	--	180	--	nS
Qrr	Reverse Recovery Charge		--	0.72	--	μC

*Notes

1, L=55mH, IAS=2.0A, VDD=50V, RG=25Ω, Starting TJ =25°C

2, Repetitive Rating : Pulse width limited by maximum junction temperature

3, Pulse Test : Pulse Width ≤ 300μs, Duty Cycle ≤ 2%

4, Essentially Independent of Operating Temperature

Typical Characteristics

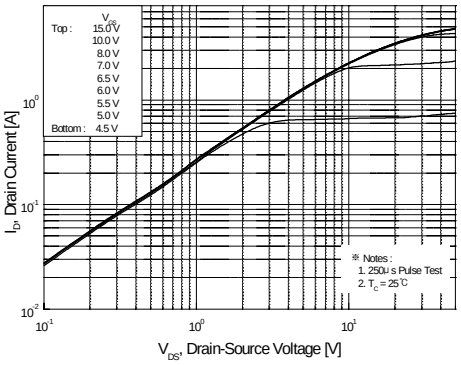

Figure 1. On-Region Characteristics

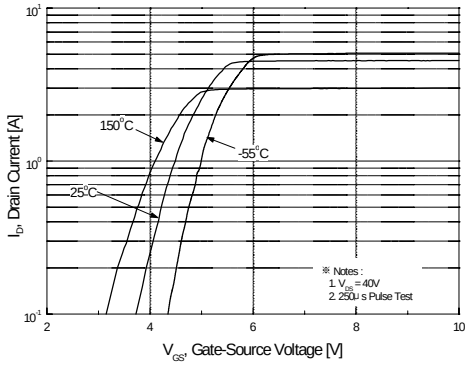

Figure 2. Transfer Characteristics

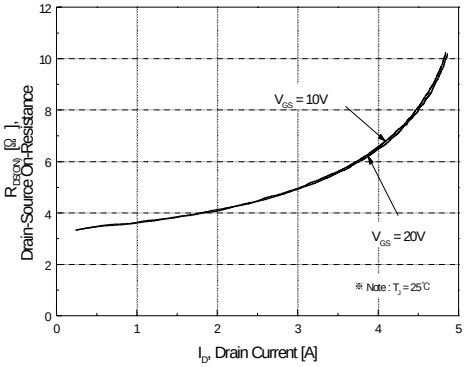

Figure 3. On-Resistance Variation vs Drain Current and Gate Voltage

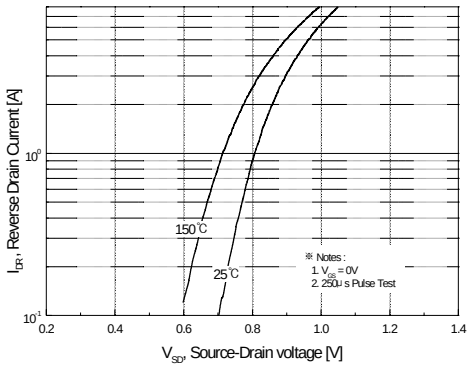

Figure 4. Body Diode Forward Voltage Variation with Source Current and Temperature

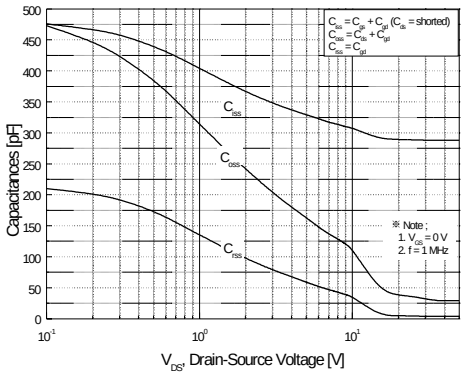

Figure 5. Capacitance Characteristics

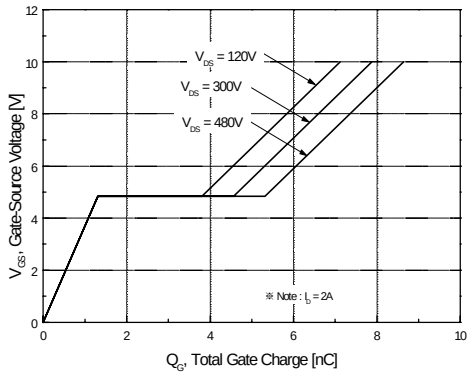

Figure 6. Gate Charge Characteristics

Typical Characteristics (Continued)

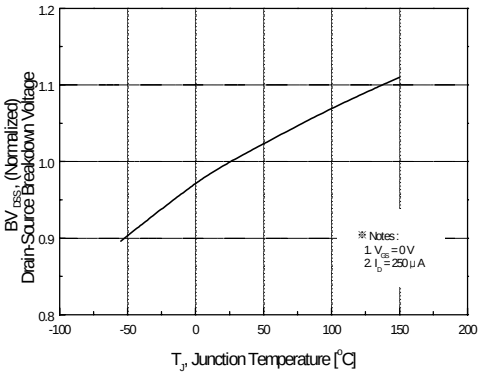

Figure 7. Breakdown Voltage Variation vs Temperature

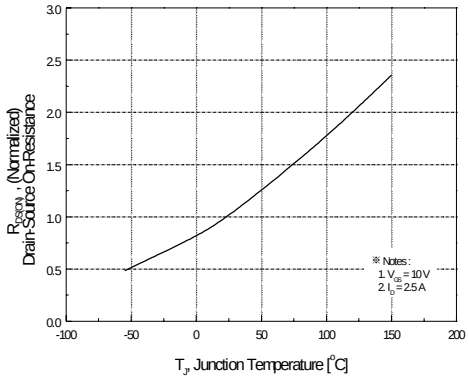

Figure 8. On-Resistance Variation vs Temperature

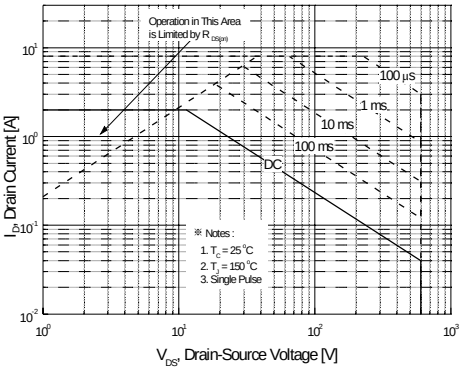

Figure 9-2. Maximum Safe Operating Area

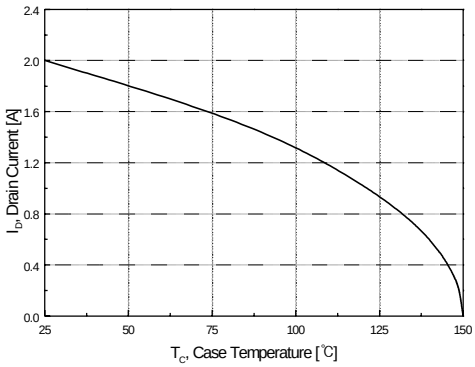

Figure 10. Maximum Drain Current vs Case Temperature

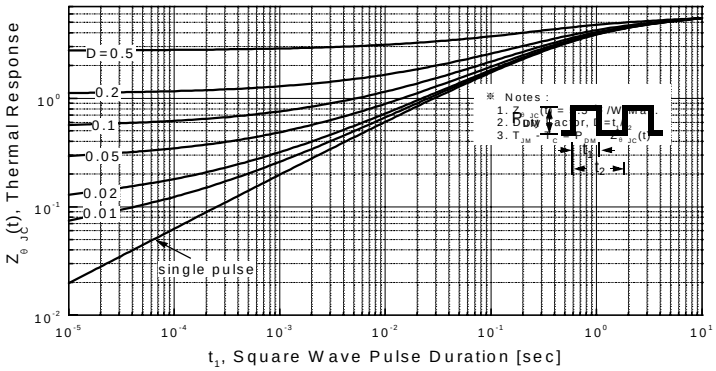

Figure 11-2. Transient Thermal Response Curve

Gate Charge Test Circuit & Waveform

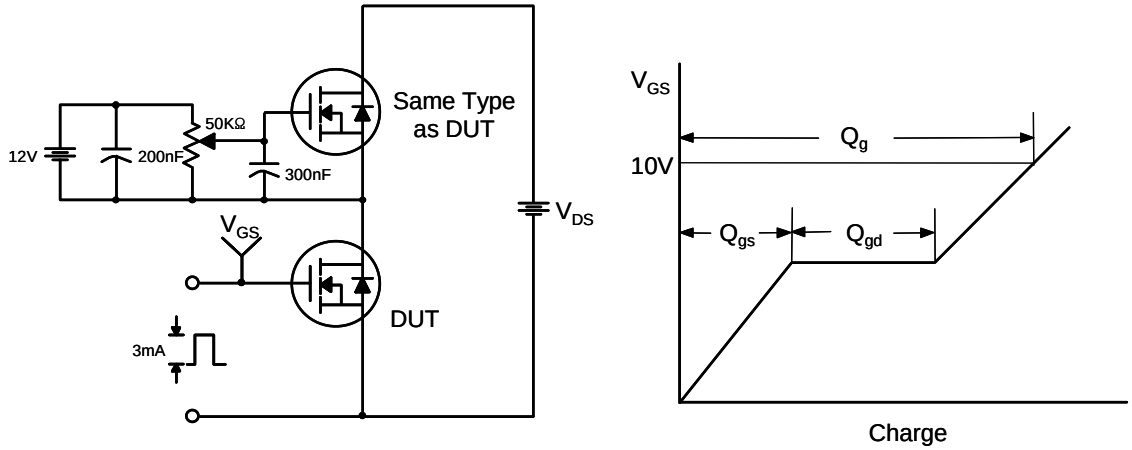

Resistive Switching Test Circuit & Waveforms

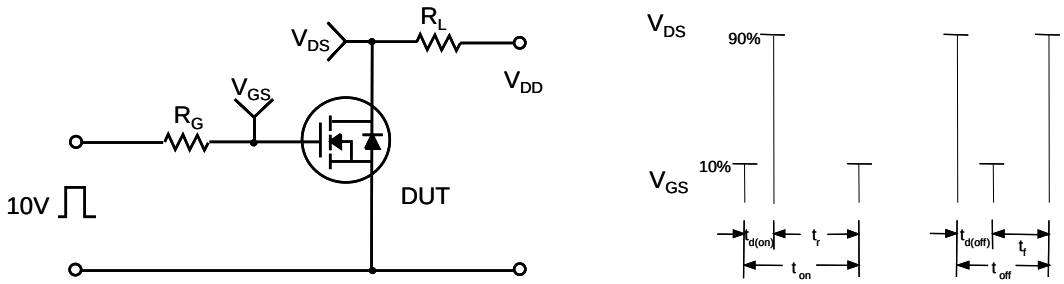

Unclamped Inductive Switching Test Circuit & Waveforms

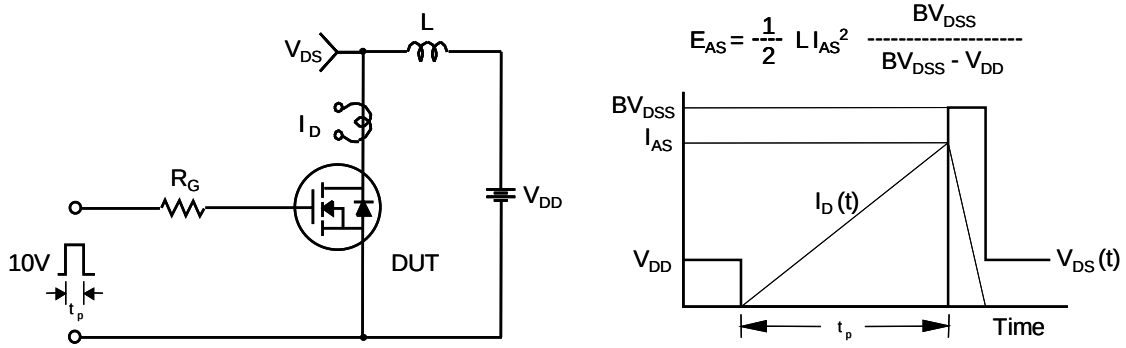

Peak Diode Recovery dv/dt Test Circuit & Waveforms

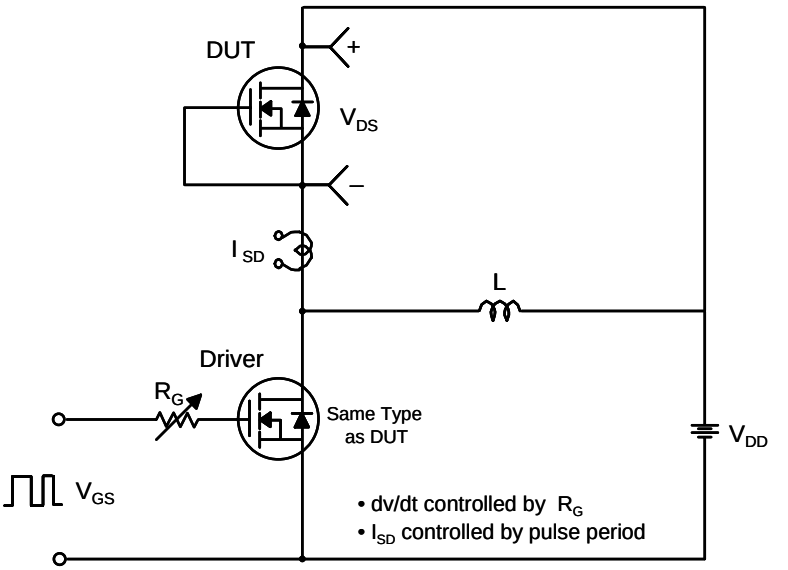

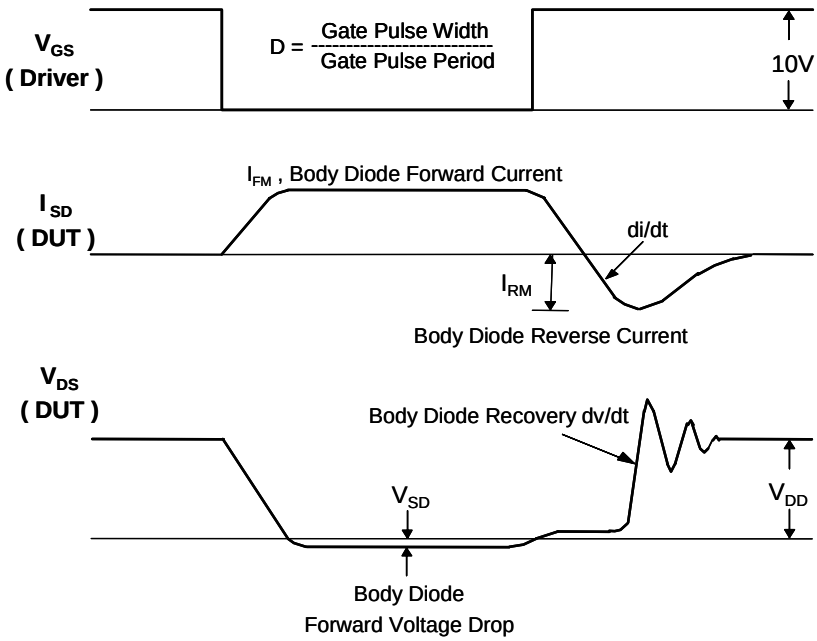

Package Dimension

TO-220F

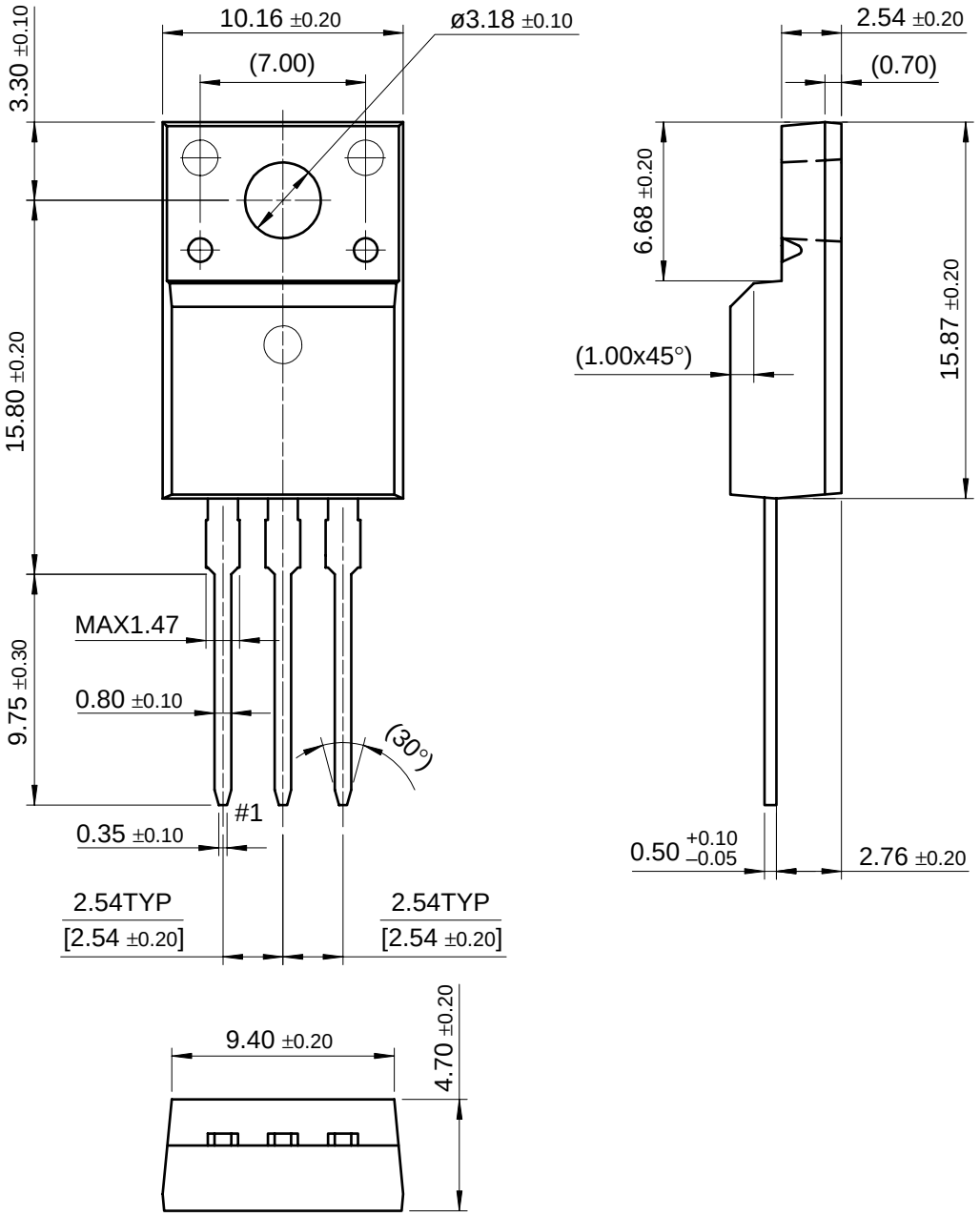

Dimensions in Millimeters