Level sensor
For industrial applications, stainless steel version
Model RLT-1000

Applications

- Level measurement of liquids in machine building
- Control and monitoring tasks for hydraulic power packs, compressors and cooling systems.

Special features

- Media compatibility: Oil, water, diesel, refrigerants and other liquids
- Permissible medium temperature range: -30 ... +120 °C [-22 ... +248 °F]
- Output signal: Resistance in a 3-wire potentiometer circuit, current output 4 ... 20 mA
- Measuring principle: Reed-chain technology
- Accuracy, resolution: 24 mm [0.9 in], 12 mm [0.5 in], 10 mm [0.4 in], 6 mm [0.2 in] or 3 mm [0.1 in]

Fig. left: Mounting thread, angular connector
Fig. right: Mounting thread, circular connector M12 x 1

Description

The model RLT-1000 level sensor has been developed for measuring the levels of liquids. The stainless steel used is suitable for a multitude of media, such as, for example, oil, water, diesel and refrigerants.

Measuring principle
A permanent magnet built into the float triggers, with its magnetic field, the resistance measuring chain built into the guide tube. The entire assembly corresponds to a 3-wire potentiometer circuit. The measured resistance signal is proportional to the level. The model RLT-1000 is optionally available with a 4 ... 20 mA analogue output.

Data sheets showing similar products:
Level sensor, plastic version; model RLT-2000; see data sheet LM 50.02
Level sensor with temperature measurement, stainless steel version; model RLT-3000; see data sheet LM 50.05

Part of your business

Specifications

Level sensor, model RLT-1000	
Measuring principle	Reed-chain technology with optional analogue amplifier
Measuring range M	The measuring range is determined from the selected guide tube length L and the position of the 100 % mark. For dimensions see drawing
Guide tube length L	150 ... 1,500 mm [6 ... 59 in], greater lengths on request
Output signal	■ Variable resistance The overall resistance of the reed chain is approx. 1 ... 10 kΩ, depending on the measuring range Max. voltage < DC 40 V ■ Current output, 4 ... 20 mA, 2-wire Power supply: DC 12 ... 32 V Load in Ω: ≤ (power supply - 12 V) / 0.02 A
Accuracy, resolution	■ 24 mm [0.9 in] 1) ■ 12 mm [0.5 in] 2) ■ 10 mm [0.4 in] 3) ■ 6 mm [0.2 in] 2) ■ 3 mm [0.1 in] 2)
Mounting position	Vertical ±30°
Process connection	■ G 1, installation from outside ■ G 1 ½, installation from outside ■ G 2, installation from outside ■ Flange DN 50, form B per DIN 2527/EN 1092, PN 16, installation from outside ■ G ⅜, installation from inside 4) ■ G ½, installation from inside 4) ■ G ¼, installation from inside 4)
Material ■ Wetted ■ Non-wetted	Process connection, guide tube: Stainless steel 1.4571 (316Ti) Float: See table on page 3 Case: Stainless steel 1.4571 (316Ti) Electrical connection: See table below
Permissible temperatures ■ Medium ■ Ambient ■ Storage	-30 … +80 °C [-22 … +176 °F], option: -30 … +120 °C [-22 … +248 °F] 5) -30 … +80 °C [-22 … +176 °F] -30 … +80 °C [-22 … +176 °F]

Electrical connections 6)	Ingress protection 7)	Material	Cable length
Angular connector DIN 175301-803 A	IP65	PA	-
Circular connector M12 x 1 (4-pin)	IP65	TPU, brass	
Cable outlet	IP67	PVC	■ 2 m [6.5 ft] ■ 5 m [16.4 ft] other lengths on request
Cable outlet	IP67	PUR	
Cable outlet	IP67	Silicone	
Connection housing "standard" Dimensions: 75 x 80 x 57 mm [3.0 x 3.1 x 2.2 in] For cable diameter: 5 ... 10 mm [0.2 ... 0.4 in]	IP66	Aluminium, glands from polyamide, brass, stainless steel	-
Connection housing „compact" Dimensions: 58 x 64 x 36 mm [2.3 x 2.5 x 1.4 in] For cable diameter: 5 ... 10 mm [0.2 ... 0.4 in]	IP66		

1) Not with float diameter 30 mm [1.2 in] or 25 mm [1.0 in]
2) Not with float diameter 30 mm [1.2 in]
3) Only with float diameter 30 mm [1.2 in]
4) Only with cable outlets
5) Not with cable material: PVC, PUR; float outer diameter Ø D = 30 mm [1.2 in]; not with connection housing 58 x 64 x 36 mm [2.3 x 2.5 x 1.4 in]
6) Cable outlets not available with current output 4 ... 20 mA
7) The stated ingress protection (per IEC/EN 60529) only applies when plugged in using mating connectors that have the appropriate ingress protection.

Float	Form	Outer diameter Ø D	Height H	Operating pressure	Medium temperature	Density	Material
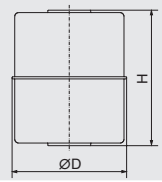	Cylinder [1]	44 mm [1.7 in]	52 mm [2.0 in]	≤ 16 bar [≤ 232 psi]	≤ 120 °C [≤ 248 °F]	≥ 750 kg/m³ [46.8 lbs/ft³]	1.4571 (316Ti)
	Cylinder [2]	30 mm [1.2 in]	36 mm [1.4 in]	≤ 10 bar [≤ 145 psi]	≤ 80 °C [≤ 176 °F]	≥ 850 kg/m³ [53.1 lbs/ft³]	1.4571 (316Ti)
	Cylinder	25 mm [1.0 in]	20 mm [0.8 in]	≤ 16 bar [≤ 232 psi]	≤ 80 °C [≤ 176 °F]	≥ 750 kg/m³ [46.8 lbs/ft³]	Buna / NBR
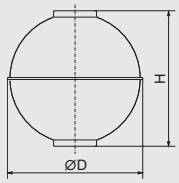	Sphere [3]	52 mm [2.0 in]	52 mm [2.0 in]	≤ 40 bar [≤ 580 psi]	≤ 120 °C [≤ 248 °F]	≥ 750 kg/m³ [46.8 lbs/ft³]	1.4571 (316Ti)

1) Not with process connection G 1
2) Only with guide tube length ≤ 1,000 mm [39.4 in]
3) Not with process connection G 1, G 1 ½

Connection diagram

Angular connector DIN 175301-803 A

	Variable resistance		Current output, 4 ... 20 mA, 2-wire	
	Overall resistance	Pin 2 / 3	U_+	Pin 1
	100 ... 0 %	Pin 1 / 3	U-	Pin 2
	0 ... 100 %	Pin 1 / 2		

Circular connector M12 x 1 (4-pin)

	Variable resistance		Current output, 4 ... 20 mA, 2-wire	
	Overall resistance	Pin 3 / 4	U+	Pin 1
	100 ... 0 %	Pin 1 / 3	U-	Pin 4
	0 ... 100 %	Pin 1 / 4		

Cable outlet

	Variable resistance	
	Overall resistance	green / white
	100 ... 0 %	white / brown
	0 ... 100 %	brown / green

Aluminium case

	Variable resistance		Current output, 4 ... 20 mA, 2-wire	
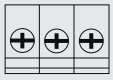	Overall resistance	Terminal W1 / W3	U+	Terminal U+
	100 ... 0 %	Terminal W1 / W2	U-	Terminal U-
	0 ... 100 %	Terminal W2 / W3		

Electrical safety	
Reverse polarity protection	U+ vs. U-
Insulation voltage	DC 1,500 V
Overvoltage protection	DC 40 V

Dimensions in mm [in]

with angular connector form A
Resistance signal

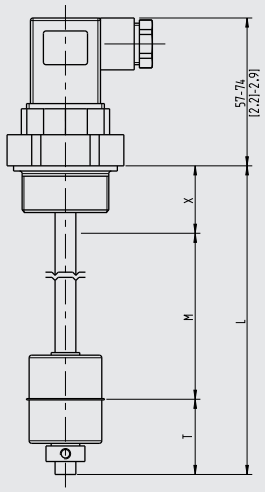

with angular connector form A
Current output 4 ... 20 mA

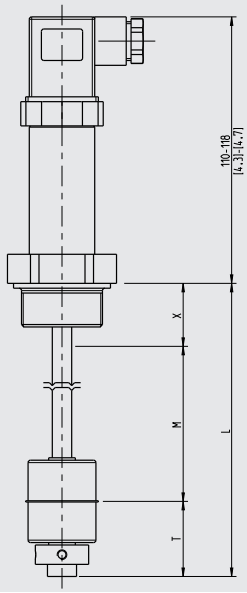

with connection housing

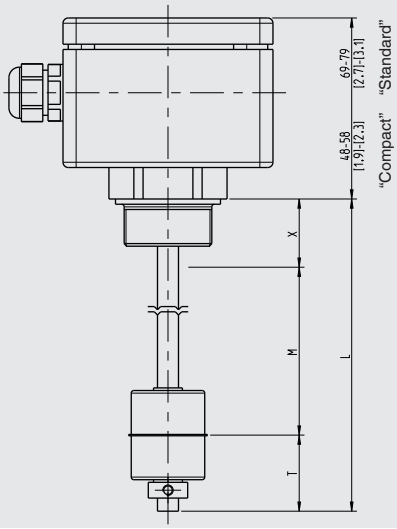

with M12 x 1 circular connector
Resistance signal

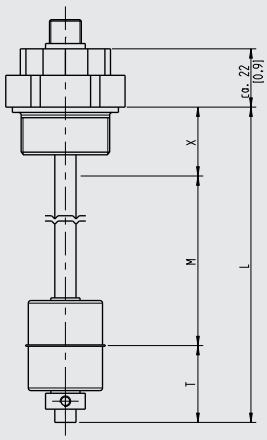

with M12 x 1 circular connector
Current output 4 ... 20 mA

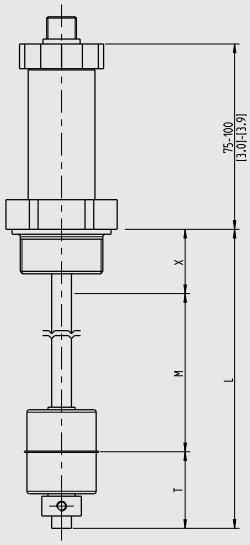

with cable outlet
Resistance signal

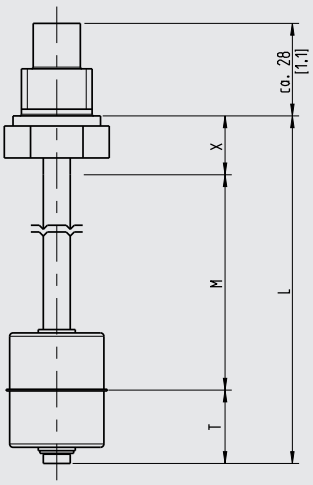

Legend

L Guide tube length
M Measuring range
X Distance sealing face to 100 % mark
(X ≥ dead band T in mm [in] (from sealing edge))
T Dead band (pipe end)

Float stop at guide tube end

- Adjusting collar, for medium temperature ≤ 80 °C [≤ 176 °F]
- Pipe clamp, for medium temperature > 80 °C [> 176 °F]

Dead band T float switch in mm [in] (from sealing edge)

Process connection	Outer diameter float Ø D			
	Ø 30 mm [1.2 in]	Ø 44 mm [1.7 in]	Ø 52 mm [2.0 in]	Ø 25 mm [1.0 in]
G 1 (from outside)	35 mm [1.4 in]	-	-	-
G 1 ½ (from outside)	35 mm [1.4 in]	45 mm [1.8 in]	-	25 mm [1.0 in]
G 2 (from outside)	40 mm [1.6 in]	50 mm [2.0 in]	50 mm [2.0 in]	25 mm [1.0 in]
Flange (from outside)	20 mm [0.8 in]	30 mm [1.2 in]	30 mm [1.2 in]	5 mm [0.2 in]
G ¼ B (from inside)	35 mm [1.4 in]	40 mm [1.6 in]	40 mm [1.6 in]	20 mm [0.8 in]
G ⅜ B (from inside)	35 mm [1.4 in]	40 mm [1.6 in]	40 mm [1.6 in]	20 mm [0.8 in]
G ½ B (from inside)	35 mm [1.4 in]	45 mm [1.8 in]	45 mm [1.8 in]	20 mm [0.8 in]

Dead band T in mm [in] (pipe end)

Dead band	Outer diameter float Ø D			
	Ø 30 mm [1.2 in]	Ø 44 mm [1.7 in]	Ø 52 mm [2.0 in]	Ø 25 mm [1.0 in]
T	35 mm [1.4 in]	45 mm [1.8 in]	45 mm [1.8 in]	45 mm [1.8 in]

Process connection

Installation from outside

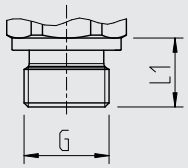

G	L_1	Spanner width
G 1	16 mm [0.63 in]	41 mm [1.6 in]
G 1 ½	18 mm [0.71 in]	30 mm [1.2 in]
G 2	20 mm [0.79 in]	36 mm [1.4 in]

Installation from inside

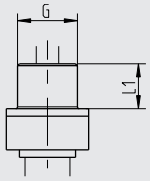

G	L_1	Spanner width
G ¼ B	12 mm [0.47 in]	19 mm [0.7 in]
G ⅜ B	12 mm [0.47 in]	22 mm [0.9 in]
G ½ B	14 mm [0.55 in]	27 mm [1.1 in]

Flange
DN 50, form B per EN 1092-1 (DIN 2527), PN 16

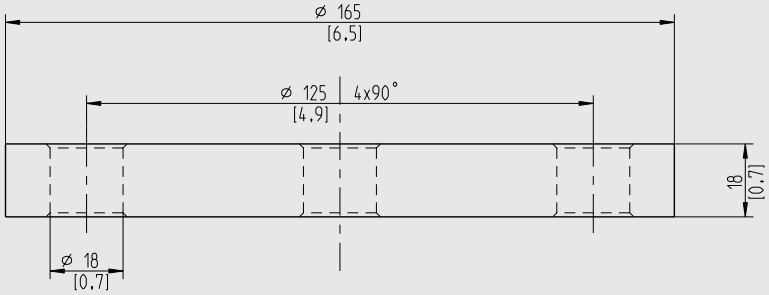

Accessories

Circular connector M12 x 1 with moulded cable					
	Description	Temperature range	Cable diameter	Cable length	Order number
	Straight version, cut to length, 4-pin, PUR cable, UL listed, IP67	-20 ... +80 °C [-4 ... +176 °F]	4.5 mm [0.18 in]	2 m [6.6 ft]	14086880
				5 m [16.4 ft]	14086883
				10 m [32.8 ft]	14086884
	Angled version, cut to length, 4-pin, PUR cable, UL listed, IP67	-20 ... +80 °C [-4 ... +176 °F]	4.5 mm [0.18 in]	2 m [6.6 ft]	14086889
				5 m [16.4 ft]	14086891
				10 m [32.8 ft]	14086892

Approvals

Logo	Description	Country
CE	**EU declaration of conformity** ■ EMC directive EN 61326 emission (group 1, class B) and interference immunity (industrial application) ■ RoHS directive	European Union

Manufacturer‘s information and certifications

Logo	Description
-	**China RoHS directive**

Approvals and certificates, see website

Ordering information

Model / Output signal / Electrical connection / Process connection / Guide tube length L / 100 % mark (optional) / Accuracy, resolution / Medium temperature / Float

© 01/2017 WIKA Alexander Wiegand SE & Co. KG, all rights reserved.
The specifications given in this document represent the state of engineering at the time of publishing.
We reserve the right to make modifications to the specifications and materials.

ТОВ "Автоматік Сервіс Україна"
Україна, 79000, м.Львів, п-р Чорновола, 63 оф.201
+38 044 344 16 04, +38 068 166 16 01
https://asu-tp.shop/ info@asu-tp.com.ua