IF NO SPECIFICATIONS : GENERAL TOLERANCES UNI - ISO 2768-mH / THREADING CLASS A - 6H - 6g

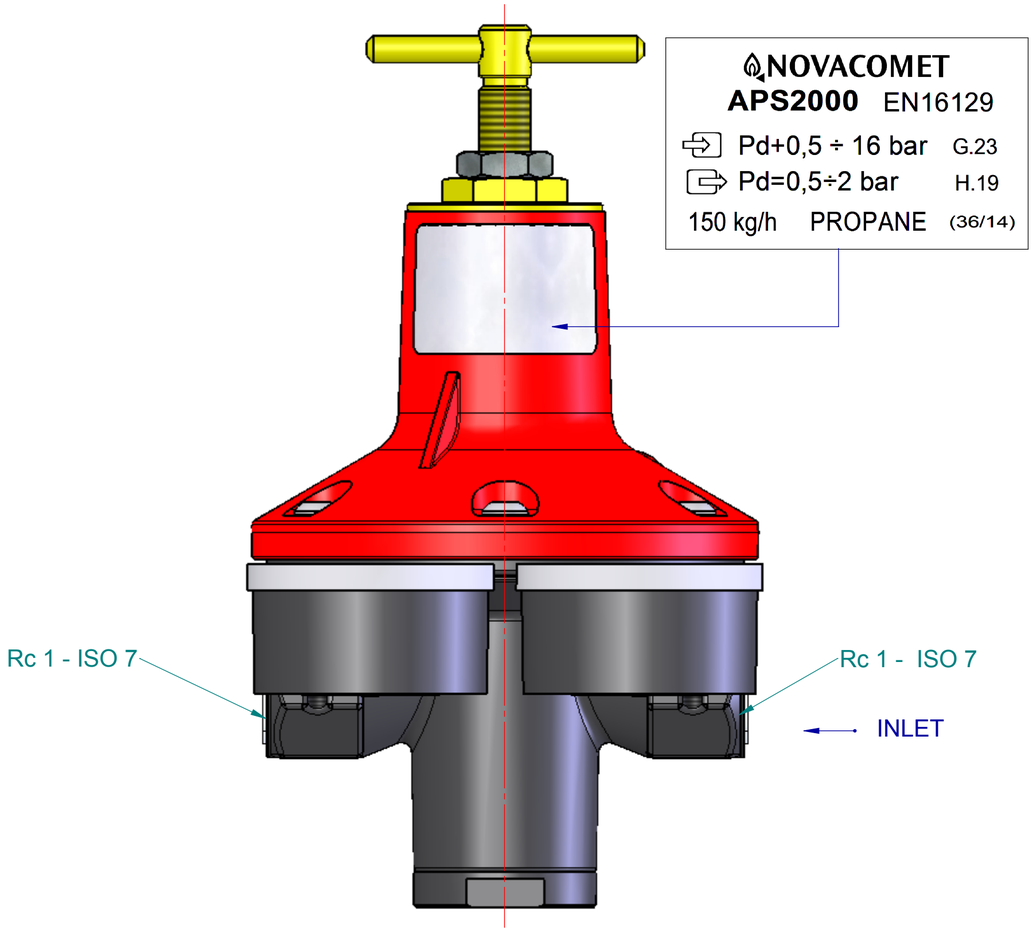

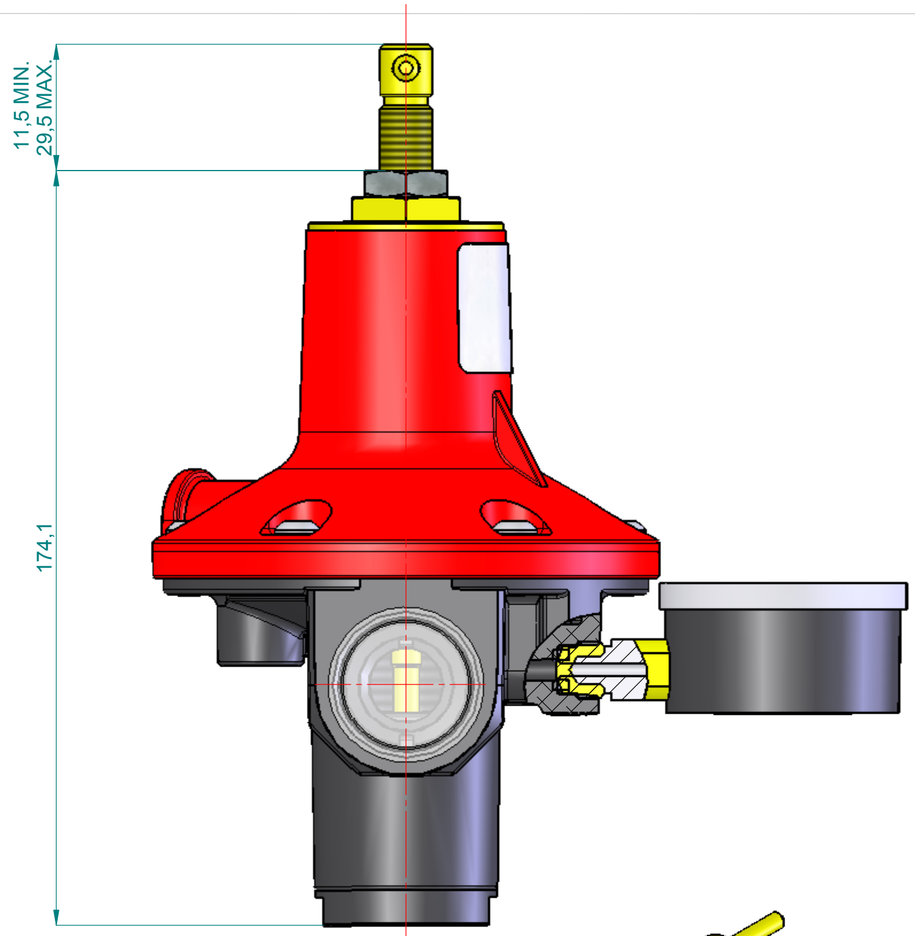

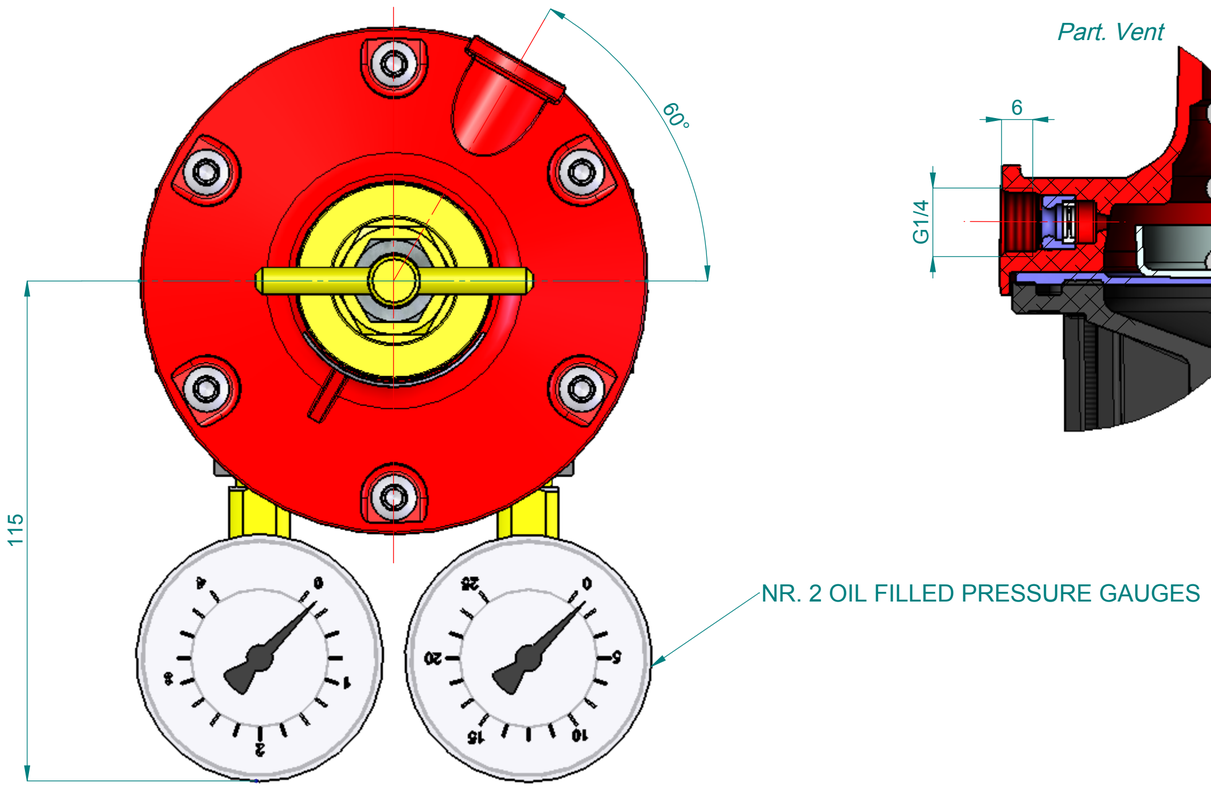

Part. Vent

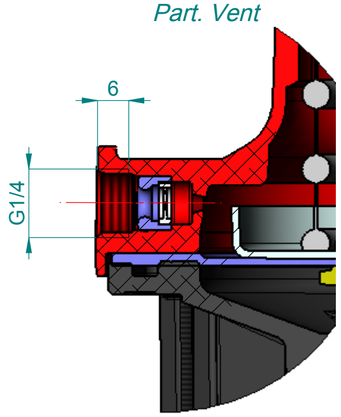

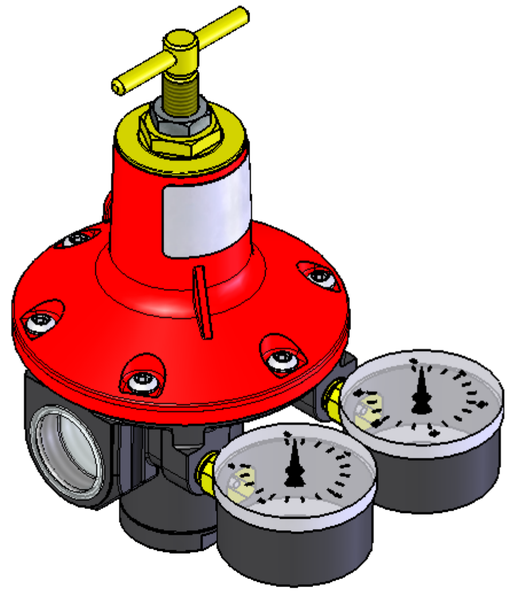

16/09/2014	Creation			Valid	PR		BA
Date	Modifications			Status	Validated by	N° DT / OL	Modified by
Material	-						
Treatment			Date 12/09/2014				
Weight	1324.71 g	Design. BA	Scale 1:2	A2			
Designation	RG.APS RC1"FF>0,5-2B.2M-B.0			Article code	002540AC		Ind A

CLESSE NOVACOMET

Reproduction prohibited or reproduction rights reserved - we reserve the right to modify the informations contained herein at any time without notice