Dimensions Size;

2PE 80 - SAE C - 4 BOLT

SAE D 13T-8/16
SAE C 14T-12/24

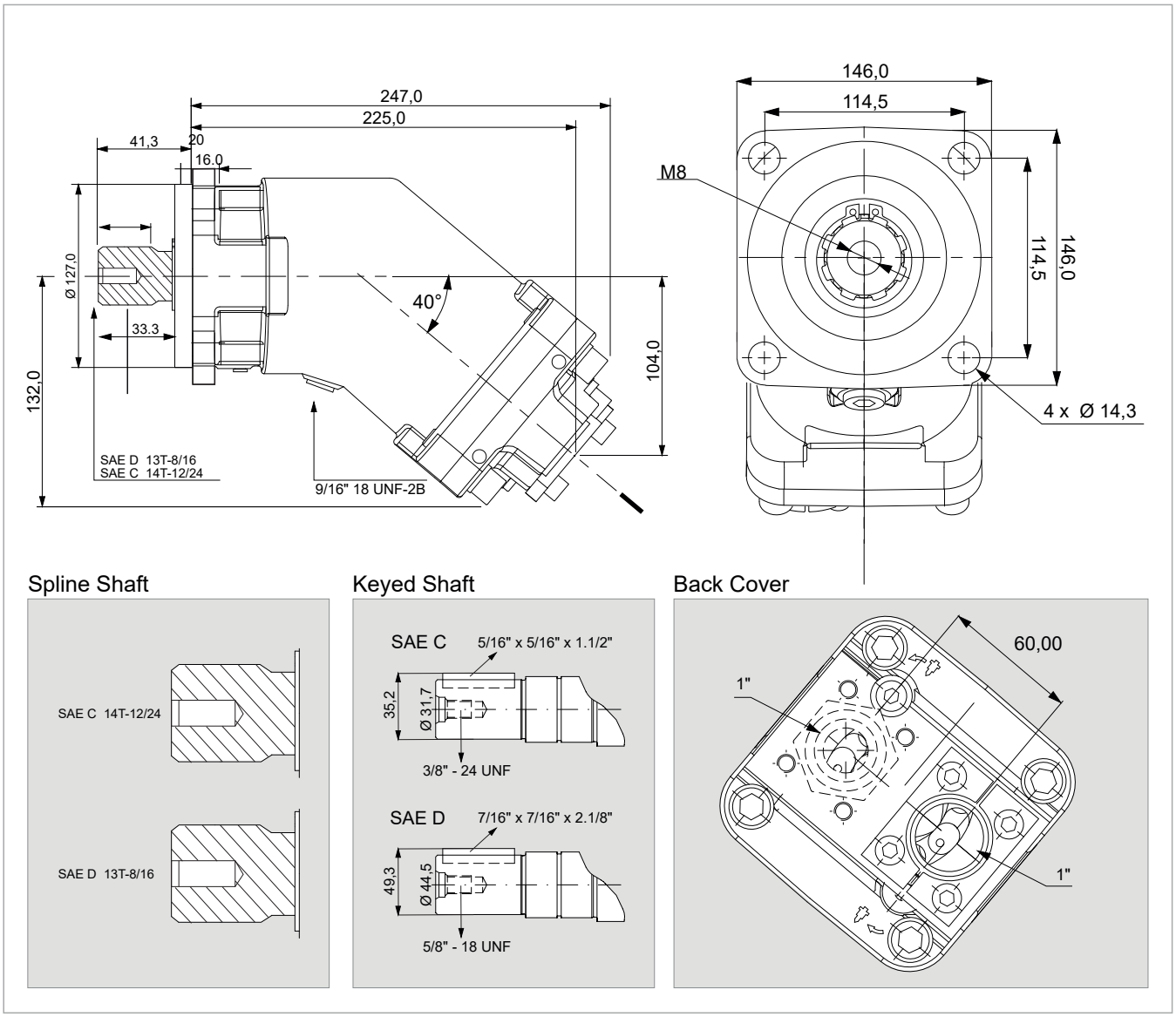

x 1000 rpm	80,00 cc
x 1500 rpm	120,00 cc
Max. Continuous Pump Speed	1700 rpm
Max. Limited Pump Speed	2100 rpm
Max. Continuous Pressure	350 bar
Max. Intermit. Peak Pressure	400 bar
Max. Torque at 350 bar	460 Nm
Weight without inlet fitting	16,00 kg
Weight with inlet fitting	16,40 kg
Rotation	CW-CCW
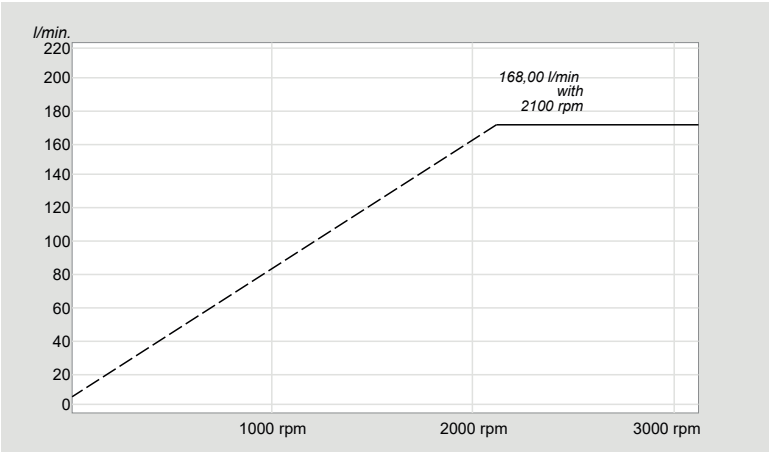
Flow, Speed, Pressure List of 2PE 80