Level | Pressure | Flow | Temperature | Liquid Analysis | Registration | Systems Components | Services | Solutions

Technical Information

Soliphant T FTM20, FTM21

Level limit switch
Robust vibration limit switch for bulk solids, also for dust incendive hazard areas

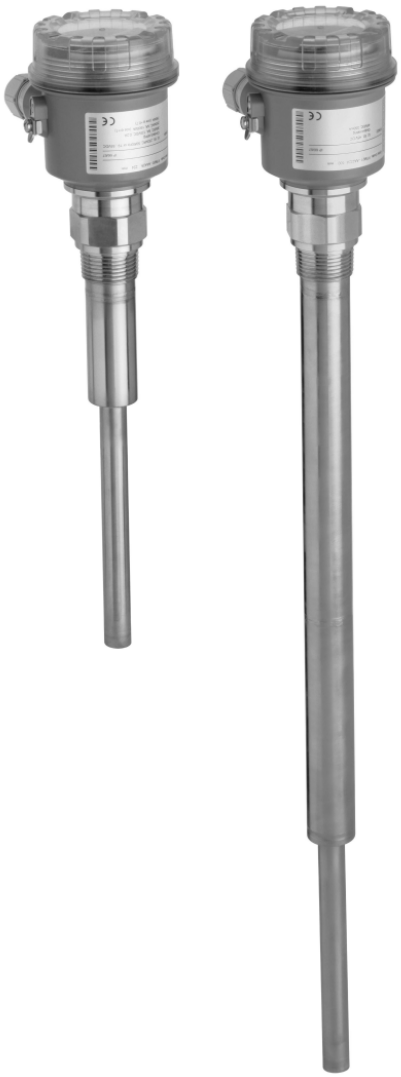

Application

Soliphant T is a robust level limit switch for silos with fine-grained or coarse-grained, non-fluidised bulk solids. The various designs means the device has a wide range of applications. Certificates are also available for use in dust incendive hazard areas.

FTM20: compact design (250 mm) as vibrating rod for installation in any direction

FTM21: vibrating rod with extension pipe (500 mm/1000 mm/1500 mm/20 in/40 in/60 in) for installation in any direction

Typical applications: cereals, coffee beans, sugar, animal feed, rice, detergents, dye powder, chalk, gypsum, cement, sand, plastic granules

Your benefits

- No calibration: easy commissioning
- Insensitive to build-up: maintenance-free operation
- No mechanically moving parts: no wear, long operating life
- Sensor material 316L: hardly any abrasion even with building materials
- F16 plastic housing with cover with sight glass: switch status visible from outside
- F18 aluminium housing also available
- Insensitive to external vibration and flow noises
- Also available with explosion protection ATEX II 1/3 D, FM or CSA approval

TI389F/00/en

Endress+Hauser

People for Process Automation

Table of contents

Function and system design

Measuring principle

A piezoelectric drive excites the vibrating rod of Soliphant T FTM20, FTM21 to its resonance frequency. If medium covers the vibrating rod, the rod's vibrating amplitude changes (the vibration is damped). Soliphant's electronics compare the actual amplitude with a target value and indicates whether the vibrating rod is vibrating freely or whether it is covered by medium.

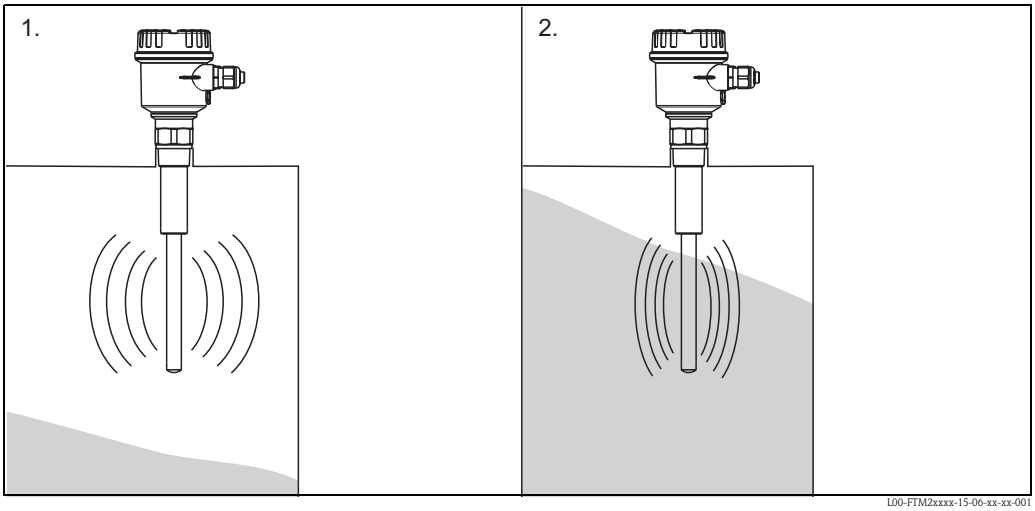

1. Vibrating amplitude with probe vibrating freely
2. Vibrating amplitude with probe covered

Measuring system

Soliphant T is a compact electronic switch.

Thus, the entire measuring system only consists of:

- Soliphant T FTM20 or FTM21 with FEM22 or FEM24 electronic insert
- a supply point and
- the connected control systems, switching units, signalling systems (e.g. lamps, horns, PCS, PLC, etc.)

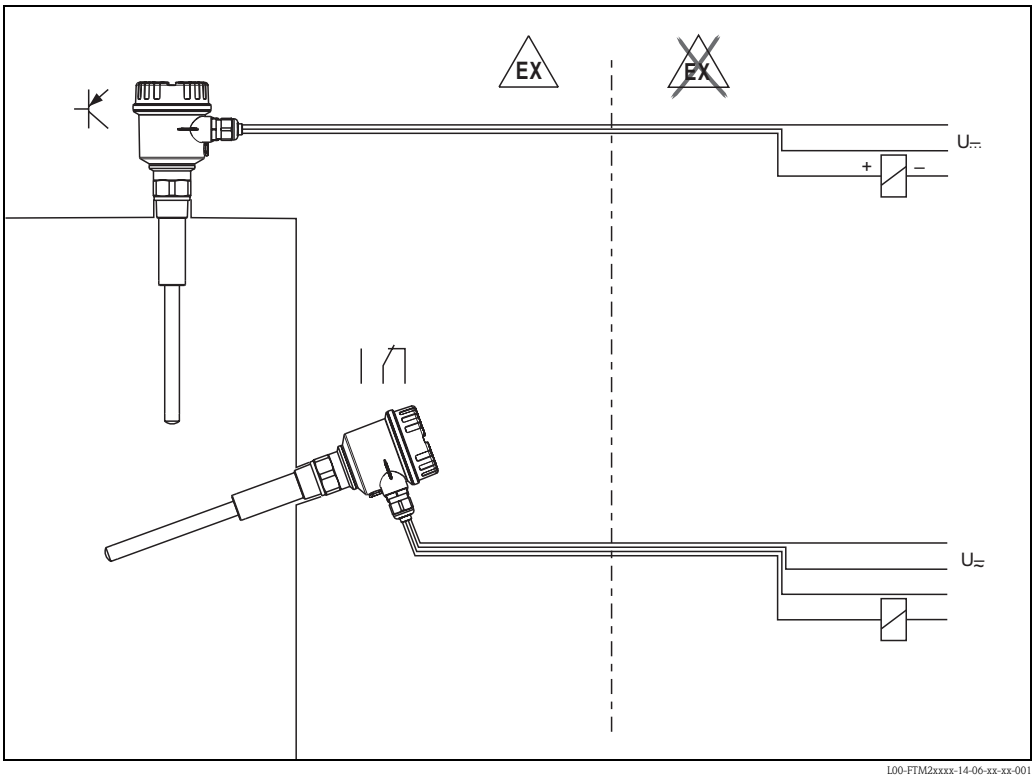

Cable specifications

Use a usual commercial cable (max. 2.5 mm^2).

Note!
Use a shielded cable in the event of strong electromagnetic radiation.

Cable entries

M20x1.5 (cable gland); NPT½"; G½"

Input

Measured variable

From 200 g/l within the length of the sensor.

Measuring range (application)

The measuring range depends on the mounting location of Soliphant T and the length of the pipe extension selected. The pipe extension is available in the following lengths: 500 mm, 1000 mm, 1500 mm, 20 in, 40 in, 60 in.

Input signal

Probes covered => small amplitude
Probe not covered => large amplitude

Output

Switching delay

0.5 s when the sensor is covered
1 s when the sensor is exposed

Switch behaviour

ON/OFF

Fail-safe mode

Minimum/maximum quiescent current safety can be switched at electronic insert

Max. = maximum safety:
When the vibrating rod is covered, the output switches in the direction of the signal on alarm
Used for overfill protection for example

Min. = minimum safety:
When the vibrating rod becomes exposed, the output switches in the direction of the signal on alarm
Used for dry running protection and empty running protection for example

FEM22 electronic insert (DC PNP)

Power supply

DC voltage 10 V…45 V
Ripple max. 5 V, 0…400 Hz
Current consumption max. 15 mA
Power consumption max. 0.68 W
Reverse polarity protection
FEM22 overvoltage protection: overvoltage category III

Electrical connection

Three-wire direct current connection

Preferred in conjunction with programmable logic controllers (PLC),
DI modules as per EN 61131-2.

Positive signal at electronics switch output (PNP);
Output blocked at level limit.

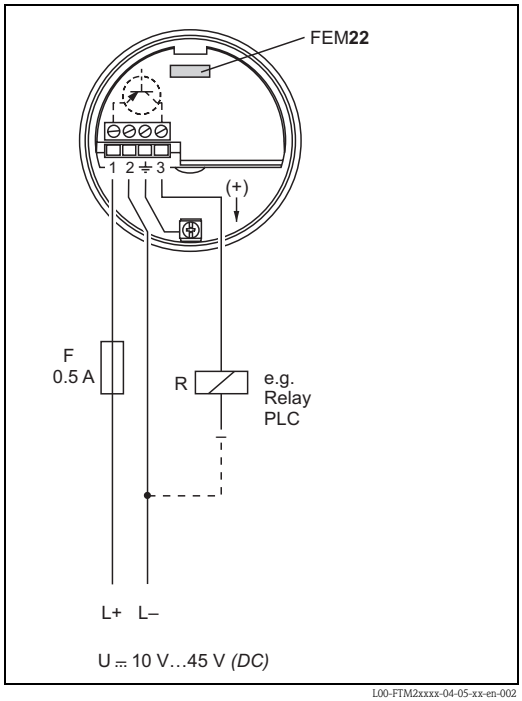

L00-FTM2xxxx-04-05-xx-en-002

Output signal

IL = Load current (switched through)

< 100 µA = Residual current (blocked)

☼ = Lit

● = Not lit

L00-FTL2xxxx-07-05-xx-xx-000

Fail-safe mode	Level	Output signal	LEDs green	LEDs yellow
Max.		L+ 1 I_L + 3	☼	☼
		1 < 100 µA 3	☼	●
Min.		L+ 1 I_L + 3	☼	☼
		1 < 100 µA 3	☼	●

L00-FTM2xxxx-04-05-xx-xx-003

Signal on alarm

Output signal in event of power failure: < 100 µA

Connectable load

Load switched via transistor and separate PNP connection.
Max. 45 V (cyclical overload and short-circuit protection);
Continuous max. 350 mA;
Max. 0.5 µF for 45 V, max. 1.0 µF for 24 V;
Residual voltage < 3 V (for transistor switched through);
Residual current < 100 µA (for blocked transistor).

FEM24 electronic insert (AC/DC with relay output)

Power supply

Alternating voltage 19 V…253 V, 50/60 Hz or DC voltage 19 V…55 V
Power consumption max. 1.3 W
Reverse polarity protection
FEM24 overvoltage protection: overvoltage category III

Electrical connection

Universal current connection with relay output

Output:
When connecting a device with high inductance, provide a spark arrester to protect the relay contact.
A fine-wire fuse (depending on the load connected) protects the relay contact in the event of a short-circuit.

Both relay contacts switch simultaneously.
DPDT (double pole double throw)

* When jumpered, the relay output works with NPN logic.

** Please refer to "Connectable load" section

✎ Note!
Please note the different voltage ranges for direct and alternating current.

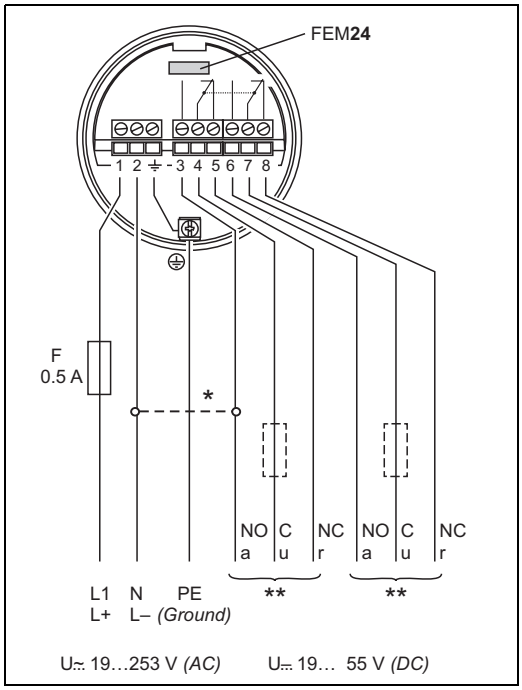

L00-FTM2xxxx-04-05-xx-xx-004

Output signal

= Relay energised

= Relay de-energised

= Lit

= Not lit

L00-FTL2xxxx-07-05-xx-xx-001

Fail-safe mode	Level	Output signal	LEDs green	LEDs yellow
Max.		3 4 5 / 6 7 8	☼	☼
		3 4 5 / 6 7 8	☼	●
Min.		3 4 5 / 6 7 8	☼	☼
		3 4 5 / 6 7 8	☼	●

L00-FTM2xxxx-04-05-xx-xx-005

Signal on alarm

Output signal in event of power failure: relay de-energised

Connectable load

Loads switched via 2 floating change-over contacts.
I~ max. 6 A, U~ max. 253 V;
P~ max. 1500 VA, cos φ = 1, P~ max. 750 VA, cos φ > 0.7;
I- max. 6 A to 30 V, I- max. 0.2 A to 125 V.

The following applies when connecting a functional extra-low voltage circuit with double insulation as per IEC 1010: Sum of voltages of relay output and power supply max. 300 V

Performance characteristics

Reference operating conditions	Ambient temperature: 20 °C Fluid temperature: 20 °C Medium: ABS granules (610...680 g/l) grain size: 2...3.5 mm Atmospheric pressure Sensor installation: vertical from above or below; horizontal from the side
Measuring frequency	700...800 Hz
Maximum measured error	≤ 5 mm
Repeatability	< 1 mm
Start-up settling time	< 3 s

Installation

Installation instructions

Mounting location

e.g. storage or buffer container

Orientation

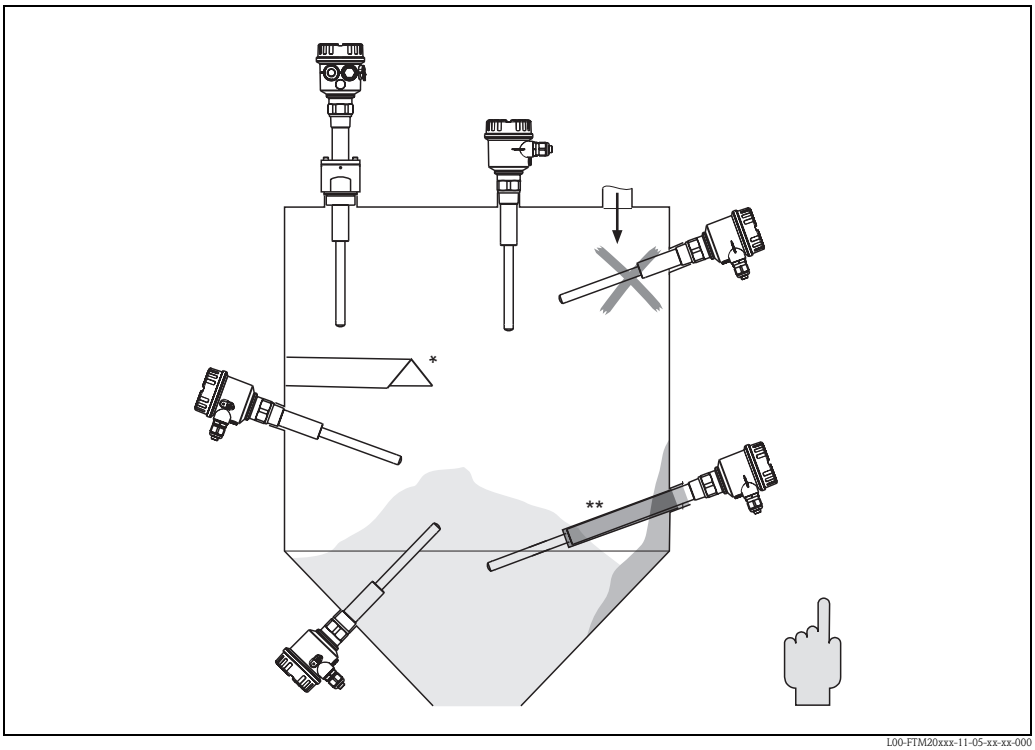

L00-FTM20xxx-11-05-xx-xx-000

Horizontal installation/vertical installation
** With protective cover (to be provided by customer)*
*** With protecting tube (to be provided by customer)*

Environment

Ambient temperature range	–40...70 °C
Storage temperature	–40...85 °C
Climate class	Tropicalised as per DIN IEC 68 Part 2-38
Degree of protection	IP66/IP67 (F16, F18 housing)
Electrical safety	IEC 61010, CSA 1010.1-92, FM3600
Vibration resistance	DIN 60068-2-27 / IEC 68-2-27: shock 50 g; vibration 0.05 g^2/Hz
Electromagnetic compatibility	Interference emission to EN 61326, Electrical Equipment Class B Interference immunity to EN 61326, Annex A (Industrial)

Process

Environment

Permitted ambient temperature T_1 at housing depending on the medium temperature T_2 in the container:

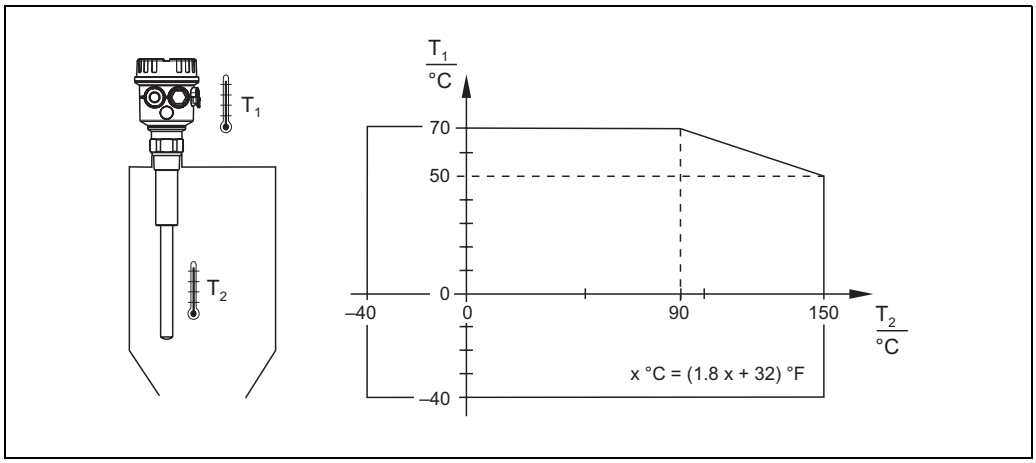

L00-FTM20xxx-05-06-xx-xx-001

Thermal shock resistance	120 K
Limiting medium pressure range	–1...25 bar
State of aggregation	Solids
Density	Bulk solids weight: ≥ 200 g/l, not fluidised Grain size: ≤ 25 mm
Rod lateral load	≤ 450 N
Pipe lateral load	≤ 160 N (1 m)

Mechanical construction

Note!
All dimensions in mm.

Design, dimensions

Compact version

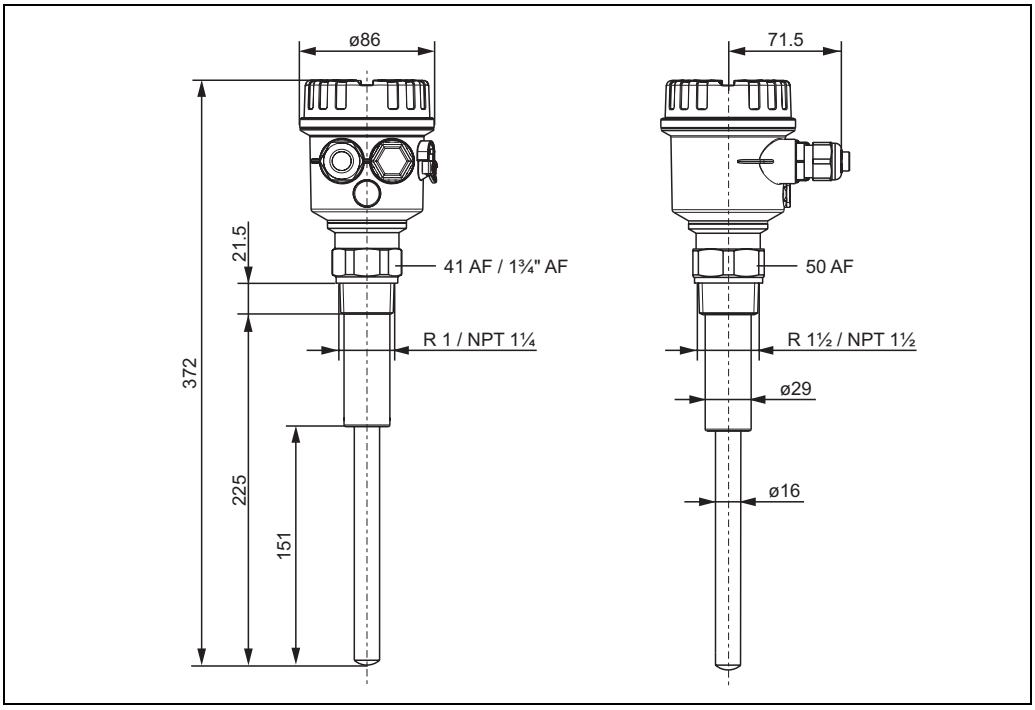

L00-FTM20xxx-06-05-xx-en-001

Pipe extension

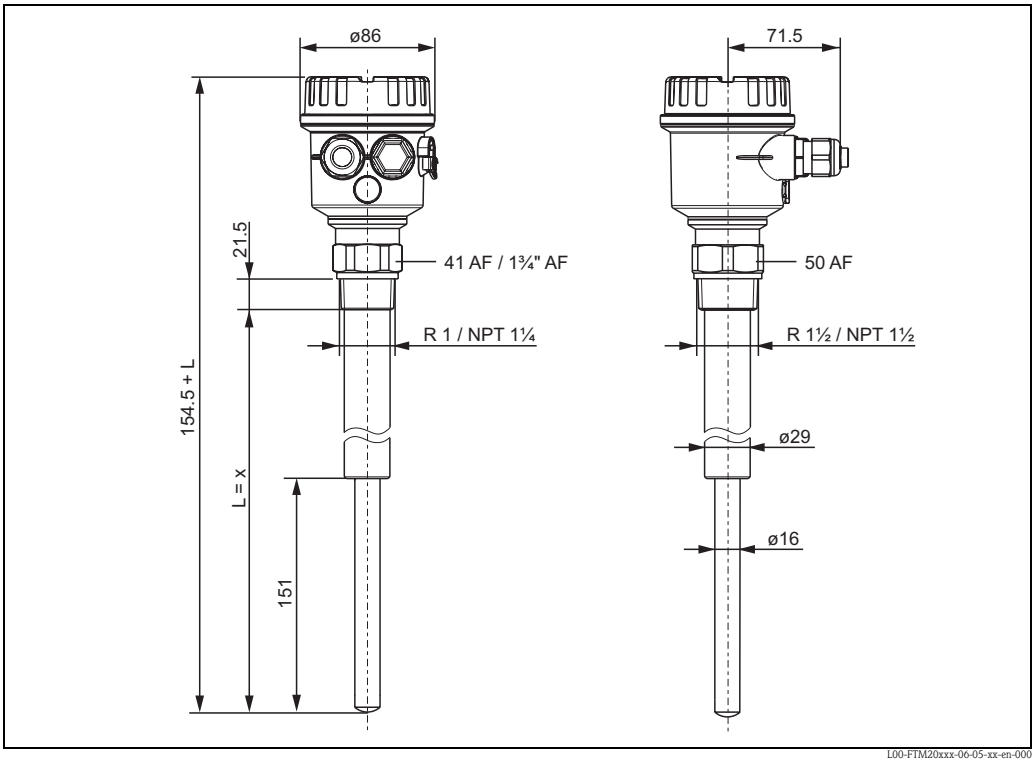

L00-FTM20xxx-06-05-xx-en-000

x = 500 mm; 1000 mm; 1500 mm; 20 in; 40 in; 60 in

Weight

FTM20/FTM21 with F16 housing, FEM24 and R1" thread:

Compact	= 963 g
500 mm	= 1325 g
1000 mm	= 2011 g
1500 mm	= 2607 g

Material

Sensor

316L

F16 housing

PTB-FR, cover with sight glass made of PA12, EPDM cover seal

F18 housing

Aluminium EN-AC-AlSi10Mg, plastic-coated
EPDM cover seal

Process connections

- R1; R1½ (316L, DIN 2999)
- 1¼ - 11½ NPT; 1½ - 11½ NPT (316L, ANSI B 1.20.1)

Human interface

Operating elements

FEM22, FEM24

One switch to set maximum or minimum detection (see also fail-safe mode on Page 4)

One switch to set the density of the bulk solids (> 400g/l or > 200g/l)

Display elements

FEM22

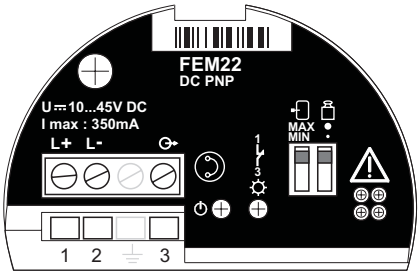

L00-FEM22xxx-07-05-xx-xx-001

One green LED: operation
One yellow LED: electronic switch closed

FEM24

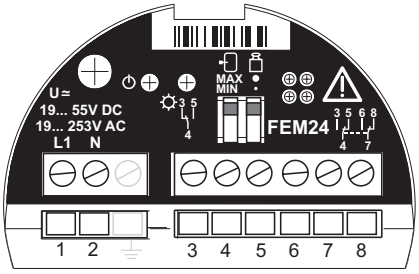

L00-FEM24xxx-07-05-xx-xx-002

One green LED: operation
One yellow LED: contact closed (relay energised or fed with current)

Certificates and approvals

CE mark

Soliphant T meets the statutory requirements of the EC Directives. Endress+Hauser confirms successful testing of the device by affixing to it the CE mark.

Other standards and guidelines

Other standards and guidelines that were taken into consideration in designing and developing Soliphant T FTM20, FTM21:

- Low Voltage Directive (73/23/EEC)
- DIN EN 61010 Part 1, 2001
  Protection Measures for Electrical Equipment for Measurement, Control, Regulation and Laboratory Procedures
  Part 1: General requirements
- EN 61326
  Electrical Equipment for Measurement, Control and Laboratory Use
  EMC requirements

Ex approval

Your Endress+Hauser sales centre can provide you with information on the Ex versions which can currently be delivered (ATEX II 1/3 D).
All explosion protection data are given in a separate documentation (see "Documentation") which is available upon request

Type of protection

- ATEX II 1/3 D
- CSA DIP
- FM DIP

Ordering information

Soliphant T FTM20

10	Approval
A	Non-hazardous area
C	CSA General Purpose, CSA C US
D	CSA DIP+FM DIP
Y	Special version
4	ATEX II 1/3 D

20	Process connection			
A	Thread, DIN2999	R1,	316L
G	Thread, DIN2999	R1½,	316L
M	Thread, ANSI	NPT1¼,	316L
N	Thread, ANSI	NPT1½,	316L
Y	Special version		

30	Electronics; output		
2	FEM22:	3-wire PNP,	10... 45 V DC
4	FEM24:	Relay DPDT,	19...253 V AC / 55 V DC
9	Special version		

40	Housing; cable entry			
2	F16	Polyester	IP66/IP67	M20 gland
3	F16	Polyester	IP66/IP67	Thread, NPT½
4	F16	Polyester	IP66/IP67	Thread, G½
5	F18	Aluminium	IP66/IP67	M20 gland
6	F18	Aluminium	IP66/IP67	Thread, NPT¾
7	F18	Aluminium	IP66/IP67	Thread, G½
9	Special version			

50	Additional fittings
A	Basic version
Y	Special version

FTM20	Complete product designation

Soliphant T FTM21

10	Approval
A	Non-hazardous area
C	CSA General Purpose, CSA C US
D	CSA DIP+FM DIP
Y	Special version
4	ATEX II 1/3 D

20	Process connection		
A	Thread, DIN2999	R1,	316L
G	Thread, DIN2999	R1½,	316L
M	Thread, ANSI	NPT1¼,	316L
N	Thread, ANSI	NPT1½,	316L
Y	Special version		

25	Sensor length
2	500 mm
3	1000 mm
4	1500 mm
6	20 inch
7	40 inch
8	60 inch
9	Special version

30	Electronics; output		
2	FEM22:	3-wire PNP,	10...45 V DC
4	FEM24:	Relay DPDT,	19...253 V AC / 55 V DC
9	Special version		

40	Housing; cable entry			
2	F16	Polyester	IP66/IP67	M20 gland
3	F16	Polyester	IP66/IP67	Thread, NPT½
4	F16	Polyester	IP66/IP67	Thread, G½
5	F18	Aluminium	IP66/IP67	M20 gland
6	F18	Aluminium	IP66/IP67	Thread, NPT¾
7	F18	Aluminium	IP66/IP67	Thread, G½
9	Special version			

50	Additional fittings
A	Basic version
Y	Special version

FTM21	Complete product designation

Accessories

Soliphant T

- Sliding sleeve, pressurised
  R 1½: TN 52023312
  NPT 1½-11½: TN 52025090

  Note!
  Suitable for multiple switch-point configurations

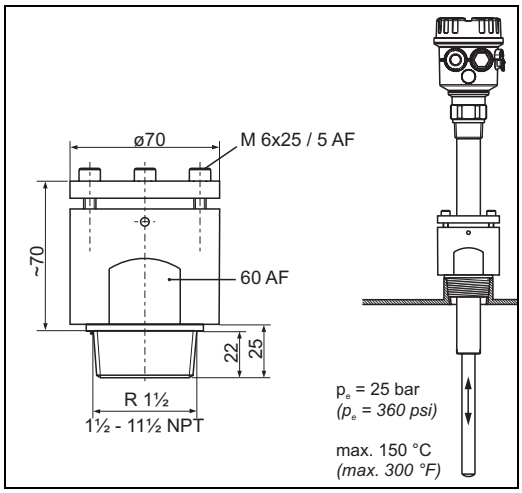

L00-FTM2xxxx-03-05-xx-en-001

- Sliding sleeve, unpressurised, IP65
  R 1½: TN 52023313
  NPT 1½-11½: TN 52024578

  Note!
  Only suitable for one-time switch-point configuration!

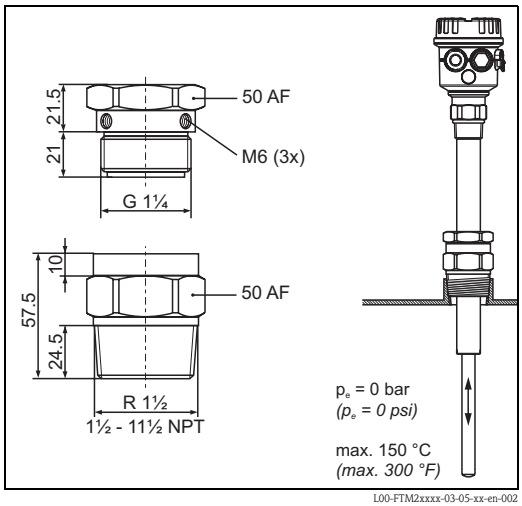

L00-FTM2xxxx-03-05-xx-en-002

Spare parts

- FEM22 electronic insert
  TN 52025688
- FEM24 electronic insert
  TN 52025691
- Plastic cover with sight glass with seal
  TN 52025790
- Aluminium cover with seal
  TN 52005910

Documentation

Operating Instructions

- Soliphant T FTM20, FTM21
  KA227F/00/a6

Certificates

- ATEX II 1/3 D T +12 K
  XA300F/00/a3

International Head Quarter

Endress+Hauser
GmbH+Co. KG
Instruments International
Colmarer Str. 6
79576 Weil am Rhein
Deutschland

Tel. +49 76 21 9 75 02
Fax +49 76 21 9 75 34 5
www.endress.com
info@ii.endress.com

Endress+Hauser
People for Process Automation

TI389F/00/en/10.04
SL/FM+SGML6.0 ProMoDo