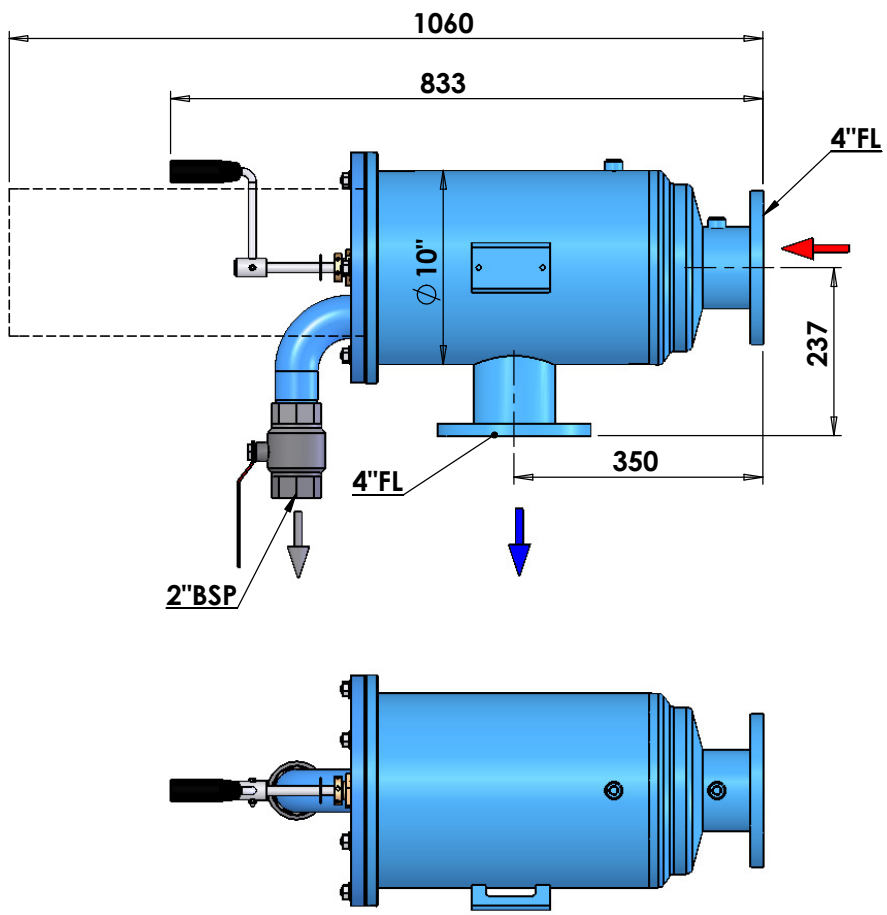

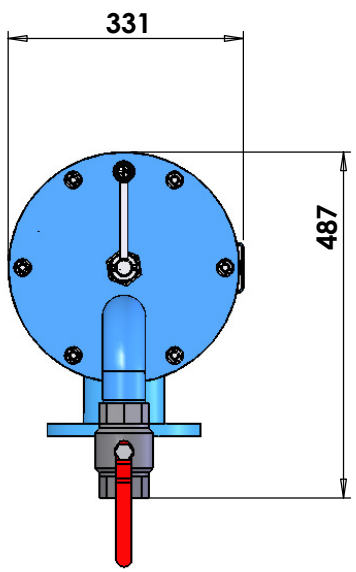

DWG/CATALOG NO:	SA504FB
PROJECT:	SEMI AUTOMATIC SCREEN FILTER BRUSHES
MODEL:	SA504FB
DIM: mm	SCALE: 1:10	A4