Input data

System of measurement		Metric
Input type		Coupling for electric motor
Input speed	[rpm]	2800
Output speed	[rpm]	416.67
Ratio (i=)		6.72
Frequency	[Hz]	50
Input options		IEC
Requested input power	[kW]	2.2
Service factor		2.7
Rated Power P1	[kW]	5.95

Output data

Gear unit		**F RD 22 B5 DFU200 V5 6.72 90 B5 AU 25x50**
Type		RD - Helical gearboxes
Input type		F (Elastic coupling)
Size		22
Ratio (i=)		6.72
Input flange		B5
Mounting position		V5
Input speed	[rpm]	2800
Output speed	[rpm]	416.67
Rated output torque	[Nm]	48.41
Service Factor		2.7
Efficiency		0.96
Inertia moment	[kgm^2]	0.000272

Gear unit configuration

Fixing		Output flange
Output shaft		AU 25x50
Flange		DFU200

Output radial and axial loads

Output radial load	[N]	1295
Output axial load	[N]	259

Electric motor coupling

Size		90 L2
Poles n.		2
Power	[kW]	2.2

VARVEL SpA | Via 2 agosto 1980 | Loc. Crespellano, 40053 Valsamoggia (BO) Italy | T +039 051 6721811 | F +039 051 6721825 | varvel@varvel.com

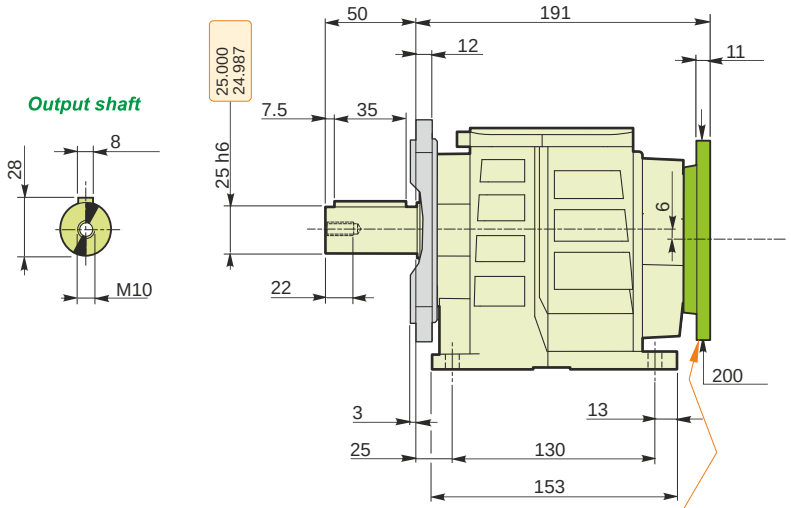

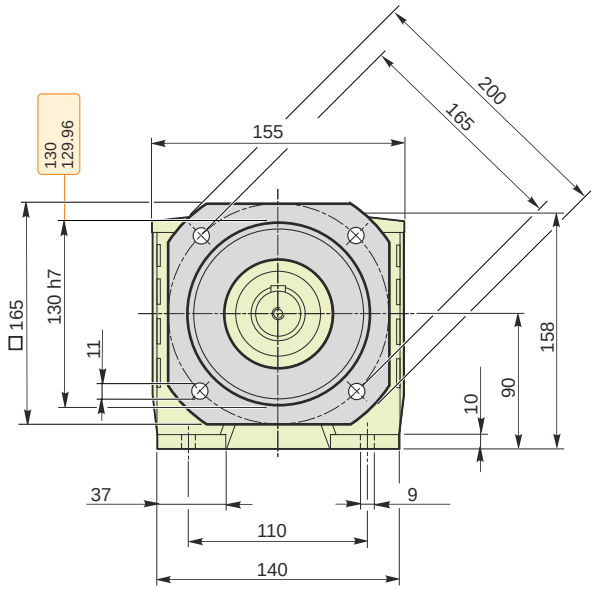

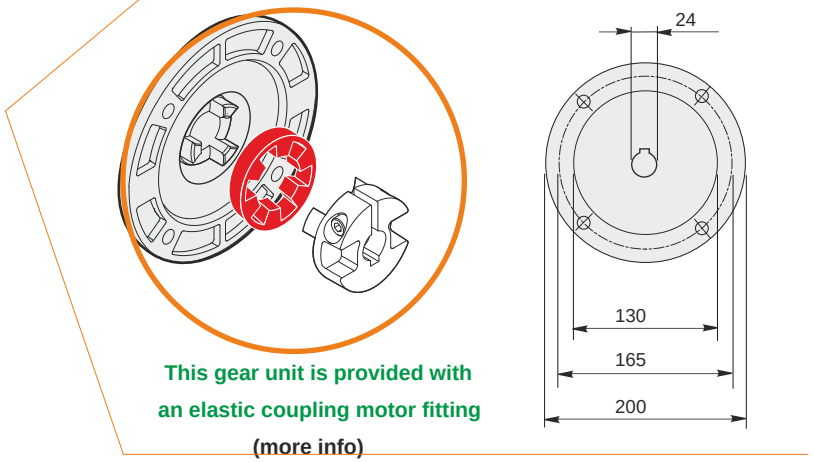

This gear unit is provided with an elastic coupling motor fitting (more info)

F RD 22 B5 DFU200 V5 6.72 90 B5 AU 25x50

VARVEL SpA | Via 2 agosto 1980 | Loc. Crespellano, 40053 Valsamoggia (BO) Italy | T +039 051 6721811 | F +039 051 6721825 | varvel@varvel.com

Mounting positions

H1	H2	H3	H4	V5	V6
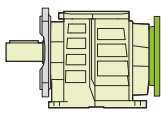	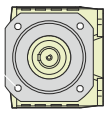	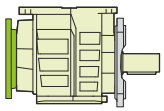	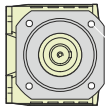	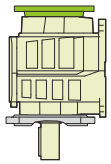	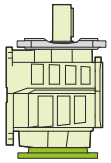
0.8				1	

Oil quantity [litres]

Lubricant type: Long life synthetic oil ISO VG320

Direction of rotation

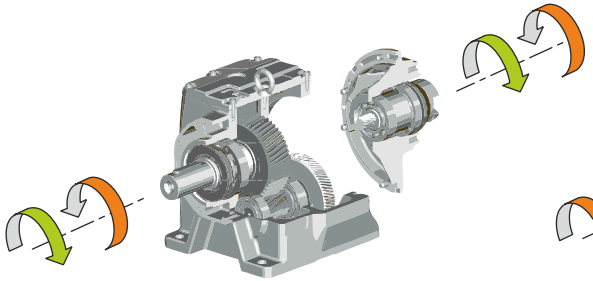

2 reduction stages
(02-12-22-32-42-52-62)

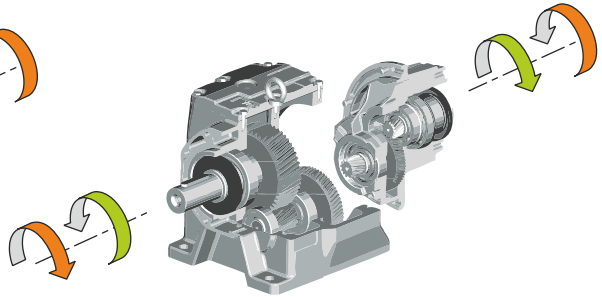

3 reduction stages
(03-13-23-33-43-53-63)

Weight

Gear unit [kg]	7.9

F RD 22 B5 DFU200 V5 6.72 90 B5 AU 25x50

VARVEL SpA | Via 2 agosto 1980 | Loc. Crespellano, 40053 Valsamoggia (BO) Italy | T +039 051 6721811 | F +039 051 6721825 | varvel@varvel.com